June 21, 1927. 1,632,788

R. M. DIENER

JACK BOX

Filed Dec. 1, 1924

Fig. 1.

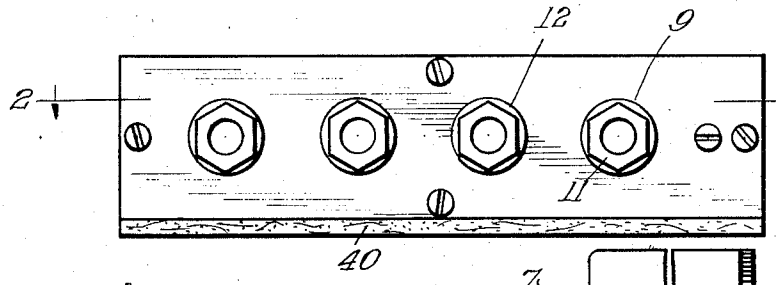

Fig. 6.

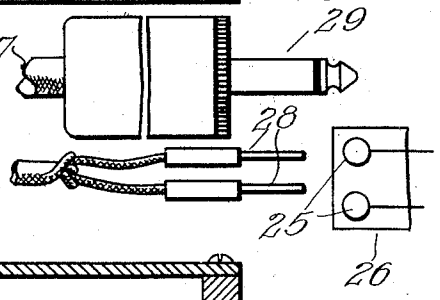

Fig. 2.

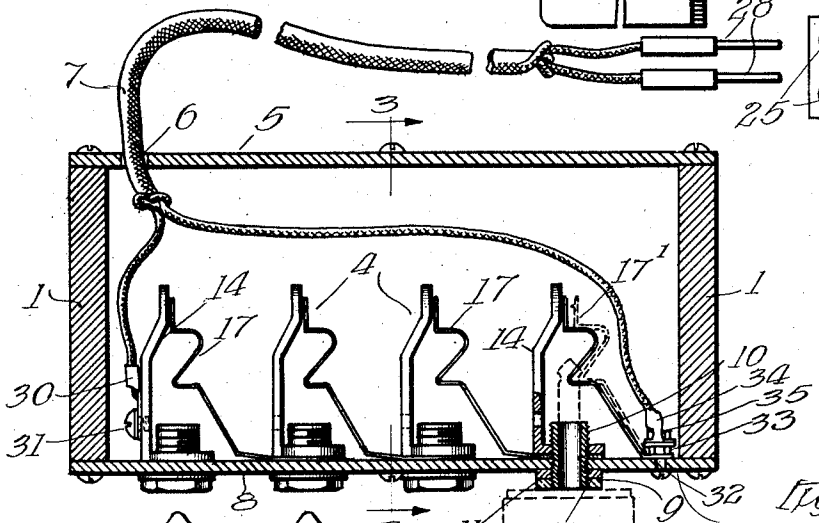

Fig. 4.

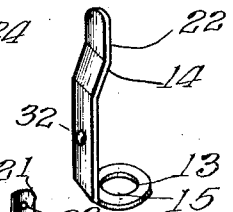

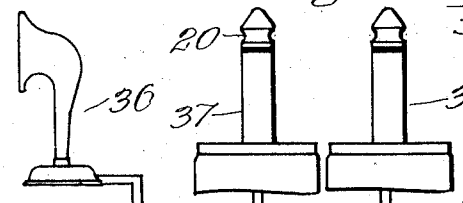

Fig. 3.

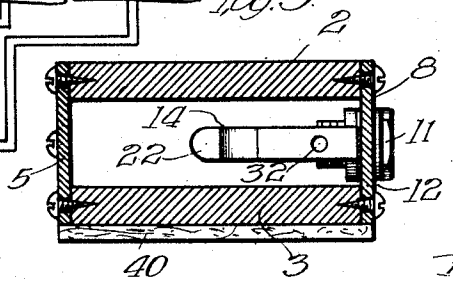

Fig. 5.

Witnesses:
W. P. Kilroy
Harry C. B. White

Inventor:
Riley M. Diener
Brown, Boettcher & Diener
Attys

By

Patented June 21, 1927. 1,632,788

UNITED STATES PATENT OFFICE.

RILEY M. DIENER, OF ELKHART, INDIANA, ASSIGNOR, BY MESNE ASSIGNMENTS, TO CHICAGO TELEPHONE SUPPLY COMPANY, OF ELKHART, INDIANA, A CORPORATION OF DELAWARE.

JACK BOX.

Application filed December 1, 1924. Serial No. 753,062.

My invention relates to telephony and more particularly provides a jack box used in connection with radio receiving instruments to permit a plurality of head telephones to be connected to the receiving instrument.

It is often desirable, in operating a radio receiving instrument, to permit several listeners to employ head phones which may be plugged in or cut out, as desired. It is also desirable at times to be able to listen in with the head phones while a station is tuned in for the loud speaker and then to disconnect the head telephones and permit the reception to proceed on the loud speaker.

According to my invention, I provide a simple and inexpensive structure for permitting the insertion of one or more receiving circuits into the telephone circuit of a radio instrument or the like.

I find that it is advisable to connect the instruments, that is, the telephone instruments, in series in the receiving circuit, particularly when employed in connection with the loud speaker, since with the two instruments in series, the noise on the head telephones is not excessive while the station is being tuned in, and then as soon as the proper tuning has been performed, the head telephones may be disconnected and the loud speaker operated alone either with further current or with the same amount of current as used when the head telephones were in series.

Likewise, I find that where a plurality of sets of head telephones are to be connected to the same receiving circuit, it is advisable to connect these head telephones in series rather than in parallel. When so connected in parallel, I find that the telephone of lowest resistance and inductance will rob other telephones of current, acting more or less as a short circuit upon the circuit. Where, however, the head telephones are all connected in series, satisfactory reception at each instrument is afforded and the loudness desired may be secured by throwing additional current or additional power upon the receiving circuit.

In order to make the structure as simple and inexpensive as is possible, I have arranged to use a minimum number of standard parts.

In order to acquaint those skilled in the art with the manner of constructing and operating a device embodying my invention and the advantages which may be secured thereby, I shall now describe in connection with the accompanying drawings a specific embodiment of the invention.

In the drawings, Fig. 1 is a front view of the jack box of my invention;

Fig. 2 is a horizontal section taken on the line 2—2 showing the structure of the jacks;

Fig. 3 is a cross section taken on the line 3—3 of Fig. 2;

Fig. 4 is an isometric view of one of the jack frames or brackets;

Fig. 5 is an isometric view of the jack spring; and

Fig. 6 is a side elevational view of a plug which is adapted for use in connection with a jack box of my invention.

As shown in the drawings, I provide a four-sided wooden box or frame having the ends 1, top 2 and bottom 3 for forming a housing for a series of jacks 4. The back of the housing is closed by a panel 5 of fiber, hard rubber, or, preferably, material marketed under the trade names of "bakelite" and "celoron". In this panel I provide an opening at 6 through which projects a flexible two-conductor cord 7.

At its front end, the housing is closed by a similar panel 8, having apertures through which project the threaded sleeve members 9, these sleeves being threaded as indicated at 10 and having hexagon shaped heads 11 by which they may be turned. Suitable washers 12 lie back of the hexagon heads 11 to permit the threaded sleeves 9 to be drawn up tight without marring the surface of the panel 8. Back of the panel 8 each sleeve 9 threads into the base or foot member 13 of a jack frame or bracket 14. The foot of the bracket or jack frame 14 has a threaded aperture 15 to which the threaded sleeve 9 projects, this foot member 13 serving as a nut for clamping the foot 16 of the jack spring member 17. The jack spring member 17 in each case is made of spring stock, the lower portion of which is enlarged, as indicated at 16, to form a foot, and having the opening 18 through which the threaded sleeve 9 may pass to clamp the spring to the back of the panel 8. The spring of one jack is held under the foot of the jack frame member of the adjacent jack. This spring

member 17 has a hump or sharp bend 19 which is adapted to drop into the groove 20 of a plug member with which it cooperates, the hump being of such character and position as to hold the outer end or tip 21 of the particular spring 17 out of contact with the outer end or tip 22 of the cooperating jack frame member 14. The tip 21 of the spring member 17 has a point formed thereupon, as by means of a sharp prick punch to give concentrated pressure upon the point for securing good electrical contact between the spring and its adjacent frame.

I have shown in dotted lines at 24, a plug member inserted in one of the jacks and have shown the spring 17 thereof as moved over to the right into dotted line position, so as to break the contact between the particular spring 17′ and its cooperating frame member 14. This, however, puts the plug 24 in series with the circuit so that an instrument connected to the plug may be inserted in series in the receiving circuit which includes the jacks 4, the cord 7 and the remainder of the receiving circuit indicated by the terminals 25 on the receiving set indicated at 26.

The cord 7 is shown as provided with the usual tips 28, but it is to be understood that this may be varied by substituting any other form of terminal such as spade clips or tips, or a plug such as indicated at 29 in Fig. 6, if so desired.

The front and rear panels 5 and 8 are held upon the frame by means of suitable wood screws. The cord 7 has spade tips at its inner end, one of the tips indicated at 30 being fastened under the machine screw 31 which is threaded into a hole 32 formed in the jack frame member 14, shown at the left of Fig. 2. Each one of these jack frame members is punched with a hole 32, but only the end one is threaded, since it is unnecessary to thread the intermediate frame member. The end jack spring, indicated at the right of Fig. 2, is fastened by means of the machine screw 32 and the clamping nut 33 which hold this particular spring element 17′ against the inside surface of the panel 8. The spade terminal 34 is held upon the machine screw 32 by the additional nut 34, so that these parts are all firmly in mechanical and electrical contact.

In the use of the device, the tips 28 are connected to the audiofrequency receiving circuit indicated at the terminals 25 so as to put the jack box in series in said receiving circuit. The loud speaker 36 is then connected in the circuit by means of the plug 37 by inserting said plug in the jack and forcing the spring 17 out of contact with the frame 14, said spring 17 making contact with the tip of the plug and the sleeve and frame being in electrical contact with the sleeve part of the plug. Now, if desired, the head telephones 38 may be connected in series for proper tuning and adjustment of the receiving circuit, as by means of the plug 39, which may be plugged into any one of the remaining jacks in series with the loud speaker 36. As soon as the circuit is properly tuned and adjusted, the plug 39 may be withdrawn and the loud speaker 36 remains in circuit. The degree of loudness of the reception may be adjusted in any of the well known ways now understood by those skilled in the art.

The box is preferably provided with a felt base indicated at 40, so that the same may be laid upon a finished surface without injury to the same.

While I have described my invention in connection with a particular embodiment, and more particularly in connection with a jack box, it is to be understood that the arrangement of jacks may be employed as a built in construction as part of a radio receiving set.

I do not intend to be limited to the details shown or described.

I claim:—

1. In a jack box, a housing, a panel for the front of the same, a plurality of threaded sleeves extending through the panel, jack frame brackets held by said sleeves and jack springs for each jack frame bracket held under the foot of the next adjacent jack frame bracket, said brackets and springs being connected in series.

2. In combination, a panel having a support and having a plurality of apertures, threaded jack sleeves passing through said apertures, said sleeves having heads, rigid L-shaped brackets having foot members threaded upon the sleeves, cooperating spring contact members having each a foot member clamped flat against the inside of the panel and being in contact with the next adjacent bracket foot member, each spring having a bend adapted to contact with and be held by the tip of a connecting plug.

3. A series of jacks connected in series in a receiving circuit comprising each an L-shaped jack frame member having a foot, a threaded sleeve for each jack for clamping the foot against a supporting panel, and diagonal spring members extending between the outer end of one jack frame member and the foot of an adjacent jack frame member, each spring having a portion adapted to be engaged by a plug for separating the outer end of the jack frame and its spring and for putting the plug in series in the circuit.

4. In combination, a relatively low box frame having a front panel, a series of jacks mounted on said front panel, each jack having an L-shaped jack frame member having a foot, a threaded thimble having a head outside of the panel, and threaded into the foot

of the adjacent jack frame member, and diagonal spring members extending between the foot of one jack frame member and the inner end of an adjacent jack frame member, and a cooperating plug adapted to engage the diagonal spring for moving the inner ends of the springs away from their cooperating jack frame ends.

5. In a jack box, a low housing having a front panel, a series of jacks mounted upon said front panel, each jack comprising a frame member and a thimble for holding the same and a cooperating spring engaging at its inner end the inner end of the jack frame and being held against the inside surface of the panel independently of said frame and thimble.

6. In combination, a panel, an L-shaped jack frame having a foot, a threaded thimble projecting through the panel, said thimble having a head on the outside of the panel, and a diagonal spring having a foot member lying under the foot member of the frame and clamped between the foot member of the frame and the inner surface of the panel.

7. In combination, a receiving circuit having a pair of circuit terminals, a panel, a plurality of series connected jacks comprising a plurality of jack frames and a plurality of jack springs normally in contact with said frames, means for clamping said jack frames and springs to said panel, the jack spring for the last jack being held to said panel by means independent of said last named means, one of said circuit terminals being connected to the frame of the first jack and the other to the independent holding means for the spring of the last jack, and plugs connected to separate pieces of electrical apparatus adapted to be associated with said jacks for connecting said apparatus in series with said circuit.

8. In combination, a panel having a plurality of jack openings, a plurality of jack frame members fastened to the panel, a plurality of jack spring members, there being one connected to each frame member, and fastening means for each frame member and its associated spring member for fastening said members to the panel adjacent the jack opening associated with the frame member, said spring members being arranged so that they are normally connected in series with the frame members.

9. In combination, a circuit having a pair of circuit terminals, a panel having a plurality of jack openings, a plurality of series connected jacks connected to the panel comprising a plurality of jack frame members fastened to the panel, a plurality of jack spring members, there being one connected to each frame member, and fastening means for each frame member and its associated spring member for fastening said members to the panel adjacent the jack opening associated with the frame member, said spring members being arranged so that they are normally connected in series with the frame members, one of said terminals being connected to the frame member of the first jack in the series and the other to the spring member of the last jack and plugs connected to separate pieces of electrical apparatus adapted to be associated with said jacks for connecting said apparatus in series with said circuit.

In witness whereof, I hereunto subscribe my name this 26th day of November, 1924.

RILEY M. DIENER.