(12) PATENT
(19) AUSTRALIAN PATENT OFFICE

(11) Application No. AU 199665513 B2
(10) Patent No. 725304

(54) Title
Balloon for decoration

(51)[6] International Patent Classification(s)
A63H 027/10

(21) Application No: 199665513 (22) Application Date: 1996.09.09

(43) Publication Date : 1998.03.12
(43) Publication Journal Date : 1998.03.12
(44) Accepted Journal Date : 2000.10.12

(71) Applicant(s)
Takara Kosan, Co., Ltd.

(72) Inventor(s)
Akira Nakamura; Takemi Morita

(74) Agent/Attorney
F B RICE and CO,605 Darling Street,BALMAIN NSW 2041

(56) Related Art
US 3416169
US 5036985
US 3676276

[Abstract]

Balloon units, each comprising plural pre-connected balloon elements, are used to make a decorative balloon assembly having a beautiful and well-balanced appearance.

A balloon unit (1) comprises globe-shaped balloon elements (2) linked annularly, and air passageways (3) each being provided at the connection between adjoining balloon elements (2), thereby internally connecting the balloon elements (2).

A decorative balloon assembly is formed of plural balloon units (1) with a rod (21) or a rope (31) passing through the center of respective balloon unit (1).

Any one of the balloon elements (2) constituting the balloon unit (1) is mounted with an air inlet valve (6) having a check valve structure, said valve (6) projecting toward the center hole (7) in the center sheet (4).

AUSTRALIA

Patents Act 1990

TAKARA KOSAN, CO., LTD.

ORIGINAL

COMPLETE SPECIFICATION
STANDARD PATENT

Invention Title:

Balloon for decoration

The following statement is a full description of this invention including the best method of performing it known to us:-

【Detailed explanation of the invention】

The present invention relates to a balloon for use as a decoration. In particular, the invention relates to a balloon unit for use as a component in a balloon decoration assembly.

Techniques have been developed for producing balloon decorations of various types by attaching many globe-shaped balloons onto a rod or a rope. For example, a well-known balloon decoration is made up of balloon units, each consisting of four balloon elements connected annularly on the same plane. These balloon units are joined at the center on a rod or a rope so as to form a vertical or arch-shaped decoration.

According to the conventional technique, four balloons are bound together with the air seals facing inward. Producing this balloon decoration is a troublesome operation, which requires dexterity to fasten the balloons together to achieve a good balance.

Thus, it is difficult to produce balloon decoration assemblies simply and speedily using the conventional technique.

An object of the present invention is to provide a decorative balloon unit which simplifies and facilitates the production of a balloon decoration assembly having a beautiful and well-balanced appearance.

According to the present invention, there is provided a decorative balloon assembly, comprising:

a plurality of balloon elements coupled in an integral annular arrangement;

a plurality of air passageways, each air passageway linking two adjacent balloon elements;

a centre sheet located in an inner portion of the annular arrangement, the centre sheet having a shape defined by inner edges of the balloon elements and by inner edges of the air passageways, the centre sheet including a central hole;

wherein the plurality of balloon elements and the plurality of air passageways form a balloon unit, and wherein a plurality of balloon units are connectable by passing an elongated connecting member through the central openings of each balloon unit.

The plural balloon units are assembled to make a balloon decoration by passing a rod, rope, or other connector through the centre of the balloon units, that is, through the inner portion of the annular arrangement of balloon elements. Respective balloon elements are interconnected by a centre sheet which is provided in a space defined by the air passageways. Side sheets, located on the outsides of the balloon elements and air passageways, may also be included to provide more stability in the balloon unit construction.

Thus, in a related aspect, the invention provides a decorative balloon assembly, comprising:

a plurality of balloon elements coupled in an integral annular arrangement, each balloon element including a plurality of passageways each air passageway linking two adjacent balloon elements, a centre sheet located in an inner portion of the annular arrangement and defining a central hole, wherein the plurality of balloon elements and the plurality of air passageways form a balloon unit, and wherein a plurality of balloon units are connected by an elongated connecting member passing through an inner portion of the annular arrangement of each balloon unit to define the balloon assembly.

AUSTRALIAN PATENT OFFICE

The balloon unit an air inlet valve typically having a check valve structure is provided at one of the balloon elements. In a preferred embodiment, the valve projects toward a centre hole in the centre sheet. A rod used as a connector may be inserted through this centre hole. A seal may be attached to the centre sheet. The seal has a central opening for accommodating a connecting rope.

AUSTRALIAN PATENT OFFICE

Figure 1 is a perspective view of a balloon unit.

Figure 2 is a top view of the balloon unit of Figure 1.

Figure 3 is an enlarged view of a center sheet of the balloon unit.

Figure 4A and 4B are sectional views taken along lines A-A and B-B of Figure 2, respectively.

Figure 5A is a top view of a film forming the balloon unit, and Figure 5B is a top view of a mold for the film.

Figure 6 is a side view of a first balloon decoration assembly.

Figure 7 is a partially sectional view of the assembly shown in Figure 6.

Figure 8 is a side view of a second balloon decoration assembly.

Figure 9A is a sectional view showing a portion of the assembly shown in Figure 8, and Figure 9B is a perspective view of a seal with a central opening.

As shown in Figure 3, air is supplied into the balloon unit 1 through an air inlet valve 6. The air entering the inlet valve 6 starts to inflate a balloon element 2A mounted with the air valve 6, and then it inflates adjacent balloon elements 2B, and finally a balloon element 2C. The air preferably is supplied through the air inlet valve 6 by air filling equipment not shown. The air inlet valve 6 has a check valve structure, and therefore the air stays within the balloon even when the filling equipment is removed.

As shown in Figures 1 and 2, the balloon unit 1 is formed such that the balloon elements, each of substantially the same diameter, are linked in an annular arrangement when all the balloon elements are inflated, creating an integral construction.

The first balloon decoration assembly 20 shown in Figures 6 and 7 comprises balloon units 1 joined together at the center by a rod 21, which is fitted in the central hole 7 in the center sheet 4 of each of the balloon units 1.

The second balloon decoration assembly 30 shown in Figures 8 and 9 comprises balloon units 1 joined together at the center by a rope 31, which passes through a central opening 33 formed in a seal 32 attached to the center sheet 4 of each of the balloon units 1.

According to the present invention, the balloon decoration assembly has a pleasant appearance, the balloon elements 2 being lined up in an orderly manner when plural balloon units 1 are assembled together. Further, because the respective balloon elements 2 are internally connected by the air passageways 3, the air inlet valve 6 may be provided at only one of the balloon elements 2. Consequently, the invention facilitates the inflation of the balloons while simplifying and expediting interconnection of the balloon units.

With reference to Figure 1, 2, 3, and 4, a balloon unit 1 includes four globe-shaped balloon elements 2 which are annularly linked by air passageways 3 through which the adjoining balloons are internally connected.

The above-mentioned four balloon elements 2 are provided with a center sheet 4 in a space defined by connections where the air passageways 3 are provided. The center sheet 4 thus interconnects the balloon elements 2. Side sheets 5 are also provided, connected to the outer edges of the balloon elements. Therefore, the four balloon elements 2 are firmly fastened together by the center sheet 4 and side sheets 5.

An air inlet valve 6 for supplying air into the balloon elements 2 of the balloon unit 1 is attached to one of the balloon elements. The air inlet valve 6 has a check valve structure, and as shown in Figure 3, an uppermost end portion of the valve 6 is inserted within the balloon element 2A while an air inlet end portion projects outward from the balloon element 2A. In this embodiment, the air inlet of the valve 6 projects toward the inner portion of the annular arrangement, and particularly toward the center hole 7 formed in the center of the center sheet 4. When air is supplied into the air inlet valve 6, the air starts to inflate the balloon element 2A having the valve inserted therein, and then flows through the air passageways 3 into the adjacent balloon elements.

The air inlet valve 6 may be attached at any part of the balloon element 2, but as described hereinafter in detail, it is preferably provided so as to project toward the center hole 7 in the center sheet 4. Such placement of the air inlet valve 6 preserves the overall aesthetic appearance of the balloon decoration assembly by providing concealment for the air inlet valves 6 when the balloon decoration assembly is assembled.

As shown in Figure 5A, the balloon unit 1 of this embodiment includes two synthetic resin films 10A and 10B. The two films 10 are attached along a connection line 12 which is formed at an outer circumferential edge of four circular portions 11. The films 10 are also attached along a connection line 16 formed at an inner circumferential edge of the four circular portions 11. The centers of the films surrounded by the circular portions 11 are also attached along the center connection line 14. After the films are joined along the lines 12, 14, and 16, the balloon unit 1 is separated from the excess film by a mold 15, shown in Figure 5B, having an outline corresponding to the

circular portions 11 and center line 14. Aluminum may be applied to the surface of the films 10 by vacuum evaporation to improve resistance to air leakage and/or apply print or color.

When the balloon unit 1 is separated from the excess film, the circular portions 11 become balloon elements 2, the gaps 13 in the connection line 12 become air passageways 3, and the inside of the center connection line 14 becomes the center hole 7 of the balloon unit 1.

A first embodiment of the balloon decoration assembly using the above-mentioned balloon unit 1 is now described. Referring to Figures 6 and 7, the first balloon decoration assembly includes a number of balloon units 1 fitted onto a rod 21. As shown in Figure 7, the rod 21 passes through the center hole 7 of each balloon unit 1.

As the balloon units 1 are mounted on the rod 21, each successive balloon unit 1 is turned 90 degrees. Though the air inlet valve 6 projects toward the center hole 7 of the center sheet 4 of each balloon unit 1, not filled with air at the portion, the valves will not be damaged by the rod 21 passing through the hole.

By applying a different color on one or two balloon elements of the balloon unit 1, and shifting the angle when placing the balloon units on the rod, the balloon decoration assembly 20 looks as if the balloons are connected spirally, thereby improving the decorative effect. When assembled, the rod 21 is fixed to a stand 22 to add stability.

A second embodiment of the balloon decoration assembly 30 shown in Figures 8 and 9 includes the balloon units 1 joined together by a rope 31. As shown in Figure 9B, to the center hole 7 of the balloon unit 1 is attached a seal 32 having a central opening 33 for the rope 31 to pass through. Figure 9A shows the rope 31 inserted through the opening 33 of the seal 32.

As in the first embodiment of the balloon decoration assembly 20 described previously, the second embodiment of the assembly 30 may have some balloon elements painted with a different color so as to enhance the decorative effect. Because the second balloon decoration assembly 30 uses a rope to attach the balloon units 1 in a flexible arrangement, it may be hung from a ceiling to arrange the balloons in an arch shape. It is also contemplated that other means of connecting the balloon units 1 and displaying the balloon decoration assembly are possible.

THE CLAIMS DEFINING THE INVENTION ARE AS FOLLOWS:-

1. A decorative balloon assembly, comprising:

a plurality of balloon elements coupled in an integral annular arrangement;

a plurality of air passageways, each air passageway linking two adjacent balloon elements;

a centre sheet located in an inner portion of the annular arrangement, the centre sheet having a shape defined by inner edges of the balloon elements and by inner edges of the air passageways, the centre sheet including a central hole;

wherein the plurality of balloon elements and the plurality of air passageways form a balloon unit, and wherein a plurality of balloon units are connectable by passing an elongated connecting member through the central openings of each balloon unit.

2. The decorative balloon assembly of claim 1, wherein the plurality of balloon elements, the plurality of air passageways, and the centre sheet are formed from sheets of synthetic resin film.

3. The decorative balloon assembly of any preceding claim, wherein the elongated connecting member is a rope.

4. The decorative balloon assembly of claim 1 or claim 2, wherein the elongated connecting member is a rod.

5. The decorative balloon assembly of any preceding claim, further comprising a plurality of side sheets coupled to outer edges of the balloon elements and to outer edges of the air passageways.

6. The decorative balloon assembly of any preceding claim, further comprising an air inlet coupled to one of the plurality of balloon elements.

7. The decorative balloon assembly of claim 6, wherein the air inlet has a check valve.

8. The decorative balloon assembly of claim 6, wherein an inlet end of the air inlet faces the central hole.

9. The decorative balloon assembly as described in any preceding claim, wherein the centre sheet includes a seal or reinforcing insert defining a hole.

10. A decorative balloon assembly, comprising:

a plurality of balloon elements coupled in an integral annular arrangement, each balloon element including a plurality of passageways each air passageway linking two adjacent balloon elements, a centre sheet located

AUSTRALIAN PATENT OFFICE

in an inner portion of the annular arrangement and defining a central hole, wherein the plurality of balloon elements and the plurality of air passageways form a balloon unit, and wherein a plurality of balloon units are connected by an elongated connecting member passing through an inner portion of the annular arrangement of each balloon unit to define the balloon assembly.

11. The decorative balloon assembly of claim 10, wherein the elongated connecting member is a rope.

12. The decorative balloon assembly of claim 10, wherein the elongated connecting member is a rod.

13. The decorative balloon assembly of claim 10, 11, or 12, further comprising a plurality of side sheets coupled to outer edges of the balloon elements and to outer edges of the air passageways.

14. The decorative balloon assembly of any one of claims 10 to 13, wherein the plurality of balloon elements, the plurality of air passageways, the centre sheet, and the side sheets are formed from sheets of synthetic resin film.

15. The decorative balloon assembly of any of claims 10 to 14, further comprising an air inlet coupled to one of the plurality of balloon elements.

16. The decorative balloon assembly of claim 15, wherein the air inlet has a check valve.

17. The decorative balloon assembly of claim 15 or 16, wherein an inlet end of the air inlet is directed towards the hole.

18. A decorative balloon assembly substantially as hereinbefore described with reference to the accompanying drawings.

Dated this second day of August 2000

Takara Kosan, Co., Ltd.
Patent Attorneys for the Applicant:

F B RICE & CO

AUSTRALIAN PATENT OFFICE

Fig. 1

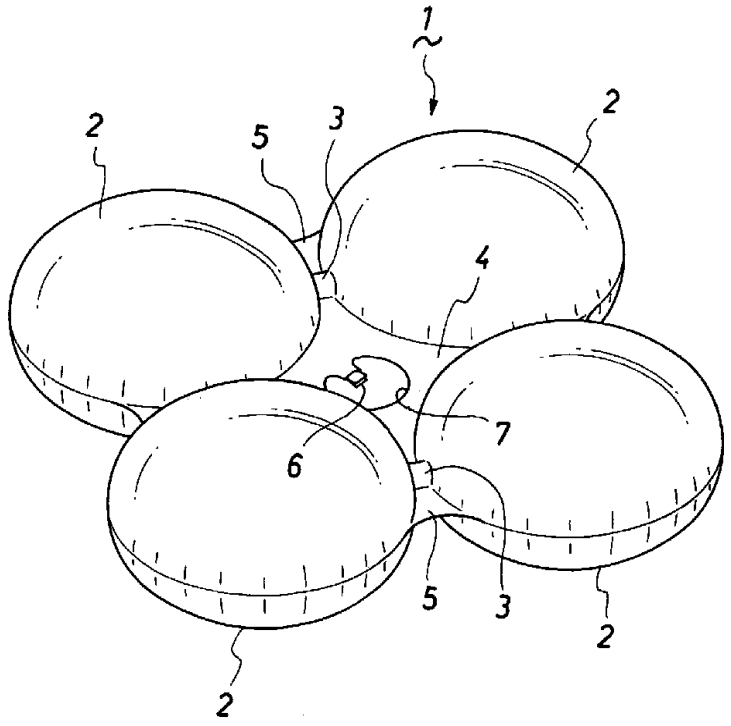

Fig.2

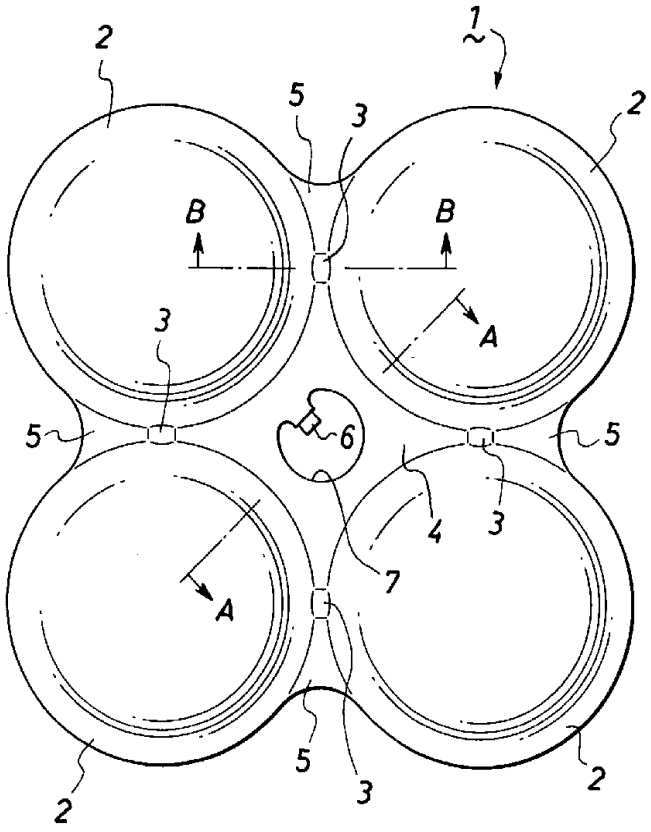

Fig.3

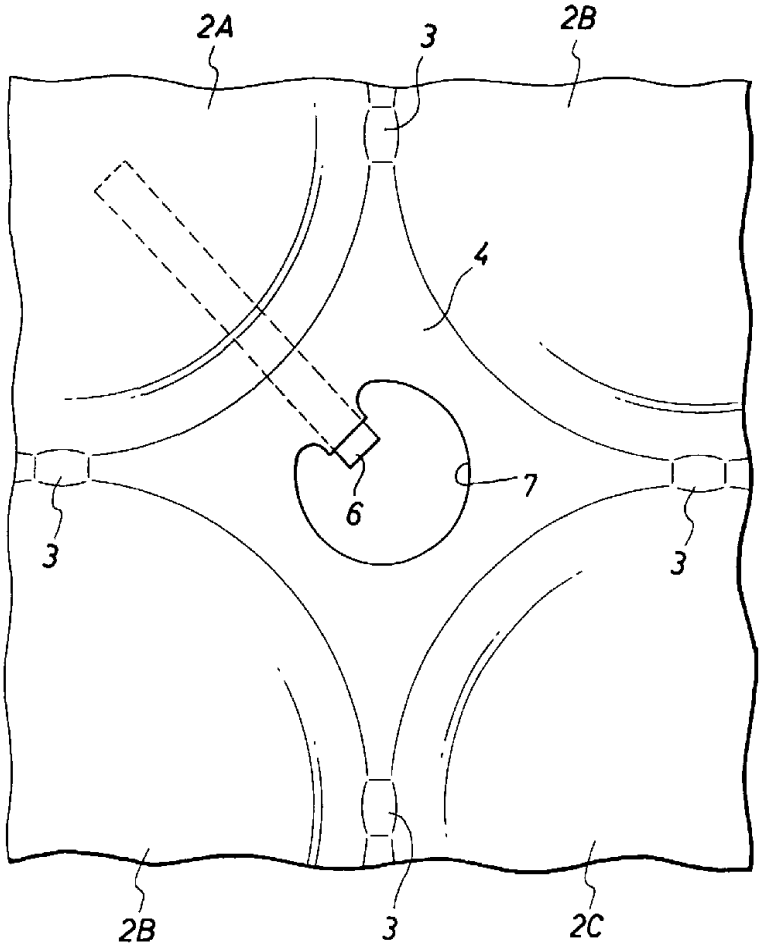

Fig.4A

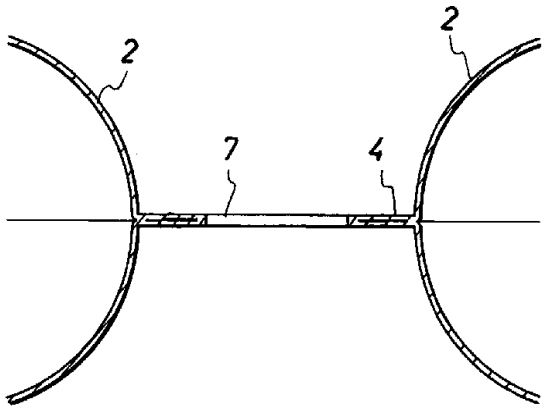

Fig.4B

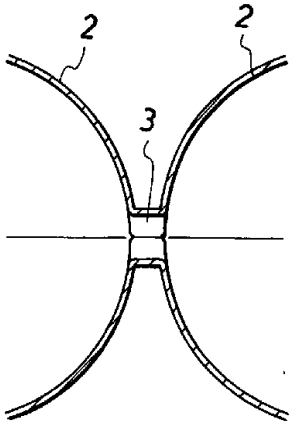

Fig.5A

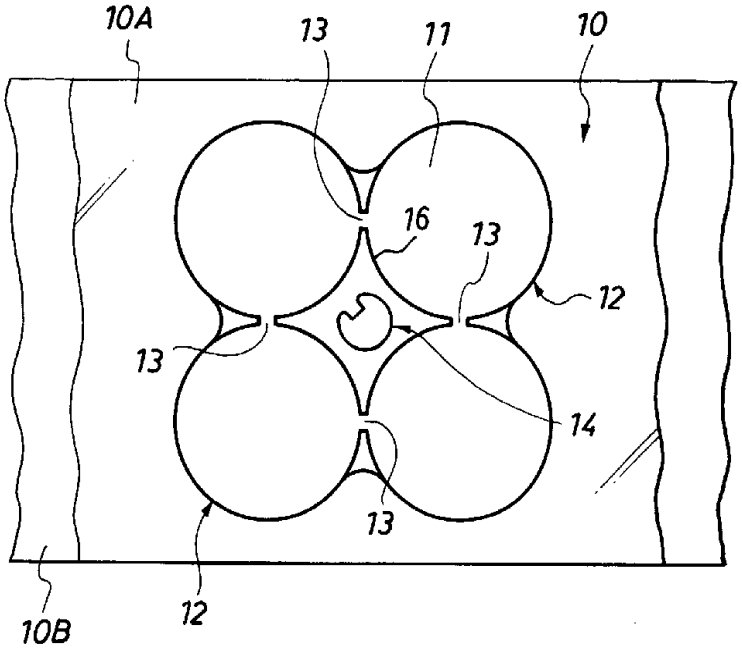

Fig.5B

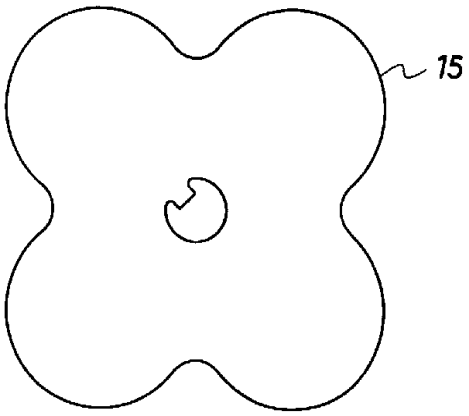

Fig.6

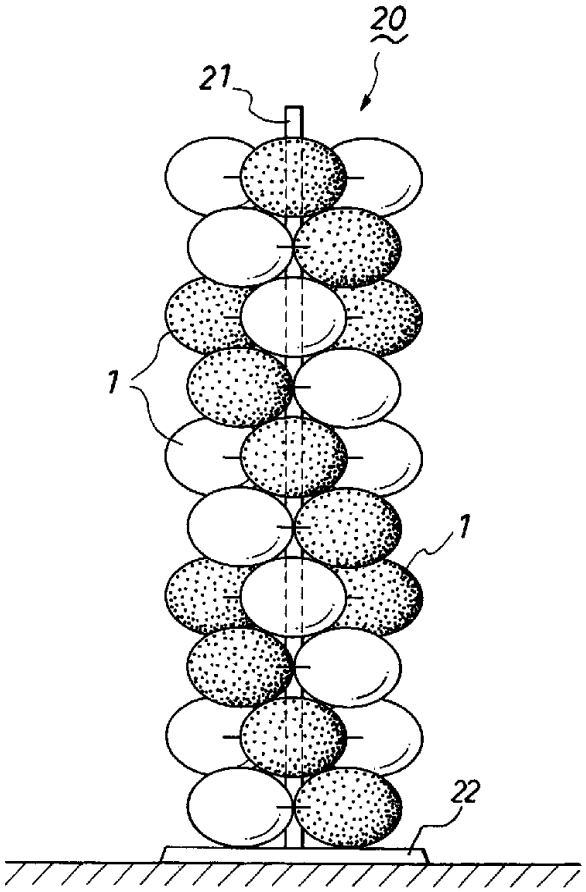

Fig.7

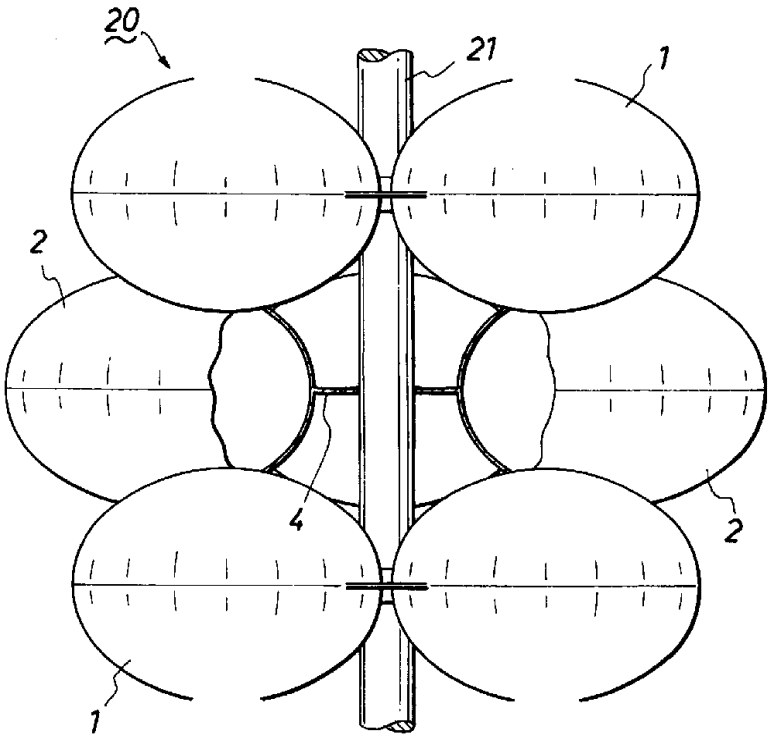

Fig.8

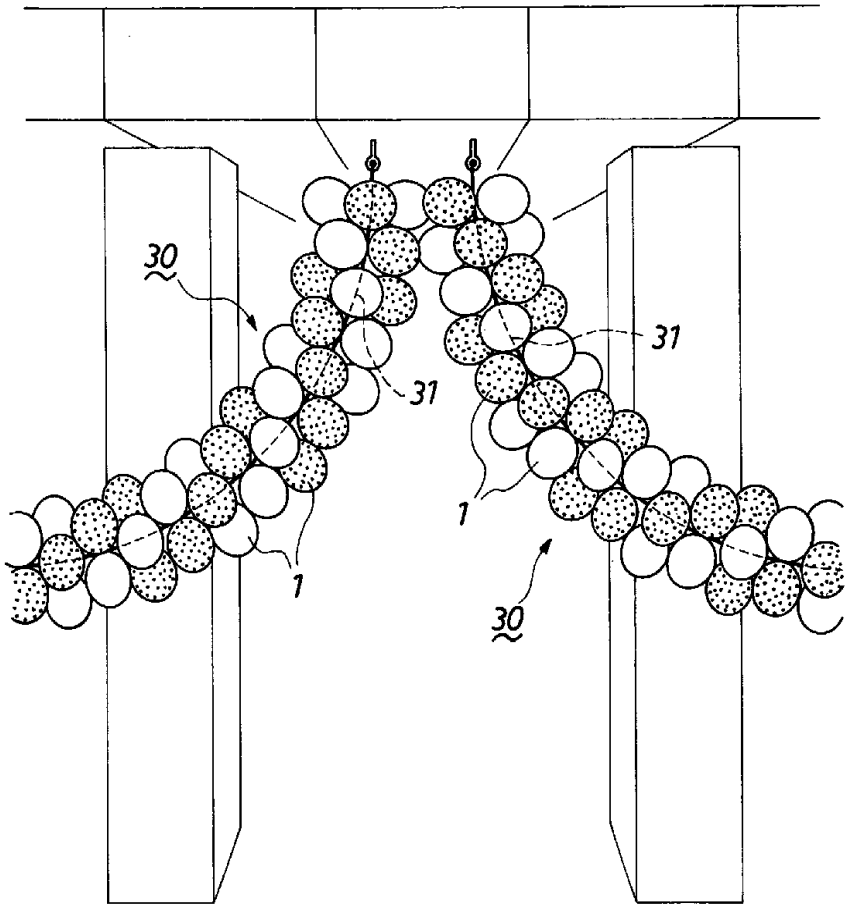

Fig.9A

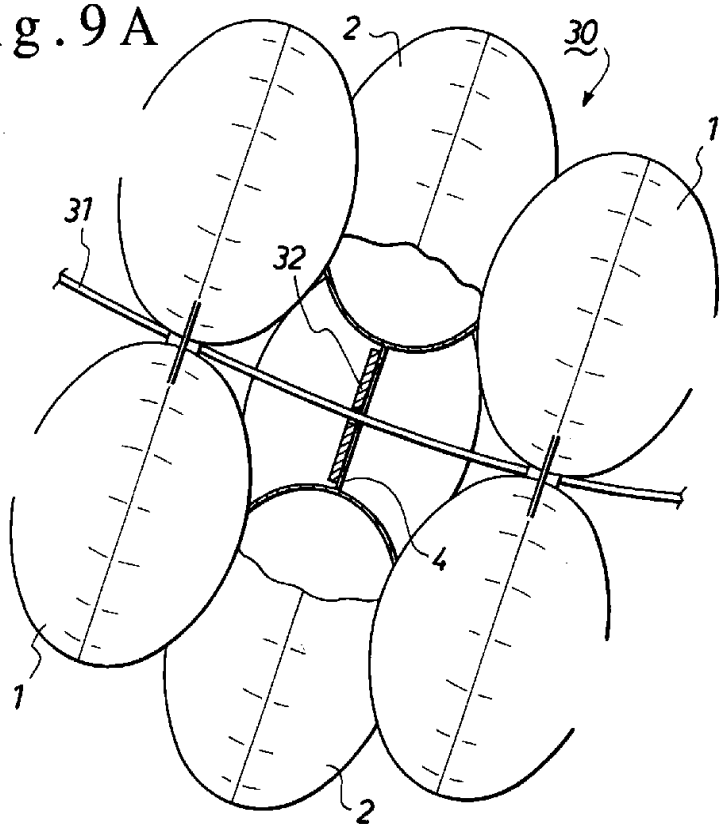

Fig.9B

