S. GORDON.

ADJUSTABLE STOOL FOR SHOE STORES.

APPLICATION FILED JAN. 22, 1913.

1,068,496.

Patented July 29, 1913.

2 SHEETS—SHEET 1.

Fig. 1.

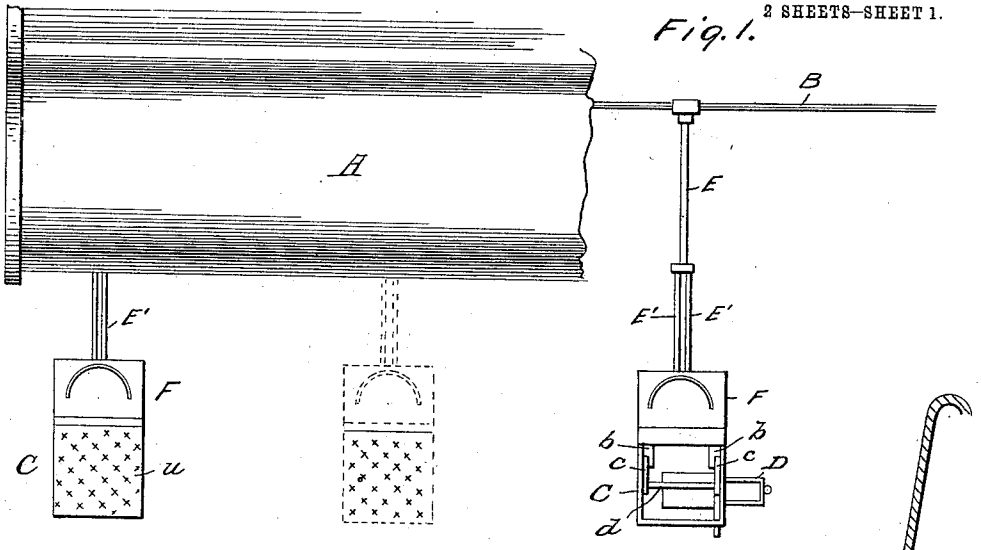

Fig. 2.

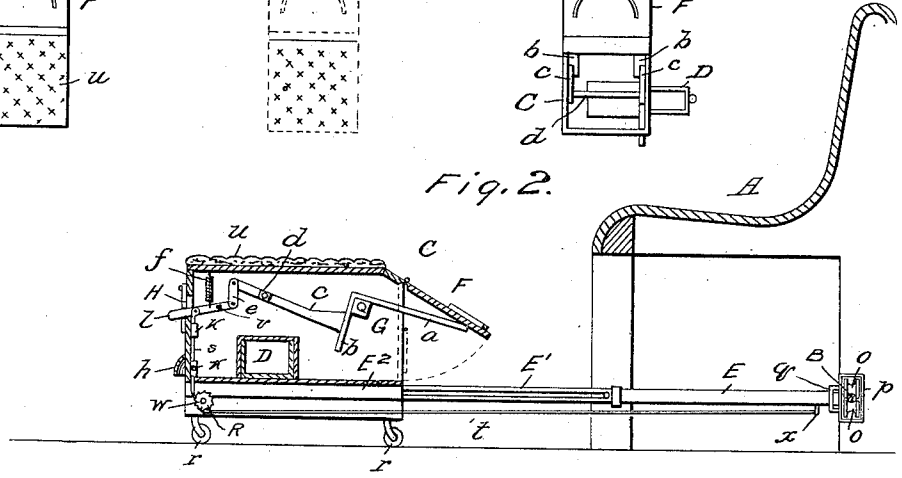

Fig. 3.

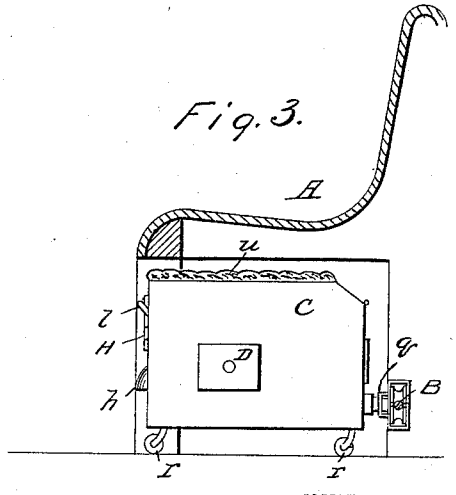

Fig. 4.

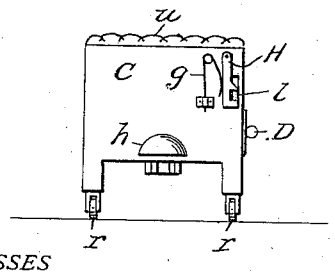

WITNESSES

E. C. Duffy

A. R. Stanton.

INVENTOR:

Simon Gordon

By Edw. W. Byrn. Attorney

COLUMBIA PLANOGRAPH CO., WASHINGTON, D. C.

S. GORDON.

ADJUSTABLE STOOL FOR SHOE STORES.

APPLICATION FILED JAN. 22, 1913.

1,068,496. Patented July 29, 1913.

2 SHEETS—SHEET 2.

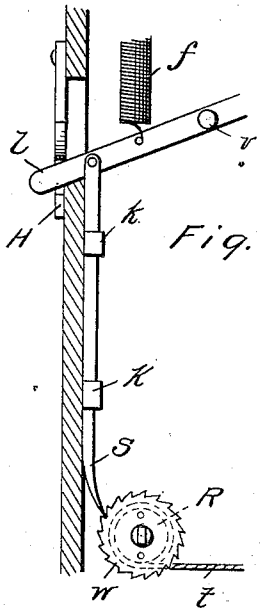

Fig. 7.

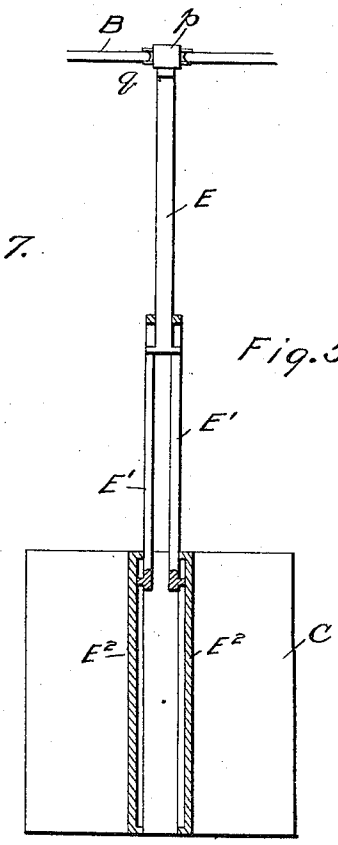

Fig. 5.

Fig. 6.

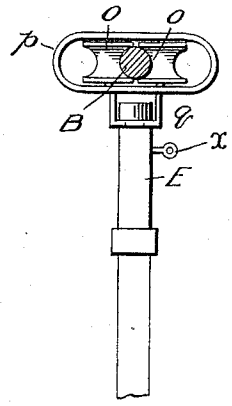

Fig. 8.

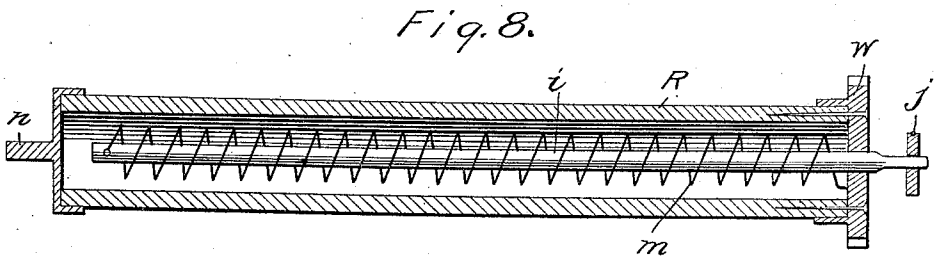

WITNESSES

C. C. Duffy

A. R. Stanton

INVENTOR:

Simon Gordon.

By Edw. W. Byrn.

Attorney

COLUMBIA PLANOGRAPH CO., WASHINGTON, D. C.

UNITED STATES PATENT OFFICE.

SIMON GORDON, OF WASHINGTON, DISTRICT OF COLUMBIA.

ADJUSTABLE STOOL FOR SHOE-STORES.

1,068,496. Specification of Letters Patent. Patented July 29, 1913.

Application filed January 22, 1913. Serial No. 743,682.

To all whom it may concern:

Be it known that I, SIMON GORDON, a citizen of the United States, residing at Washington, in the District of Columbia, have invented certain new and useful Improvements in Adjustable Stools for Shoe-Stores, of which the following is a specification.

For the use of salesmen in shoe stores, stools have been provided bearing a foot rest upon which the customer's foot is placed while being fitted with shoes. Such stools, however, are very objectionable, especially when the store is crowded, as they occupy floor space and are in the way of the customers, and it has happened that dealers have been sued for damages by customers who have fallen over such low stools on the floor.

The object of my invention is to provide an adjustable stool of this character which can be pushed out of the way under the bench after the customer is served, and be conveniently pulled out again when needed, and which may be slid longitudinally along the bench to the position of the customer, as will be hereinafter fully described with reference to the drawing, in which:

Figure 1 is a plan view of a shoe store bench partly broken away with two of my stools connected thereto and drawn out for use, one being in top plan view and the other with the cushion seat removed. Fig. 2 is a view looking lengthwise the bench, with the stool drawn out and in vertical longitudinal section and the foot rest extended. Fig. 3 is a view looking lengthwise the bench with the stool and foot rest folded and pushed under the bench and out of the way. Fig. 4 is an elevation of the outer face of the stool. Fig. 5 is an enlarged plan view of an extension slide for the stool. Fig. 6 is an enlarged side detail of the trolley connection between the extension slide and a longitudinal rail under the bench. Fig. 7 is an enlarged section detail of a stop device for locking a spring roller to any desired position and determining the adjustment to which the stool is to be pulled out, and Fig. 8 is a longitudinal section of a spring roller which through a cord or strap pulls the stool automatically back under the bench when released by the salesman.

Referring to Figs. 1, 2, 3, 4, A is the shoe store bench or settee, under which there is arranged near the floor a longitudinal rail or rod B extending the full length of the bench and supported either upon the back legs of the bench, as shown, or upon standards rising from the floor, or in any other suitable manner, as a fixture at the back part of the bench and underneath the same near the floor. On this rod rail there runs a trolley consisting, see Fig. 6, of upper and lower concave rollers *o*, *o*, held in a bowed frame *p* and having a swiveling connection *q* with the inner extension slide member E of a series of slide members E, E′, E², Fig. 5, in the place of which also I may use any other form of extension slide, if desired. The outer members E² of the extension slide are fastened rigidly to the bottom of the salesman's stool C. This stool may be of any desired shape, but is preferably in the form of a rectangular box, see Figs. 1 to 4, mounted upon legs bearing caster rollers *r* at their lower ends and having a cushioned top *u* for the salesman to sit on.

At the front part of the stool, next to the bench, there is a hinged and adjustable foot rest F, Fig. 2, hinged to the upper part of the stool and capable of being elevated and extended to the inclined position shown for receiving the foot, or be dropped down to a vertically pendent position, as shown in dotted lines. This foot rest is lifted by an elbow *a b* on each side which elbows are rigidly connected to a horizontal rocking bar G journaled in the sides of the box. A lever *c* is fulcrumed at *d* and has at one end a foot that bears against the arm *b* of the elbow and on the other side of the fulcrum is pivotally connected by a link *e* to a latch bar *l* which extends through a vertical slot in the outer side of the box, as shown in Figs. 2 and 4.

H is a catch pivoted to the box at its upper end and having a notch at its lower end that receives the end of the latch bar *l*, a spring *g* serving to force this catch over the latch bar and hold it down when depressed.

A spring *f*, Fig. 2, tends to pull the latch bar up. When the latch bar *l* is forced down, the spring *f* is put under tension and a link *e* forces the adjacent end of lever *c* up and its forward end or foot, in moving down, presses on arm *b* of the elbow and in rocking the bar G lifts the arm *a* and raises the foot rest F. This foot rest is maintained in this position at will, and when it is to be released and dropped down, the catch H is drawn away from the latch bar and the latter then responding to the tension of

spring *f* lifts the foot of lever *c* and allows the foot rest F to fall. There are two levers *c* and two arms *b*, one on each side of the box, as seen on the right of Fig. 1, the two being operated in unison by having the levers *c c* rigidly connected to the fulcrum axis *d* either by being cast with it, or keyed to it, or connected by a square hole or in any other way.

D is a drawer arranged in the box of the seat to pull out at one side of the same. This is designed to receive the shoe salesman's implements, such as button hook, shoe horn, brush, rag and soapstone box, forming a convenient kit of tools.

Underneath the front of the box and at right angles to the extension slide is arranged a spring roller. On this is wound a cord or strap *t* fastened to the roller at one end and extending to and fastened at *x* to the inner end of the extension slide. This spring roller by winding up the cord draws the stool, when released, underneath the bench to the position shown in Fig. 3. When the stool is pulled out by handle *h*, the tension on the cord rotates the roller and winds up the spring within the same. The roller is held against back movement by a stop detent *s*, Figs. 2 and 7. This is in the nature of a vertical bolt arranged to slide in keepers *k k* inside the front wall of the box and the lower end of which is made in the form of a tooth which engages a ratchet wheel *w* fixed rigidly on the roller. The upper end of this stop detent is pivotally connected to the latch bar *l* so that when the latch bar is thrown down to extend the foot rest the same movement thrusts the tooth of the stop detent into engagement with the ratchet wheel of the roller, thereby locking the stool in any desired adjustment either close to the bench for a child or farther from it for an adult. This stop detent *s*, it will be seen, is under the influence of the same spring *f* that lifts the latch *l*, so that, when the latch is released to drop the foot rest, the stop detent *s* releases the roller and the stool is automatically folded and returned to its position under the bench. The locking of the stool away from the bench, it will be seen, may take place at any point to accommodate the short legs of a child or the long legs of an adult and the locking action and extension of the foot rest are effected simultaneously and conjointly.

The spring roller R, which is shown in enlarged detail in Fig. 8, is hollow, carries at one end a trunnion *n* which turns in a bearing and at the other end has the ratchet wheel. A central rod *i* with a flattened end is held against rotating in a slotted holder *j*. A long coil spring *m* is secured at its inner end to the rod *i* and at the other end is connected to the ratchet wheel *w* which is rigidly connected to the roller, so that when the roller is revolved by drawing the stool out the spring is wound up.

It will be seen from the foregoing that my invention provides in one device a salesman's stool, foot rest and kit of tools; that the device is adjustable to any position in or out and also lengthwise the bench; that it is conveniently pulled out and automatically folded and returned to a position beneath the bench, where it does not occupy floor space in the path of the customers. Furthermore, the extension slide being connected to the lower part of the stool and to an anchorage near the floor and near the back part of the customer's bench, such slide is below and out of the way of the foot rest in folding and the customer may readily step over said slide in getting on and off the store bench. It will be understood that the bench or customer's seat is entirely open at the front, as seen in Fig. 2, and the salesman's stool, which is the basic support of the foot rest, is of less height than this open space, and the entire width of the stool, with foot rest F when folded, is less than the width of the customer's bench so that the salesman's stool and foot rest may be entirely concealed thereunder, as seen in Fig. 3 and may be adjusted longitudinally under the store bench while under the same.

In carrying out my invention I may make many changes in the details without departing from my invention as set forth in the claims.

I claim:

1. An adjustable salesman's stool and foot rest, comprising a box having a hinged shelf to form a foot rest on one side, means for raising the same, an extension slide for the stool, a spring roller carried by the stool and provided with flexible connection for drawing the stool under the store seat, and a stop device for the spring roller, said stop device and means for projecting the foot rest being connected for simultaneous and conjoint operation.

2. A combined salesman's stool and foot rest, comprising a box with hinged extensible foot rest, an elbow with rocking bar journaled in the sides of the box and operating on the hinged foot rest, a lever operating on said elbow, a latch bar operating on the lever, a spring for retracting the latch bar, and a locking catch for the latch.

3. A combined salesman's stool and foot rest, rollers for the same, an extension slide connecting the stool to an anchorage beneath the customer's seat, a flexible connection for the same, a spring roller on which the flexible connection is wound, said spring roller being carried by the stool and having a ratchet wheel at one end rigidly connected to the roller, an axial rod in the roller having one end adapted for rigid lock against

rotation, and a spiral spring connected at one end to said axial rod and at the other end to the ratchet wheel and roller.

4. The combination with a salesman's stool, of an extensible foot rest connected thereto, mechanism carried by the stool for extending the foot rest, means for moving the stool bodily over the floor, and a locking device for said stool-moving means, said locking device being connected also to the foot rest extending mechanism for conjoint action.

5. A store bench having an open front, a longitudinal rail under the back part of the same near the floor, an adjustable salesman's stool and foot rest, and an extension slide connecting the stool to the rail, said stool being adapted to be moved underneath and out from the bench and also longitudinally under the bench while housed beneath the same.

In testimony whereof I affix my signature in presence of two witnesses.

SIMON GORDON.

Witnesses:
E. C. DUFFY,
M. E. DILLER.

Copies of this patent may be obtained for five cents each, by addressing the "Commissioner of Patents, Washington, D. C."