(12) UK Patent Application (19) GB (11) 2 271 427 (13) A

(43) Date of A Publication 13.04.1994

(21) Application No 9320805.6

(22) Date of Filing 08.10.1993

(30) Priority Data
(31) 4233849 (32) 08.10.1992 (33) DE

(71) Applicant(s)
Walz Elektronik GmbH

(Incorporated in the Federal Republic of Germany)

Walddorfer Str.40, D-72184 Rohrdorf,
Federal Republic of Germany

(72) Inventor(s)
Klaus Grabmaier
Volker Walz

(74) Agent and/or Address for Service
R G C Jenkins & Co
26 Caxton Street, LONDON, SW1H ORJ,
United Kingdom

(51) INT CL[5]
A61M 13/00 , G01L 9/00

(52) UK CL (Edition M)
G1N NEND N30PX

(56) Documents Cited
None

(58) Field of Search
UK CL (Edition L) G1N NEND
INT CL[5] A61B , A61M 13/00
Online database :WPI

(54) Insufflation apparatus

(57) A medium is insufflated into a body cavity through a conduit (13) having a valve (15) and a restrictor (14). The valve (15) blocks the conduit (13) during a measuring phase at the start of a cycle, so that the pressure P_{ACT} in the body cavity can be determined. During the following filling phase of a cycle, the flow, F_{ACT} is determined from the pressure difference across the restrictor (14). A generator device generates a $\bar{F}_{DES}$ signal which represents the prescribed average flow during a cycle. When equality of F_{ACT} and $\bar{F}_{DES}$ is reached, a coincidence module (33) is tripped to end the filling phase and start a new cycle. Thus the length of the filling phases varies in the manner of pulse width control. Initially, $\bar{F}$max is output as $\bar{F}_{DES}$ via a selector module (29), resulting in quick filling. At the end, an $\bar{F}$ which becomes smaller with smaller ΔP (=P_{DES} - P_{ACT}) is output as $\bar{F}_{DES}$, so that the DESIRED pressure of the body cavity is reached gently.

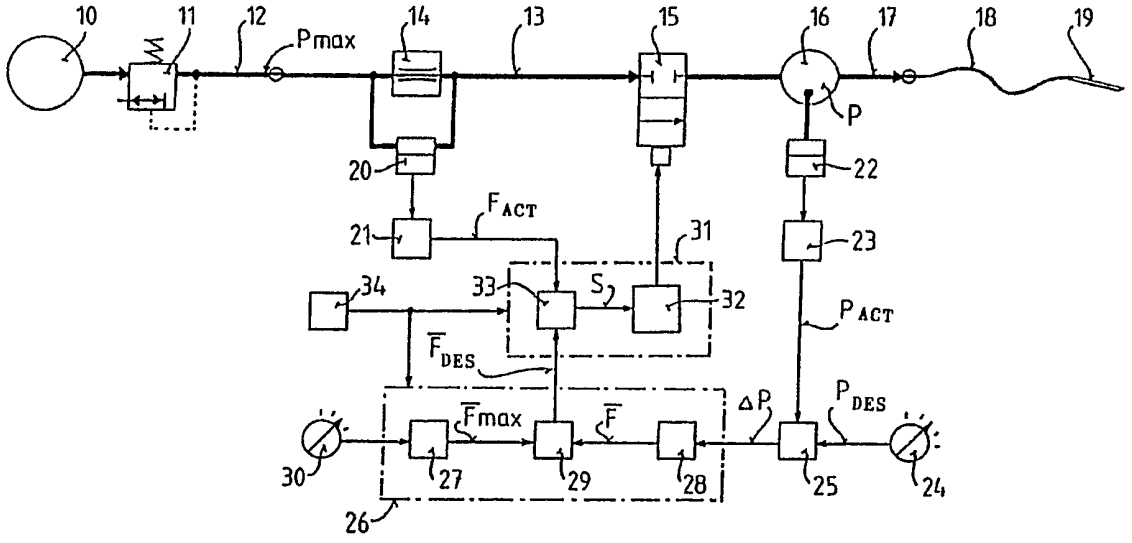

Fig.1

GB 2 271 427 A

At least one drawing originally filed was informal and the print reproduced here is taken from a later filed formal copy.

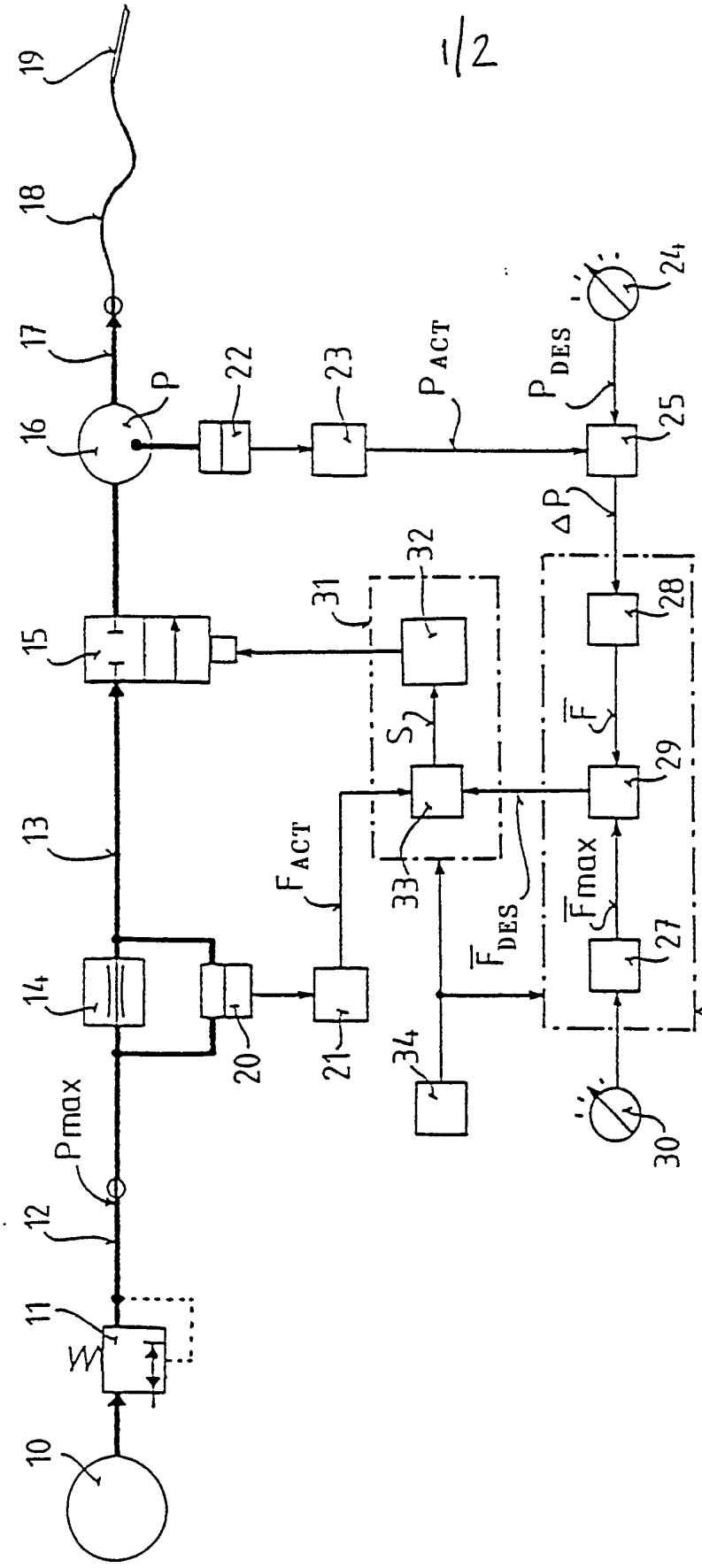
19
18
17
16
P
22
23
P ACT
P DES
24
25
ΔP
28
32
31
15
S
F
29
13
F ACT
33
F DES
F max
27
14
20
21
34
26
Pmax
12
11
10
30

Fig.1

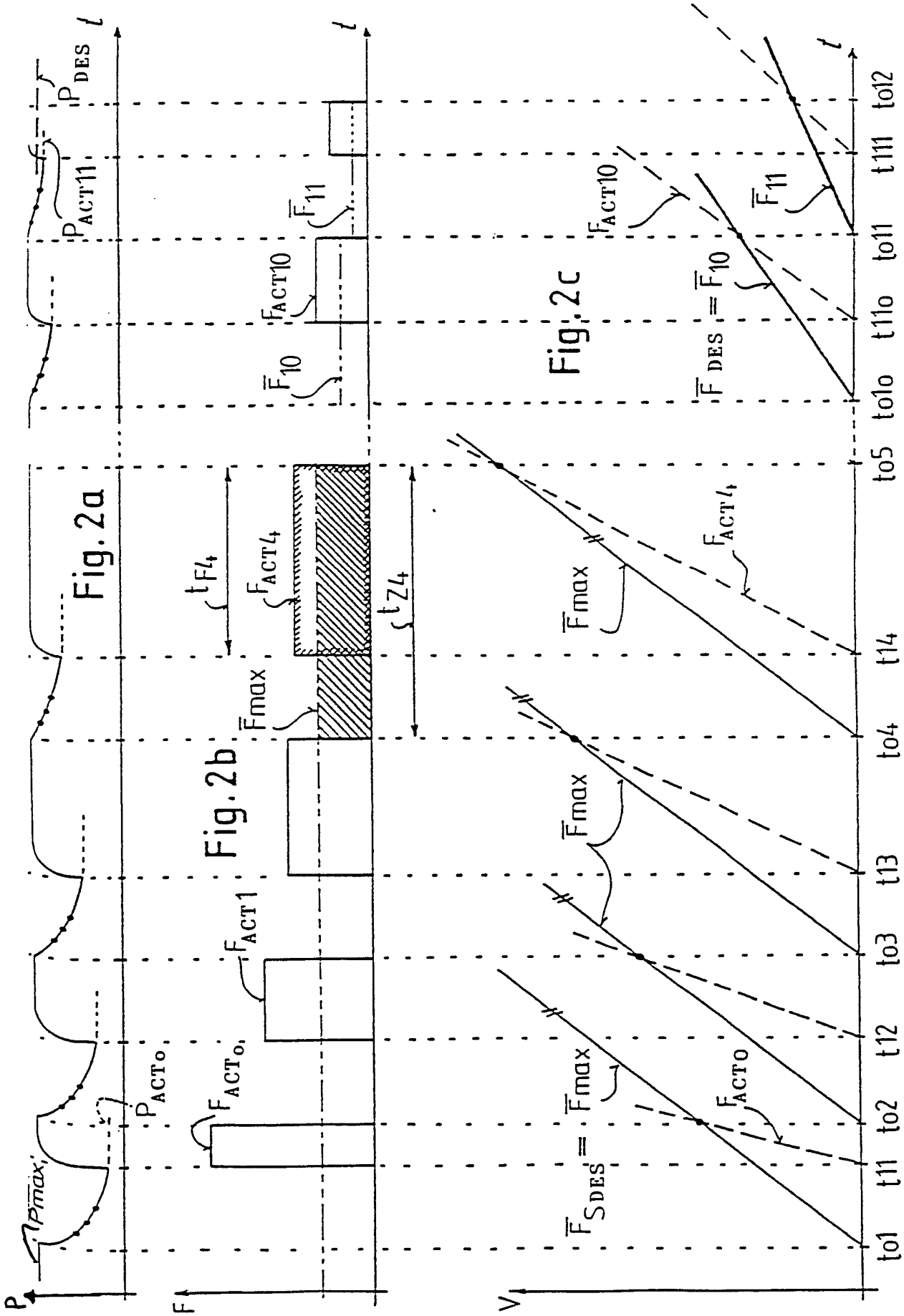
P
t
P_{pmax}
P_{ACT0}
P_{ACT11}
P_{DES}
Fig. 2a
F
F_{ACT0}
F_{ACT1}
$\overline{F}max$
t_{F4}
F_{ACT4}
t_{Z4}
$\overline{F}_{10}$
F_{ACT10}
$\overline{F}_{11}$
Fig. 2b
V
$\overline{F}_{SDES} = \overline{F}max$
F_{ACT0}
$\overline{F}max$
$\overline{F}max$
$\overline{F}max$
F_{ACT4}
F_{ACT10}
$\overline{F}_{DES} = \overline{F}_{10}$
$\overline{F}_{11}$
Fig. 2c
to1 t11 to2 t12 to3 t13 to4 t14 to5 to1o t11o to11 t111 to12

2271427

APPARATUS FOR INSUFFLATION

The invention relates to an apparatus in accordance with the preamble of Claim 1.

An apparatus of this type is known from DE 3,000,218 C2. The intermittent operation is decisive, with the result that the pressure in the body cavity can be determined simultaneously via the insufflation channel. The duration of the measuring phase and filling phase is prescribed under sequence control. In order to influence the filling operation, a plurality of restrictors are provided which can be alternatively switched into the conduit path and have different flow resistances. Consequently the flow, (volume per unit time) can be varied only coarsely because these restrictors represent only one element co-determining the flow among many others. Optimization for the purpose of filling the body cavity as quickly as possible while observing medically prescribed limiting parameters is impossible.

It is therefore the object of the invention to provide an apparatus of the generic type which permits an insufflation to be carried out automatically as quickly as possible while nevertheless accurately observing the prescribed limiting parameters.

This object is achieved by means of the characterizing features of Claim 1.

The control of the average flow, that is to say averaged over a complete cycle, compensates the interruption or reduction of the flow during the

measuring phases, which is required for measuring the pressure. The average flow automatically set therefore corresponds to an uninterrupted filling with this set flow, as a result of which a very fast filling operation is ensured. In this case, the observation of the prescribed flow is so precisely controlled that there is no risk to the patient in normal operation. Exercising control to achieve the desired average flow automatically compensates all the factors influencing the flow, such as, in particular, the falling pressure gradient between the body cavity and supply line.

The representation and processing of the signals according to the features of Claim 2 is clear and effective.

"Initial filling" which takes place with a manually prescribable maximum flow is carried out by means of the features of Claim 3, the maximum value being prescribed by the doctor from a medical point of view. As soon as the pressure in the body cavity reaches a range about the DESIRED pressure, there is an automatic switchover to "final filling", in which the filling phases become shorter until finally there is no longer any filling once the DESIRED pressure is reached.

In accordance with Claim 4, it is possible to use pressure sensors which according to the present technology detect finer pressure differences and thus permit a more exact flow calculation than is possible using direct flow-measuring instruments.

In accordance with the preferred configuration according to Claim 5, the valve which is present in

any case and necessarily has a restricting effect, is used simultaneously as measuring restrictor. This reduces the complexity and avoids an additional resistance acting to reduce the flow. Thus, a higher peak flow can be realized for a given inlet pressure.

The embodiment according to Claim 6 highlights a type of pressure determination as described in Patent Specification GB 2 246 442. In this case the characteristic curve of the pressure drop is identified during a measuring phase by three successive pressure measurements, and from this the body cavity pressure later produced in the static state is calculated in advance without having to wait for the static pressure equalization. As a result, the measuring phase can be substantially shortened by comparison with the principle known from DE 3,000,218 C2 mentioned at the beginning, in accordance with which the pressure equalization has to be awaited for the current pressure measurement. The accumulator required for this "dynamic pressure measurement" need maintain an (exponentially) falling flow only for as long as the three pressure measurements can be carried out. The more precise the pressure-measuring element available, and the better its measuring resolution, the more shortly the pressure measurements can succeed one another. Consequently, in the case of a self-compressible medium (gas) a length of tube or hose only 10cm long can serve as an adequate accumulator volume.

The invention is explained in more detail below with the aid of an exemplary embodiment illustrated in the drawing, in which

Fig 1 shows a block diagram of a device in accordance with the invention

Fig 2 shows timing diagrams to illustrate the functioning of the device.

In the following description, it is assumed for the sake of simplicity that the medium to be insufflated is gas (in particular CO_2). In accordance with Fig. 1, a gas cartridge 10 supplies a feed line 12 via a reducing valve 11 with gas which is available here with the set pressure Pmax = 50 mm Hg. Located in the following conduit path 13 is a restrictor 14 and an electromagnetically operable valve 15 which can open and close the conduit path to a following accumulator 16. The output of the accumulator 16 leads to a discharge line 17 to which an insufflation needle 19 is connected via a hose 18. The conduit path for the gas is - by contrast with electrical lines - emphasized by thick lines.

Thus, a differential pressure sensor 20 is in each case pressurized from both sides of the restrictor 14 by gas, which sensor delivers an electrical signal, corresponding to the pressure drop at the restrictor 14, to a computing module 21 which calculates therefrom, while taking account of the flow resistance of the restrictor 14, the flow through the restrictor, which it outputs as the F_{ACT} signal. The differential pressure sensor 20 and the computing module 21 form a flow-measuring device.

The pressure P in the accumulator 16 is converted by a pressure transducer 22 into an electric signal which is evaluated by a pressure-measuring device 23

in the manner described in more detail in Patent Specification GB 2 246 442 in order to generate therefrom an electric P_{ACT} signal which represents the pressure, extrapolated from the previous curve, in the abdominal cavity after the pressure equalization between the accumulator and the abdominal cavity.

The P_{ACT} signal is input together with a P_{DES} signal tapped by a manually settable desired height-value transmitter 24 into a subtractor 25 which forms a ΔP signal therefrom.

A generator device 26 consists of a first and second function generator 27, 28 and a selector module 29. The first function generator 27 generates an $\bar{F}max$ signal which rises linearly in value with time, and does so starting repeatedly with zero, as will be further explained with the aid of Fig. 2. In this case, the rise per unit time can be varied via a manually settable adjustor 30. The second function generator 28 generates an $\bar{F}$-signal, which likewise rises linearly in value with time, and does so starting repeatedly from zero, something which will likewise be explained in more detail with the aid of Fig. 2. In this case, the rise per unit time is variable as a function of the ΔP signal, specifically in such a way that when ΔP = zero, the $\bar{F}$ signal likewise remains zero (= no rise), and with an increasing value of ΔP an increasingly steeper rise is produced.

The selector module 29 now outputs the respectively smallest of these two signals $\bar{F}$ and $\bar{F}max$ as $\bar{F}_{DES}$ signal.

A valve controller 31 contains a switching amplifier 32 which drives the magnet coil of the valve 15, as well as a coincidence module 33 which is fed the F_{ACT} signal and $\bar{F}_{DES}$ signal. In the event of equality of these signals, the coincidence module 33 trips a control signal S which effects the start of a new cycle in a manner yet to be described.

Since various functions proceed as a function of time, a timing clock generator 34 is represented which acts both on the generator device 26 and on the valve controller 31.

When analogue signals are being processed, correspondingly high voltage values are involved, depending on the signal value. In the case of digitally coded signals, the value is hidden in the bit pattern. The signal values are represented in analogue form in the following diagram of Fig. 2 in order to enhance the clarity.

It goes without saying that in the case of digital signal processing most of the previously mentioned modules and devices run as "organization programs", in the sense that a unit of hardware executes various time-displaced operations under programmed control.

Fig 2a represents the variation in the pressure P in the accumulator 16 as a function of time over a plurality of cycles. The flow F, in particular F_{ACT} is illustrated in Fig. 2b. The gas volume V is shown as a function of time t in Fig. 2c.

When the valve 15 is open, the pressure P in the

accumulator 16 can reach at most the limiting value Pmax prescribed by the reducing valve 11. This state obtains at the moment when the timescale starts.

At the instant to1, a new cycle starts with the start of a measuring phase, with which the valve 15 closes. In consequence, the accumulator is emptied exponentially, the asymptote of the curve representing the pressure last set in the body cavity in the static state in the case of pressure equalization. However, it is not necessary to wait for this state. It suffices to identify the characteristic curve with the aid of three pressure measurements symbolized by points on the curve. A family of curves is stored in a model memory which belongs to the pressure-measuring device 23. Once one of the curves has been identified, the pressure-measuring device outputs the associated value of P_{ACTO}. It may be seen in Fig. 2 that P_{ACTO} is at first far removed from P_{DES}. The measuring phase lasts approximately 0.2-1 sec and ends at the instant t11.

At the instant t11, a filling phase begins with the opening of the valve 15. The pressure P in the accumulator 16 rises rapidly again to Pmax (Fig. 2a). Since the pressure gradient to the still very low pressure in the body cavity P_{ACTO} is large, a high flow F_{ACTO} (Fig. 2b) can form during the filling phase. The aim of the control during the "initial filling" now consists in setting up a uniform average flow Fmax over the duration of a cycle. When the duration of the measuring phase has been fixed and the magnitude of the flow F_{ACT} depends essentially on the pressure difference and the flow resistances, the control is exercised by automatically varying the duration of the filling phase. For this purpose, in accordance with

Fig. 2c the generation of the Fmax signal starting with zero is started at the instant t01. The F_{ACT0}, which rises as time progresses, is produced at the instant t11 with the opening of the valve 15. Since the flow is equal to the gas volume V per unit time T, the diagrams for $\bar{F}max$ and F_{ACT0} are represented in the V-t diagram as straight lines with the origin at t01 and t11, respectively, and with different gradients. The condition $F_{ACT0} = \bar{F}max$ is fulfilled at the point of interception of the two straight lines. This state is recorded by the coincidence module 33, which thereupon indicates the end of the filling phase and thus the end of the previous cycle.

This state corresponds simultaneously to the start of a new measuring phase of a new cycle at the instant t02.

After expiry of the measuring phase at the instant t12, a reduced flow F_{ACT1} is set since the pressure gradient to the body cavity has become smaller due to the previous filling. Consequently, the straight line of F_{ACT1} in the diagram of Fig. 2c is inclined slightly less steeply than previously. The point of intersection with the $\bar{F}max$ straight lines started at t02 therefore occurs later this time, so that the filling phase for equalizing the smaller flow F_{ACT1} lasts longer.

This sequence is repeated analogously in the following cycles, F_{ACT} becoming continuously smaller with the increasing degree of filling the body cavity and the filling phase thus becoming longer.

The averaging is illustrated once more using the

example of the 4th cycle. The magnitude of the area $F_{ACT4} \times t_{F4}$ is equal to the area of $\bar{F}max\ t_{Z4}$.

The operation is illustrated only in principle in the diagram of Fig. 2. In fact the absolute magnitudes and timing conditions are different. Thus, the measuring phase is usually shorter than the filling phase. However, if the real relationships are shown, it is not possible to reproduce a plurality of clearly differentiated cycles on the format of the drawing. This becomes clear when it is considered that one cycle can actually last up to a plurality of seconds in relation to a maximum of 1 sec of a measuring phase.

So far, the normal sequence during the "initial filling" has been described, in which the aim is to fill the body cavity as quickly as possible. The limiting criteria from the medical point of view are prescribed in this case as Pmax and $\bar{F}max$, which value has previously been relayed by the selector module 29 as reference variable $\bar{F}_{DES}$. Assuming that the doctor leaves the setting at the adjustor 30 unchanged, the rise in the straight line Fmax remains the same in each cycle.

As soon, however, as the pressure in the body cavity reaches the vicinity of the set desired value P_{DES}, a different operating module or " final filling" is carried out, in which the reference variable $\bar{F}_{DES}$ become smaller, the smaller the difference ΔP.

The criterion for this is the $\bar{F}$ signal in accordance with Fig. 1. As long as its signal value is greater than the Fmax signal, the latter is used as

reference variable F_{DES}. However as soon as the $\bar{F}$ signal, whose rise with time is a function of ΔP, is equal to and less than the $\bar{F}max$ signal, F takes over the control.

The straight line $\bar{F}_{10}$ in Fig. 2c has a distinctly smaller gradient than the straight line $\bar{F}max$. Consequently, the point of intersection of the straight lines $\bar{F}_{10}$ and F_{ACT10} is closer in time to the instant t110, although the gradient of the straight line F_{ACT10} is still flatter than in the previous cycles. As a result, the filling phase is now distinctly shortened, as a result of which, with the smaller F_{ACT10}, a correspondingly smaller average flow $\bar{F}_{10}$ is produced for this cycle.

In the following 11th cycle, P_{ACT11} is even closer to P_{DES}, with the consequence that the filling phase from t111 to t012 is even shorter. In this way, the equalization of P_{ACT} and P_{DES} is now produced very gently, without the risk of overshooting the target. As soon as $P_{ACT} : P_{DES}$ obtains, the rise in the $\bar{F}$ signal is zero, that is to say its value remains zero, so that one measuring phase is immediately followed by a new measuring phase. Here, it is expedient to activate a monitoring module which has the effect of interposing a pause interval of possibly 500 ms.

If a pressure loss occurs in the body cavity, this is recorded in the following measuring phase and, depending on the magnitude of the ΔP determined, this once again trips a filling phase of matching duration, with the automatic effect that the DESIRED pressure is maintained.

In the described embodiment, an apparatus for the insufflation of a medium into a body cavity has a valve (15) and a restrictor (14) in the conduit path (13). The valve (15) is used to block the conduit path (13) during a measuring phase at the start of a cycle, so that the pressure P_{ACT} in the body cavity can be determined on the apparatus side. During the following filling phase of a cycle, the flow, F_{ACT} is determined via the restrictor (14). A generator device generates a $\bar{F}_{DES}$ signal which represents the prescribed average flow during a cycle. A coincidence module (33) trips the end of the filling phase and the start of a new cycle in the event of the equality of F_{ACT} and $\bar{F}_{DES}$. As a result, the length of the filling phases varies in the manner of a pulse width control. Initially, $\bar{F}$ max is output as $\bar{F}_{DES}$ via a selector module (29), resulting in quick filling. At the end, an $\bar{F}$ which becomes smaller with smaller ΔP is output as $\bar{F}_{DES}$, so that the DESIRED pressure of the body cavity is reached gently.

In the example of Fig. 1, the restrictor 14 was represented as a separate element. However, the valve 15 also represents a restrictor, even if as low a flow resistance as possible is aimed at in its design. Given sufficiently sensitive pressure sensors as are currently already available, even this slight restricting effect can, however, be used to determine the flow. Thus, use is made not of a valve converted to function as a restrictor, but of a normal valve, and a further limitation of the maximum flow, which is already limited anyway by the insufflation needle, is thus eliminated.

The control illustrated above depends on the

principle used to determine the pressure in the body cavity - whether in the state of static pressure equalization in accordance with DE 3,000,218 C2 or of the dynamic interpolation in accordance with DE 4,019,239 A1.

The valve named above is a representative of elements by means of which the flow can be influenced in a comparable manner, such as by means of a controlled pressure regulator, for example.

PATENT CLAIMS:

1. Apparatus for the insufflation of a medium into a body cavity, having a restrictor and an electromagnetically operable valve in a conduit path situated between a feed line and a discharge line, having a valve controller which respectively closes the valve during a measuring phase that starts at the start of a cycle, and respectively opens the valve during the subsequent filling phase, which lasts till the end of the cycle, a timing clock generator respectively determining the duration of the measuring phase, as well as having a pressure-measuring device which generates an electric P_{ACT} signal which determines the pressure in the body cavity and is respectively determined during measuring phase, characterized in that there is provided in the conduit path (13) a flow-measuring device (20, 21) which generates an F_{ACT} signal representing the flow during a cycle, in that a generator device (26) is provided which generates an $\bar{F}_{DES}$ signal representing the average flow to be set during a cycle, and in that a coincidence module (33) is provided which in the event of the agreement of the F_{ACT} signal and F_{DES} signal respectively trips the end of a filling phase of a cycle, and thus the start of a measuring phase of the following cycle.

2. Apparatus according to Claim 1, characterized in that the flow-measuring device (20, 21) generates an F_{ACT} signal which represents, summed from the start of the filling phase of a cycle onwards, the volume of the medium flowing through the restrictor (14), and in that the generator device (26) generates an $\bar{F}_{DES}$ signal which represents, summed from the start of the measuring phase of a cycle onwards, the volume of the

medium that is to be set and flows through the conduit path (13), the rise in this volume per unit time being settable.

3. Apparatus according to Claim 2, characterized in that the generator device (26) has a first function generator (27) for generating an $\bar{F}max$ signal whose rise per unit time can be set via a manually operable adjustor (30), in that the generator device (26) has a second function generator (28) for generating an $\bar{F}$ signal whose rise per unit time is varied by a ΔP signal which is applied by a subtractor (25) in accordance with the difference between the P_{ACT} signal and a P_{DES} signal, the rise in the case of zero difference being zero and becoming steeper with increasing difference, and in that the generator device (26) has as a selector module (29) which outputs the respectively smallest signal value of the $\bar{F}$ signal or $\bar{F}max$ signal as $\bar{F}_{DES}$ signal.

4. Apparatus according to Claim 1, characterized in that the flow-measuring device has a computing module (21) which is fed an input signal representing the pressure drop across the restrictor, from which the computing module determines the respectively corresponding flow and outputs it in the form of the F_{ACT} signal.

5. Apparatus according to Claim 1, characterized in that the valve (15) is simultaneously used as restrictor.

6. Apparatus according to Claim 1, characterized in that between the valve (15) and discharge line (17) an accumulator (16) is arranged for the medium to be

insufflated, the pressure variation in the accumulator (16) being evaluated during the measuring phase for the purpose of in each case determining the pressure in the body cavity.

7. Apparatus according to one of Claims 2, 4 or 6, characterized in that the restrictor (14) is arranged between the feed line (12) and valve (15).

8. Apparatus for insufflation of a fluid into a body cavity and having an operating cycle comprising a measuring phase and a filling phase, said apparatus comprising inlet and discharge means, conduit means for communicating said fluid between said inlet and discharge means, valve means selectively switchable for preventing flow in said conduit means during said measuring phase and allowing fluid flow during said filling phase, means for generating a signal according to a required flow of the fluid during said operating cycle, means for generating another signal according to flow of the fluid during said operating cycle and controller means for comparing said signals and switching said valve means to prevent flow in said conduit means, whereby the filling phase of said operating cycle is terminated when said signals have a predetermined relationship.

9. Apparatus for insufflation of a fluid into a body cavity substantially as hereinbefore described with reference to the accompanying drawings.

Examiner's report to the Comptroller under Section 17 (The Search report)	GB 9320805.6
Relevant Technical Fields (i) UK Cl (Ed.L) G1N (NEND) (ii) Int Cl (Ed.5) A61B; A61M 13/00	Search Examiner R S CLARK Date of completion of Search 17 DECEMBER 1993
Databases (see below) (i) UK Patent Office collections of GB, EP, WO and US patent specifications. (ii) ONLINE DATABASE: WPI	Documents considered relevant following a search in respect of Claims :- ALL

Categories of documents

X: Document indicating lack of novelty or of inventive step.

Y: Document indicating lack of inventive step if combined with one or more other documents of the same category.

A: Document indicating technological background and/or state of the art.

P: Document published on or after the declared priority date but before the filing date of the present application.

E: Patent document published on or after, but with priority date earlier than, the filing date of the present application.

&: Member of the same patent family; corresponding document.

Category	Identity of document and relevant passages	Relevant to claim(s)
	NONE	

Databases: The UK Patent Office database comprises classified collections of GB, EP, WO and US patent specifications as outlined periodically in the Official Journal (Patents). The on-line databases considered for search are also listed periodically in the Official Journal (Patents).