Jan. 16, 1951 H. M. PFLAGER 2,538,380

RAILWAY TRUCK

Filed May 22, 1946

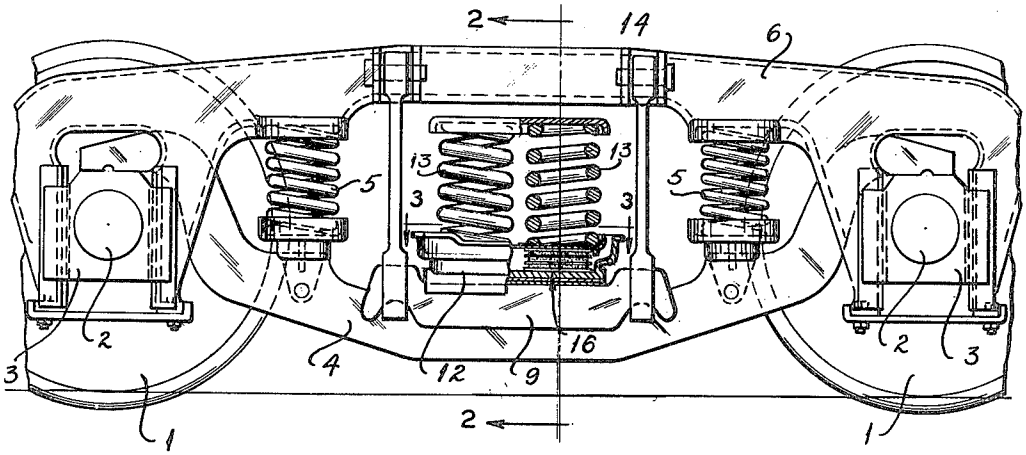

FIG. 1.

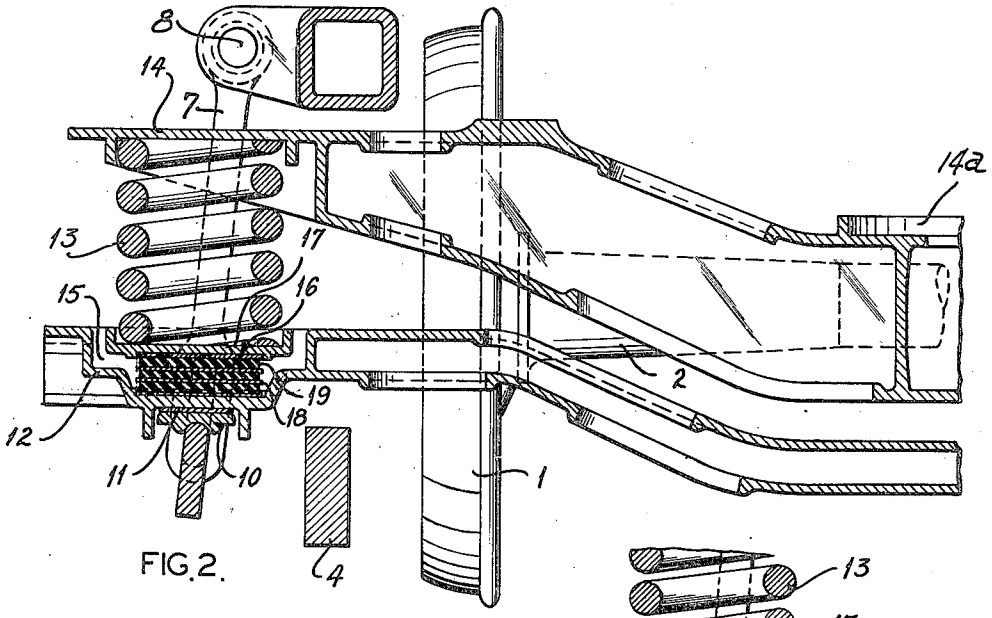

FIG. 2.

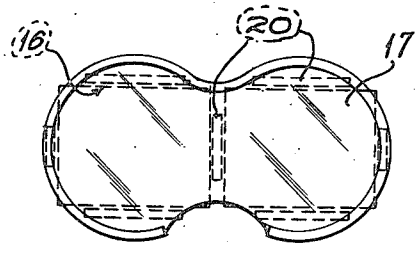

FIG. 3.

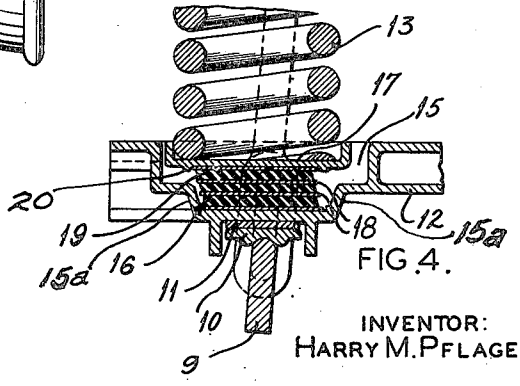

FIG. 4.

INVENTOR:
HARRY M. PFLAGER

BY Rodney Radd

ATTORNEY

Patented Jan. 16, 1951

2,538,380

UNITED STATES PATENT OFFICE

2,538,380

RAILWAY TRUCK

Harry M. Pflager, St. Louis, Mo., assignor to General Steel Castings Corporation, Granite City, Ill., a corporation of Delaware

Application May 22, 1946, Serial No. 671,559

5 Claims. (Cl. 105—190)

1

The invention relates to railway rolling stock, and more particularly to railway trucks of the type in which the load supporting bolster is carried by springs positioned near the opposite ends of the bolster, and the bolster, the bolster springs and the support for the bolster springs have movement laterally of the truck, relative to the truck frame, to accommodate track irregularities, alternate tangent and curved track, switches and other conditions tending to create side thrusts between the vehicle body and truck.

The ordinary truck is provided with swing hangers to take care of heavy lateral shocks but other minor shocks caused by hunting of the wheel on the rail or by minor low spots in the track are not sufficient to move the swing hangers, and such shocks are transmitted from the truck through the bolster to the car body.

It is the object of this invention to absorb these minor lateral vibrations by means of rubber pads, thereby preventing such minor shocks from being carried to the car body.

Another object of the invention is to have the rubber cushions placed in the spring plank under the bolster spring to absorb shocks and leave the underside of the spring plank unchanged from the usual structure which provides for applying shims between the spring plank and the swing hanger bottom cross bar, thus making it possible to shim up the spring plank to adjust the height due to a weakened spring without removing the rubber or spring from the spring plank.

A more specific object of the invention is to increase the lateral flexibility of a railway truck equipped with swing hangers by providing limited relative lateral movement between the bolster and spring plank by means of a yieldable pad positioned therebetween and which absorbs small shocks completely and damps shocks of larger magnitude.

These and other detail objects as will appear from the following description are attained by the structure illustrated in the accompanying drawings, in which:

Figure 1 is in part a side elevation and in part a longitudinal vertical section of a railway truck constructed according to the invention.

Figure 2 is a detailed transverse vertical section drawn to an enlarged scale taken approximately on the line 2—2 of Figure 1.

Figure 3 is a detail top view of the bolster spring support drawn to an enlarged scale and is approximately on the line 3—3 of Figure 1, and

Figure 4 is a view similar to Figure 2 showing

2

distortion of the yieldable pad when forces tend to shift the truck laterally of the bolster.

The truck includes wheels 1, axles 2, journal boxes 3 which support equalizers 4 in which are mounted truck springs 5 which carry a truck frame 6. The truck is of the lateral motion bolster type and has pairs of swing hangers 7 at opposite sides of the truck pivotally suspended from frame 6 by pins 8. Each pair of hangers 7 carry a cross-bar 9 on which is mounted a bearing 10 carrying a spacer 11 which supports the adjacent end of a spring plank 12. Near the ends of spring plank 12 are mounted coil springs 13 which support a bolster 14 having a center plate 14a on which is mounted the vehicle body (not shown).

Each end of spring plank 12 has recesses 15, the sides of which are inclined upwardly and outwardly. Yieldable pads 16 are mounted in recesses 15 and the lower ends of the pads fit snugly in the lower portions of the recesses. A spring seat 17 is mounted on the pads at the end of the spring plank and has lugs 20 positioning the associated pads relative to the spring seat. In providing pad 16 between spring plank 12 and bolster spring seat 17, the pad is not subject to any distortion laterally because of the inclination of swing hangers 7 from the vertical. By positioning pads 16 and spring seat 17 in recess 15, as shown, springs 13 may be removed, without removing pads 16, by jacking bolster 14 a distance only slightly exceeding the free height of the springs.

Each yieldable pad 16 comprises alternate layers of steel 18 and rubber 19 bonded together and adapted to distort as shown in Figure 4 when forces are exerted thereon in opposite directions laterally of the truck. The sides 15a of recesses 15 are inclined sufficiently to permit such distortion of pads 16. Lateral distortion of pads 16 under shearing forces is limited by spring seats 17 engaging spring plank 12 at the boundaries of recesses 15. The resistance of pads 16 to a limited amount of distortion under shear preferably is less than the force required to overcome the static friction between hangers 7 and their pins 8 and between cross-bars 9 and bearings 10 as is necessary to cause pivotal movement of swing hangers 7. Hence, pads 16 absorb completely transverse shocks of insufficient force to move hangers 7 on their pivots. In addition, they damp shocks of larger magnitude, sufficient to cause lateral swinging action of the swing hangers and further movement of truck frame 6 relative to bolster 14, thereby tending to pre-

vent or reduce swaying and lurching of the car body. The swinging action of the swing hangers also tends to produce increasing resistance to the movement of truck frame 6 relative to bolster 14.

Pads 16 improve the riding qualities of the car by absorbing completely lesser lateral shocks insufficient to produce movement of swing hangers 7, without transmitting such shocks to the car body, and by cushioning lateral shocks of greater magnitude. Such lesser shocks are generally encountered when riding at high speed on tracks having small irregularities.

Details of construction may be varied substantially without departing from the spirit of the invention and the exclusive use of novel structure as described as coming within the scope of the claims is contemplated.

What is claimed is:

1. In a railway truck including a spring plank, a bolster and a bolster supporting spring, said spring plank having a recess formed therein, distortive means supporting said spring from said spring plank and positioned in said recess, said means being yieldable laterally of the truck to provide transverse movement of the spring plank relative to the bolster, said means fitting snugly in the lower portion of said recess and the sides of said recess being inclined upwardly and outwardly to accommodate lateral yielding of the upper portion of said means.

2. In a railway truck including a truck frame, swing hangers pivotally suspended therefrom, a spring plank supported from said hangers, a bolster and a bolster supporting spring, said spring plank having an upwardly opening recess formed therein, a spring seat to receive and support said spring and positioned in said recess, means supporting said spring seat from said spring plank the lower portion of said means being snugly received in the bottom of said recess and its upper portion being substantially smaller in diameter than the upper portion of said recess and positioned in said recess also, said means being yieldable laterally of the truck to provide limited transverse movement of the spring plank relative to the bolster to absorb transverse shocks of insufficient force to move said hangers on their pivots, lateral yieldability of said means being limited by said spring seat engaging said spring plank at the boundaries of the upper portion of said recess when shocks of greater magnitude cause said hangers to pivot.

3. In a railway truck, a bolster, a bolster supporting spring, a mounting for said spring including a cushion of rubber-like material of sufficient height to provide for substantial relative displacement of its upper and lower faces when the same are subjected to thrusts in opposite directions transversely of the spring vertical axis, a spring seat on said cushion having a downwardly facing recess snugly fitting around the upper end of said cushion, a truck part having an upwardly facing recess opposing said downwardly facing recess, the sides of the lower part of the upwardly facing recess fitting snugly around the sides of the lower end of said cushion, the sides of the upper part of the upwardly facing recess being offset from the sides of the lower part of the recess and spaced from the sides of said cushion so that the major portion of said cushion normally is spaced from the sides of said recesses and the cushion is free to distort laterally to a limited extent only to accommodate predetermined restricted relative lateral movements of said spring seat and said truck part.

4. In a railway truck including a spring plank, a bolster and a bolster supporting spring, a spring seat closely surrounding the lower end of said spring, there being an upwardly opening and upwardly flaring recess in said spring plank receiving said spring seat, means in said recess with at least a part spaced from the sides thereof and supporting said spring seat in said recess and yielding laterally of the truck to provide limited transverse movement of the spring seat, spring and bolster relative to the spring plank to absorb small transverse shocks, the upper portions of the sides of said recess opposing said spring seat to limit lateral movement of said spring seat relative to said spring plank.

5. In a railway truck including a spring plank, a bolster and a bolster supporting spring, means supporting said spring from said spring plank and comprising horizontal layers of rubber-like material with intermediate plates bonded thereto and arranged to move relative to each other in parallel planes under thrusts applied transversely of the truck and placing the layers under shear, the lower portion of said supporting means being held against movement laterally of the truck relative to the spring plank, there being sufficient clearance at the sides of said means and about the lower end of the spring to accommodate lateral shifting of at least some of said intermediate plates, and corresponding lateral shifting of the bolster, relative to the spring plank.

H. M. PFLAGER.

REFERENCES CITED

The following references are of record in the file of this patent:

UNITED STATES PATENTS

Number	Name	Date
914,889	Spencer	Mar. 9, 1909
1,762,886	O'Brien	June 10, 1930
1,886,533	Davis	Nov. 8, 1932
1,911,330	Symington	May 30, 1933
1,916,149	Hedgcock	June 27, 1933
1,924,237	Glascodine	Aug. 30, 1933
2,163,253	Anderson	June 20, 1939
2,241,418	Nystrom et al.	May 13, 1941
2,242,212	Hankins	May 20, 1941
2,317,398	Nystrom et al.	Apr. 27, 1943