No. 729,843. PATENTED JUNE 2, 1903.

W. C. CARR.

ADVERTISING DEVICE.

APPLICATION FILED MAR. 30, 1903.

NO MODEL. 2 SHEETS—SHEET 1.

Fig 2

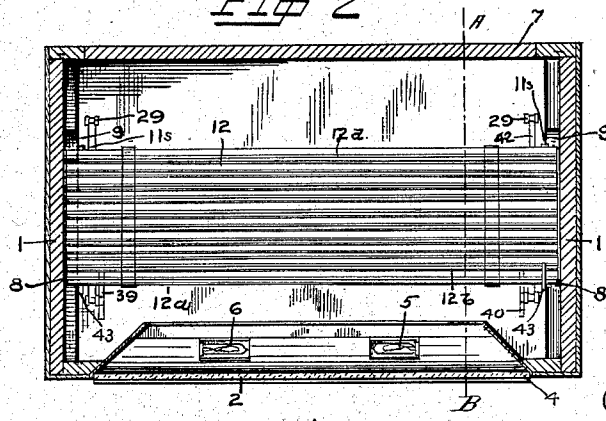

Fig 11

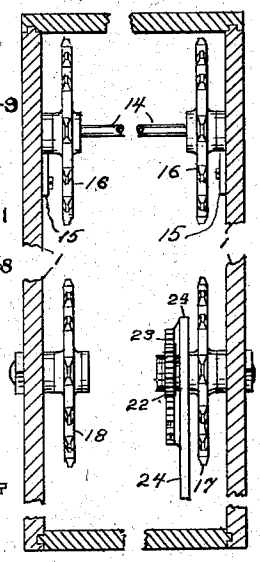

Fig 1

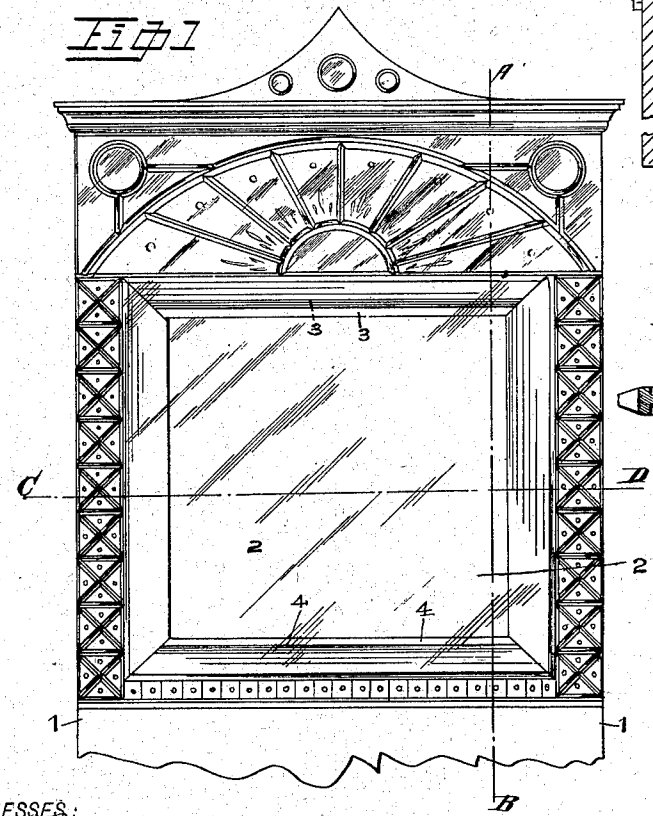

Fig 9

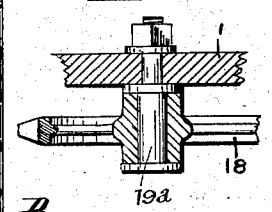

WITNESSES:
Harry A. Pearce
Wm. O. Morck

INVENTOR
William C. Carr.
BY
Thompson & Peel.
ATTORNEY

THE NORRIS PETERS CO., PHOTO-LITHO., WASHINGTON, D. C.

No. 729,843. PATENTED JUNE 2, 1903.

W. C. CARR.

ADVERTISING DEVICE.

APPLICATION FILED MAR. 30, 1903.

NO MODEL. 2 SHEETS—SHEET 2.

Fig 10

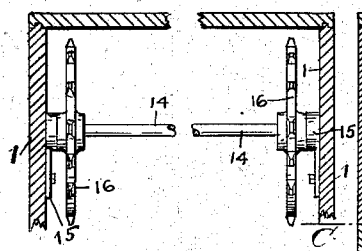

Fig 3.

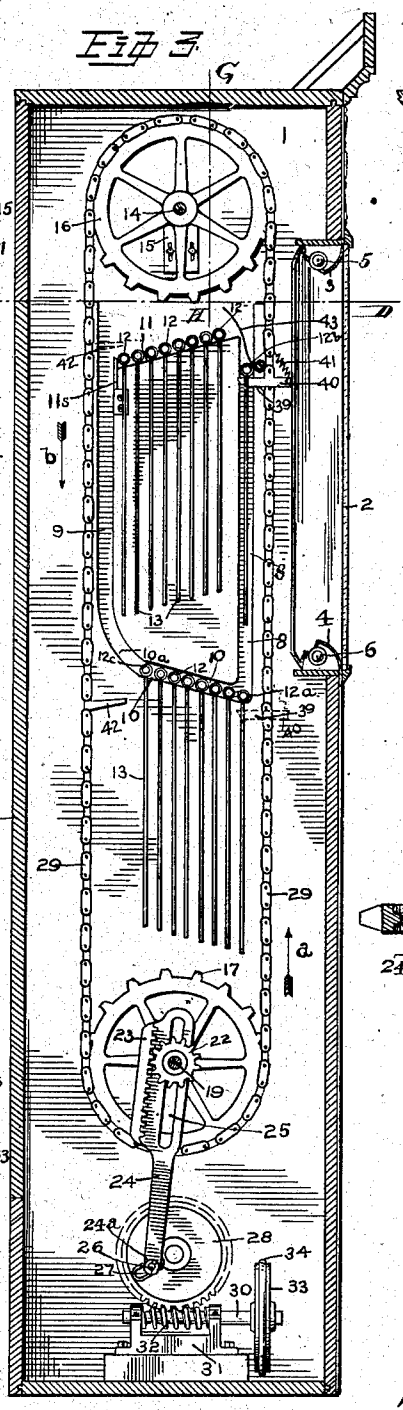

Fig 8

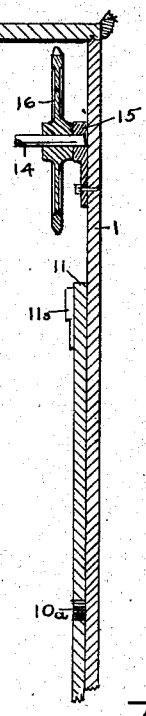

Fig 7

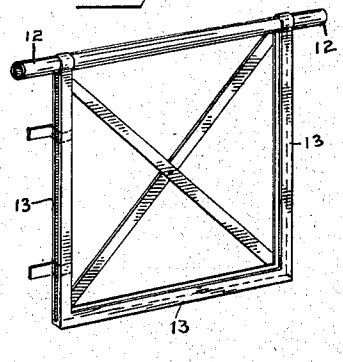

Fig 5

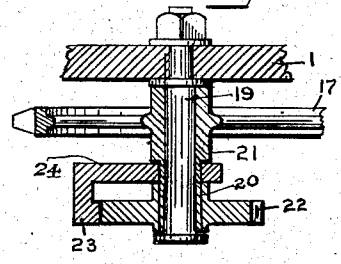

Fig 4

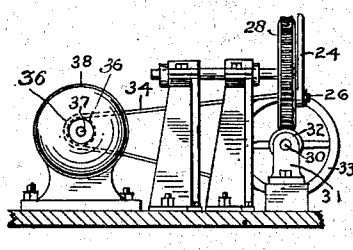

Fig 6

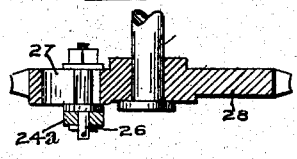

WITNESSES:

Harry S. Pearce

Wm. C. Monk

INVENTOR

William C. Carr.

BY

Thompson & Bee

ATTORNEY

THE NORRIS PETERS CO., PHOTO-LITHO., WASHINGTON, D. C.

No. 729,843. Patented June 2, 1903.

UNITED STATES PATENT OFFICE.

WILLIAM C. CARR, OF INDIANAPOLIS, INDIANA.

ADVERTISING DEVICE.

SPECIFICATION forming part of Letters Patent No. 729,843, dated June 2, 1903.

Application filed March 30, 1903. Serial No. 150,201. (No model.)

To all whom it may concern:

Be it known that I, WILLIAM C. CARR, a citizen of the United States, residing at Indianapolis, in the county of Marion and State of Indiana, have invented new and useful Improvements in Advertising Devices, of which the following is a specification.

My invention relates to an improved apparatus for exhibiting display advertising-cards—such as portraits, engravings, printed matter, or such like; and the same consists in means whereby each of the said cards is moved into position to be exhibited in succession.

The object of this invention is to construct an advertising-cabinet in which the mechanism for operating or transferring the advertising-cards will be reduced to a minimum number of parts and arranged in compact form, thereby permitting a reduction in the dimensions of the cabinet inclosing said mechanism; also, to provide simple mechanism that will operate to positively and automatically transfer or change the advertising-cards in their order of succession. I attain these objects by means of the mechanism illustrated in the accompanying drawings, in which similar numerals of reference designate like parts throughout the several views.

Figure 1 is a front view of the top broken-off portion of the cabinet, showing the displaying front or window. Fig. 2 is a sectional plan view of the same, taken through the line C D. (See Figs. 2 and 3.) Fig. 3 is a sectional elevational view of the cabinet, taken through the line A B. (See Figs. 1 and 2.) Fig. 4 is a detail view of the drive mechanism. Fig. 5 is an enlarged sectional detail view of the drive-rack and pinion. Fig. 6 is an enlarged detail sectional view of the rack, crank-pin, and worm-gear. Fig. 7 is a detail perspective view of the advertising-card-carrying frame. Fig. 8 is a broken-off detail sectional view of the end of the cabinet, showing the groove or guideway thereof. Fig. 9 is a detail sectional view of the driven or idler bottom sprocket-wheel; and Fig. 10 is a broken-off sectional view of the top portion of the cabinet, taken through the line G H, Fig. 3. Fig. 11 is a vertical sectional view of the casing, showing the upper and lower sprocket-wheels.

The cabinet 1, in which the mechanism is inclosed, is provided with a display opening or window, in which opening or window is mounted a glass 4, and situated at the top and bottom portions of said window, adjacent to the edges thereof, are suitable reflectors 3 and 4, back of which are situated the incandescent lamps 5 and 6, the light from which is reflected against the faces of the advertising-cards as they are exposed to view in front of the window 2. A suitable rear door 7 is provided for the purpose of gaining easy access to the mechanism and for removing and replacing advertising-card frames when such is necessary. Vertically-extending forward grooves or guideways 8 and similar vertically-extending rear grooves 9, all of which have their top ends open and their bottom ends connected by the forwardly and horizontally inclined grooves or guideways 10, are formed in the opposite sides or ends of said cabinet 1 and are situated to be directly opposite each other. Rearwardly and horizontally inclined guides or gravity-runners 11 extend from the top open portions of the forward grooves or guideways 8 to the top open portions of the rear grooves or guideways 9, and retaining stop-pins 11^s are secured to the rear ends of said runners 11 and are provided for the purpose of retaining the supporting-bars 12 of the card-holding frames 13 in position on said runners 11 and for preventing said bars 12 from sliding into and piling in the rear vertically-extending grooves or guideways 9. The bottom portions of the grooves or guideways 9 are curved forwardly and downwardly toward the bottom horizontally-inclined grooves or guideways 10 for the purpose hereinafter set forth.

A shaft 14 is situated within the top portion of the cabinet 1 and is mounted in its end bearings 15 to turn therein, and on said shaft is secured the sprocket-wheels 16 to turn therewith. Directly and vertically under said top sprocket-wheels 16 are the sprocket-wheels 17 and 18, which are mounted on their fixed studs 19 and 19^a, whereon they are adapted to freely turn. On the reduced portion 20 of the hub 21 of the sprocket-wheel 17 is firmly secured to turn therewith the pinion 22, which is adapted to mesh with the

reciprocating rack 23, by which latter said pinion 22 and its sprocket-wheel 17 are rotated in alternate opposite directions. The rack 23 is either firmly secured or formed integral on the pitman 24, and said pitman 24 is provided with the longitudinally-extending slot 25, formed in its top portion, and said slot is in parallel relation with said rack and is adapted to freely fit on the hub 21 of said sprocket-wheel 17. The bottom end 24^a of the pitman 24 is connected to the crank-pin 26, which latter is adjustably secured in the slot 27, formed radially in the side of the worm-wheel 28, so that said rack 23 may be adjusted to have a greater or lesser travel, according as it is necessary to either increase or diminish the travel of the endless chains 29. A shaft 30 is journaled in a suitable bearing-standard 31, and on said shaft is the worm 32, which meshes with the worm-wheel 28 to rotate the latter continuously and in the same direction. A pulley 33 is secured on one end of said shaft 30, and a band 34 extends from said driven pulley 33 to the drive-pulley 36, which latter is secured on the shaft 37 of any suitable motor 38. The endless chains 29 surround the sprocket-wheels 16 and 17 and 18, and on the forward or front portion of said chain 29 are yieldingly secured the lifting-dogs 39. Each of the dogs 39 is provided with the arms 40, to the free ends of which are connected the yielding springs 41, which latter permit said dogs 39 to swing upwardly to pass the bars 12 when said dogs 39 are moving in a downward direction, which movement immediately follows after a bar 12 has been placed in position on the runners 11. Lowering-dogs 42 are connected to adjacent links in position on the rear vertically-extending portion of said chain 29 and are provided for the purpose of removing said frame-carrying-bars 12 from their upper supporting-runners 11 over the stop-pin 11^s and lowering said bars 12 into the lower grooves or guideways 10, in which grooves, owing to their forwardly and horizontally inclined positions, said bars move forwardly into position to be successively removed therefrom and again elevated into position to be exposed to view or exhibited. Stripping-springs 43 are situated at or near the top open ends of the grooves or guideways 8, and said springs are secured to the ends of said cabinet 1, one at each end, in such position relatively to said grooves to be inclined upwardly and rearwardly from the front top portion of said grooves to positively strip or remove the bars 12 successively from their lifting-dogs 39 and place said bars on their supporting-runners 11.

The practice of my invention I will now proceed to describe. A series of eight of said frame-carrying bars 12 are mounted on the upper runners or supporting-ways 11, and a like series of eight are placed in the lower grooves or guideways 10. The runners 11 being horizontally inclined in a rearward direction cause the bars 12 to move by gravity or slide on the said runners against the rear stop-pins 11^s and in contact with each other, and similarly the lower grooves or guideways 10 being horizontally inclined forwardly said frame-carrying bars 12 tend to move and do move forwardly into said front grooves or guideways 8 and remain in close contact with each other. The top runners 11 and the bottom grooves or guideways 10 being charged with the requisite number of card-frames 13, in which suitable advertising-cards have been placed, the motor 38 is started to operate the mechanism, whereby the chain 29 is caused to move alternately in opposite directions. Suppose the dogs 39 in the position shown in dotted lines in Fig. 3 and the forward portion of the chain 29 moving in the direction of the arrow *a*. Then the dog 39 will engage the bar 12^a and elevate the same in the vertically-extending guideways or grooves 8 into the position of the dog 39 shown in full lines, at which position of said dogs 39 the bar 12^a has been elevated to the position indicated by the bar designated 12^b, at which position of said bar the latter contacts with the stripping-spring 43 to be gradually removed from said dogs 39 and deposited on the top-supporting-runners 11. Simultaneous with this movement the rear portion of the chain 29 moves downwardly, as indicated by the arrow *b*, to lower the bar, as 12^c, down in the rear vertically-extending grooves or guideways 9, and when said bar 12^a in its downward movement in said ways reaches the bottom downwardly and forwardly curved bottom portions 10^a of said rear vertical ways 9 said bar 12^c will slide downwardly and forwardly into said bottom grooves or guideways 10 out of the path of said lowering-dogs 42, thus permitting the latter to pass upwardly without contacting with the rearmost bar situated in said lower groove 10. The rear bar 12^d, situated on the runners 11 and contacting with the stop-pins 11^s, is removed from said runners by the dogs 42 and will be now described. The dogs 42 in their upward movement will engage the bottom side of the bar 12^d and elevate the same upwardly a slight distance above said stop-pins 11^s, and said dogs being horizontally and backwardly inclined toward said chain said bar 12^d will slide on the said inclined top edges of said dogs 42 till it contacts with the said carrying-chain 29 and the latter moves downwardly to lower said bar, as previously described.

Having thus fully described this my invention, what I claim as new and useful, and desire to cover by Letters Patent of the United States therefor, is—

1. In an advertising apparatus, the combination with opposing forward and rearward vertically-extending guideways open at their top ends and connected at their bottom ends by forwardly-extending inclined guideways, supporting-runners situated intermediate

said vertical guideways and adjacent the top open ends thereof, card-supporting bars adapted to be supported at their ends in said lower guideways and on said top runners, and retaining-stops on said runners, of conveying-chains confronting said vertically-extending guideways, lifting and lowering dogs mounted on said conveyer-chains and means whereby said conveyer-chains are operated to traverse alternately in opposite directions.

2. In an advertising apparatus, the combination with opposing forward and rearward vertically-extending guideways open at their top ends and connected at their bottom ends by forwardly-extending inclined guideways, supporting-runners intermediate said vertical guideways and adjacent the top open ends thereof, card-supporting bars adapted to be supported at their ends in said lower guideways and on said runners and stops situated at the lower ends of said runners, of endless conveying-chains having their vertically-extending portions confronting said vertical guideways, bar lifting and lowering dogs mounted on said vertically-extending portions of said chains, means for removing the bars from said elevating-dogs and means whereby said chains are traversed alternately in opposite directions.

3. In an advertising apparatus, the combination with opposing forward and rearward vertically-extending guideways open at their top ends and connected at their bottom ends by forwardly-extending inclined guideways, rearwardly-extending inclined runners situated intermediate said vertically-extending guideways and adjacent the top open ends thereof, card-supporting bars adapted to be supported at their ends in said lower guideways and on said runners and stops situated at the lower ends of said runners, of endless conveyer-chains having their depending portions confronting said vertically-extending guideways, elevating-dogs yieldingly mounted on the forward depending portions of said chains, lowering-dogs mounted on the rear depending portions of said chains, vertically-extending and rearwardly-inclined strippings situated at the top open ends of said forward vertically-extending guideways, and means for traversing said chains alternately in opposite directions.

4. In an advertising apparatus, the combination with opposing forward and rearward vertically-extending guideways open at their top ends and connected at their bottom ends by forwardly-extending inclined guideways, rearwardly-extending inclined runners situated intermediate said vertically-extending guideways and adjacent the top open ends thereof, card-supporting bars adapted to be supported at their ends in said lower guideways and on said runners, and bar-retaining stops situated at the lower ends of said runners, of a shaft situated above said supporting-runners, sprocket-wheels on said shaft, sprocket-wheels situated directly beneath said upper sprockets, endless chains connecting said upper and lower sprockets and confronting said forward and rearward vertically-extending guideways, bar-elevating lifting-dogs yieldingly mounted on the forward depending portions of said chains, lowering-dogs mounted on the rear depending portions of said chain and suitable means for traversing said chains alternately in opposite directions.

5. In an advertising apparatus, the combination with opposing forward and rearward vertically-extending guideways open at their top ends and connected at their bottom ends by forwardly-extending inclined guideways, rearwardly-extending inclined runners situated intermediate said vertically-extending guideways and adjacent the top ends thereof, card-supporting bars adapted to be supported at their ends in said lower guideways and on said runners and bar-retaining stops situated at the lower ends of said runners, of a shaft situated above said supporting-runners, sprocket-wheels on said shaft, sprocket-wheels situated directly beneath said upper sprockets, endless chains connecting said upper and lower sprockets and having their depending portions confronting said forward and said rearward vertically-extending guideways, bar-elevating lifting-dogs yieldingly mounted on the forward depending portions of said chains, lowering-dogs mounted on the rear depending portions of said chains, a rack-pinion on one of said lower sprocket-wheels, a rack, a pitman, a revoluble crank-wheel, and means for driving the latter.

6. In an advertising device, the combination with opposing continuous guideways, having vertically-extending portions, connected at their top and bottom ends by interposing upper and lower gravity-inclined ways, card-supporting bars resting on said upper and lower gravity-inclined ways, retaining-stops situated at the lower ends of said upper gravity-ways, of endless elevator-chains having forward elevating and rear lowering portions, lifting-dogs yieldingly mounted on said forward elevating portions of said chain and lowering-dogs mounted on the rear lowering portions of said chain and means for traversing said chain alternately in opposite directions.

7. In an advertising device, the combination with opposing continuous guideways having vertically-extending portions and connected at their top and bottom ends by interposing upper and lower gravity-inclined ways, retaining-stops situated at the lower ends of said upper gravity-ways, of endless elevating-chains, lowering and lifting dogs on said chains, a shaft situated above said bar-guiding ways, sprocket-wheels on said shaft, lower sprocket-wheels situated directly beneath said upper sprocket-wheels, a rack-pinion on one of said lower sprocket-wheels, a revoluble crank-wheel, a pitman adjustably connected

to said crank-wheel said pitman provided with a guiding-slot extending longitudinally of said pitman, a rack on said pitman and situated in parallel relation to said slot to mesh with said pinion at all positions of said pitman, and suitable means for rotating said crank-wheel.

In testimony whereof I have hereunto set my hand in the presence of two subscribing witnesses.

WILLIAM C. CARR.

Witnesses:
THOMPSON R. BELL,
SYLVESTER A. MORGAN.