US 20130036698A1

(19) United States

(12) Patent Application Publication

(10) Pub. No.: US 2013/0036698 A1

(43) Pub. Date: Feb. 14, 2013

Gladue

(54) FASTENER

(76) Inventor: **Dean Edward Gladue**, Wabasca (CA)

(21) Appl. No.: **13/137,377**

(22) Filed: **Aug. 10, 2011**

Publication Classification

(51) **Int. Cl.**
E04B 2/30 (2006.01)

(52) **U.S. Cl.** **52/483.1**

(57) **ABSTRACT**

An apparatus for securing a wall cladding panel against a wall structure member comprising a plate fastenable to the wall structure member and at least one elongate blade extending from the plate for embedding within the wall cladding panel. The apparatus may further comprise at least one flexible flap extending from the elongate blade for retaining the blade within the wall panel. The elongate blades spaced apart from each lengthwise and in a direction transverse to their lengths. The plate may further include at least one bore for passing a fastener therethrough for securing the plate to the wall structure member. The plate may include at least one spike extending from a rear surface of the plate for embedding within the wall structure member.

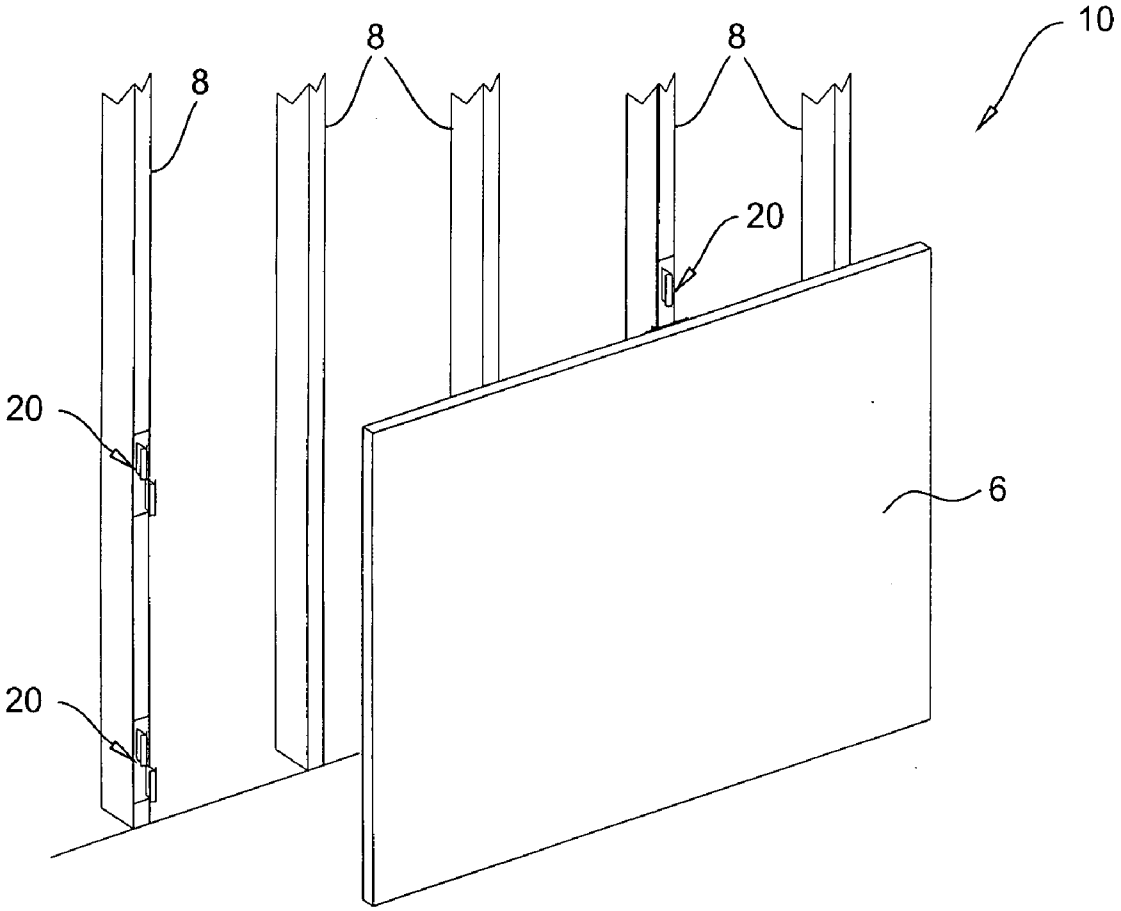

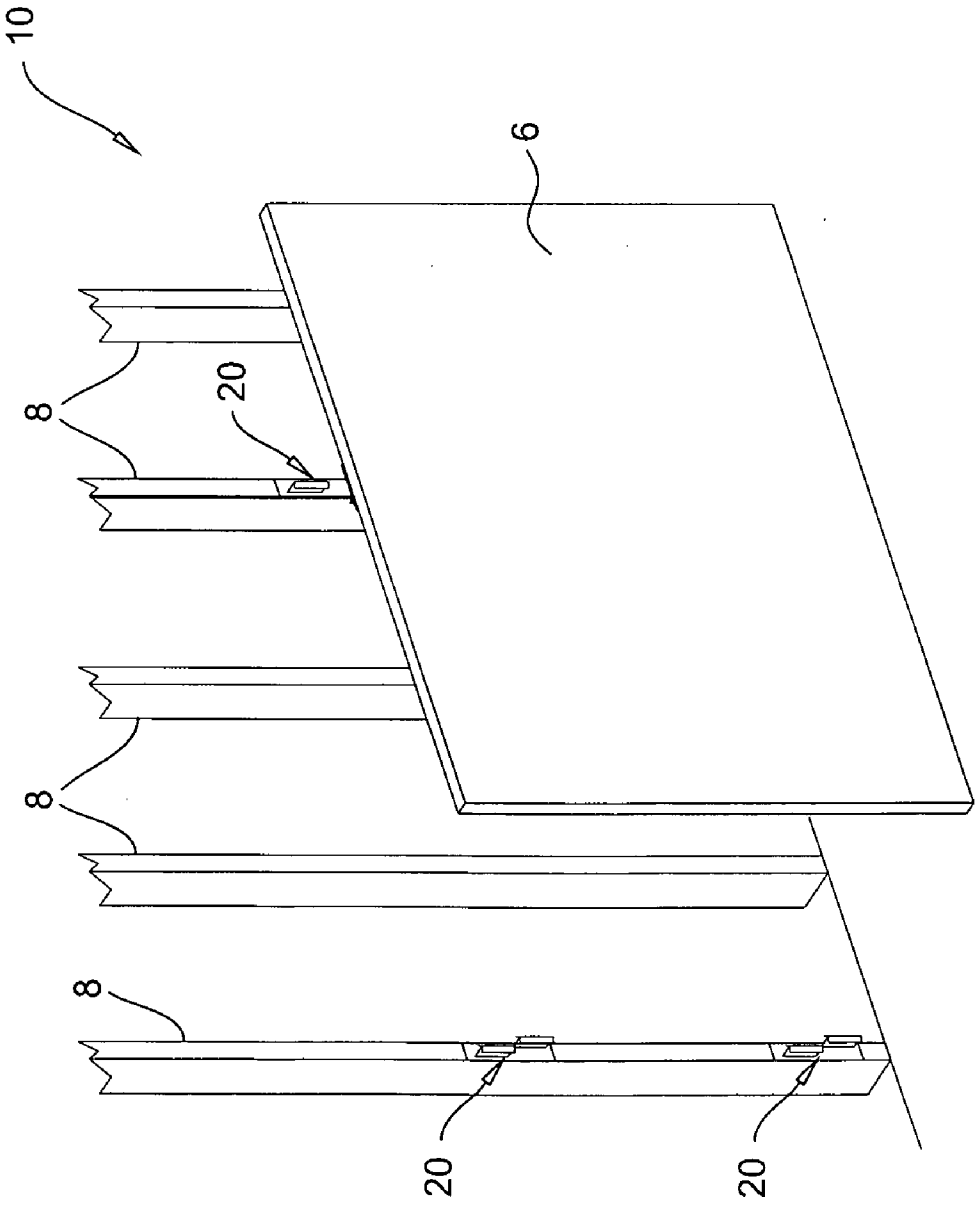

Fig.1

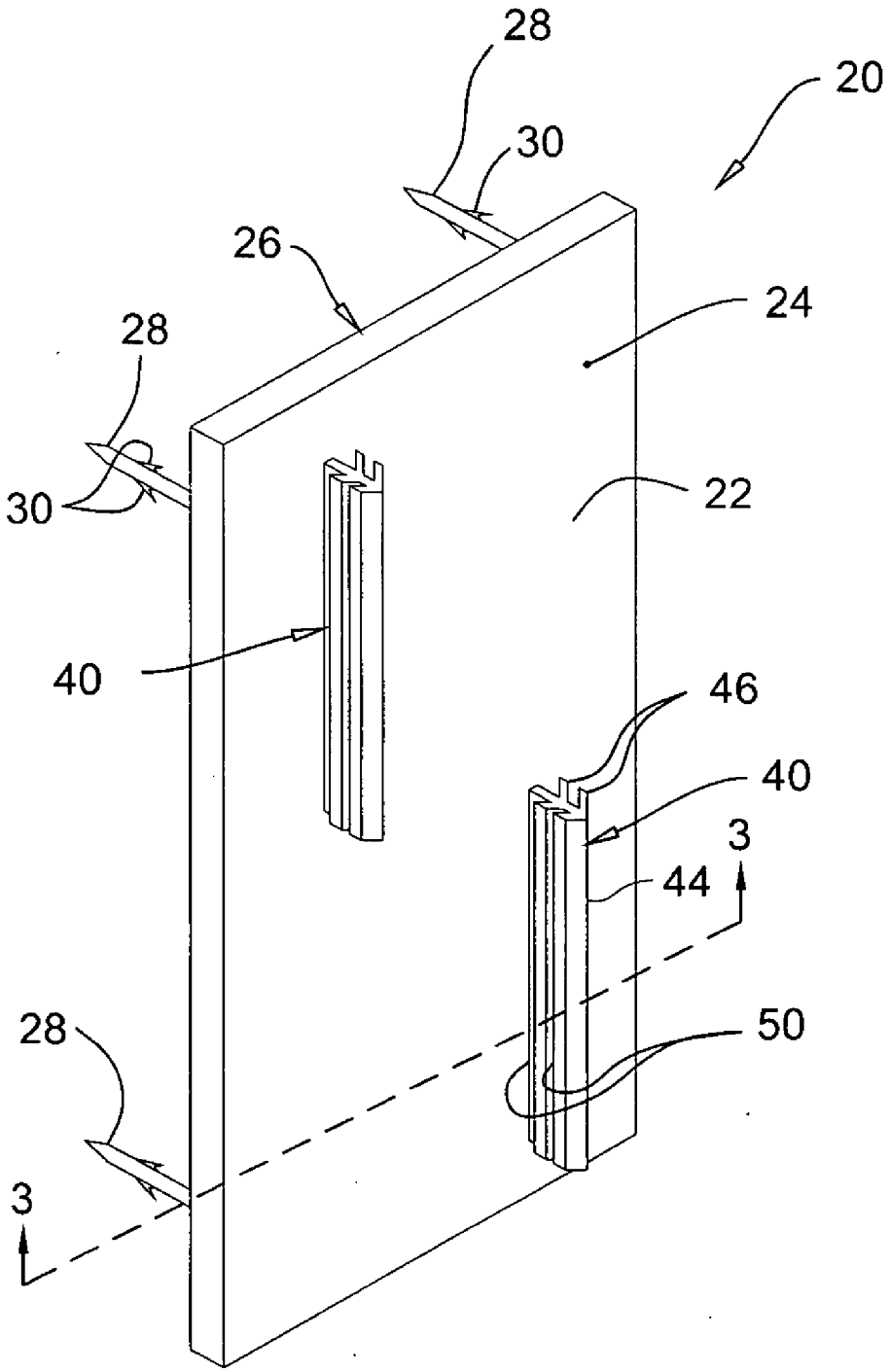

Fig.2

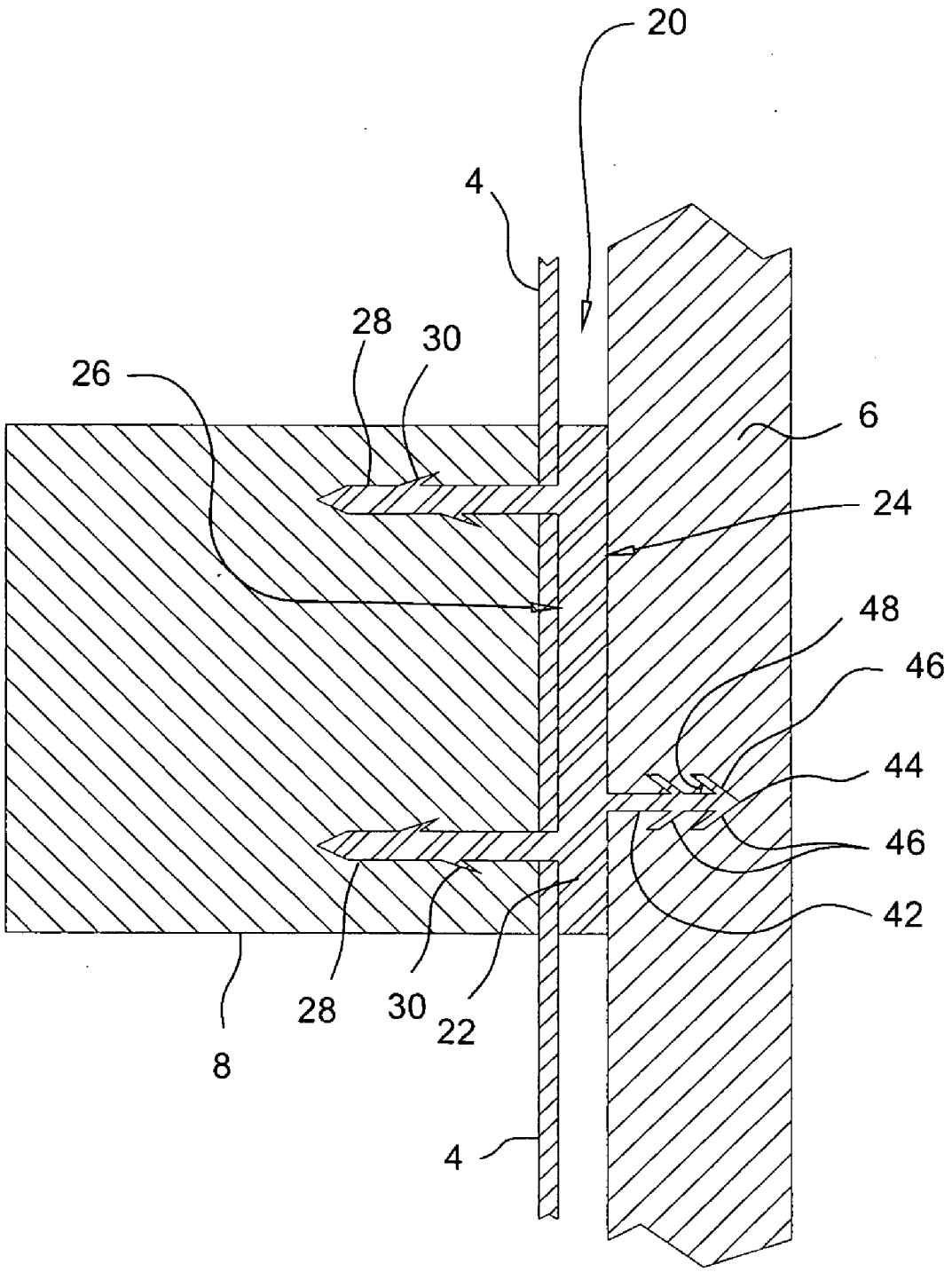

Fig.3

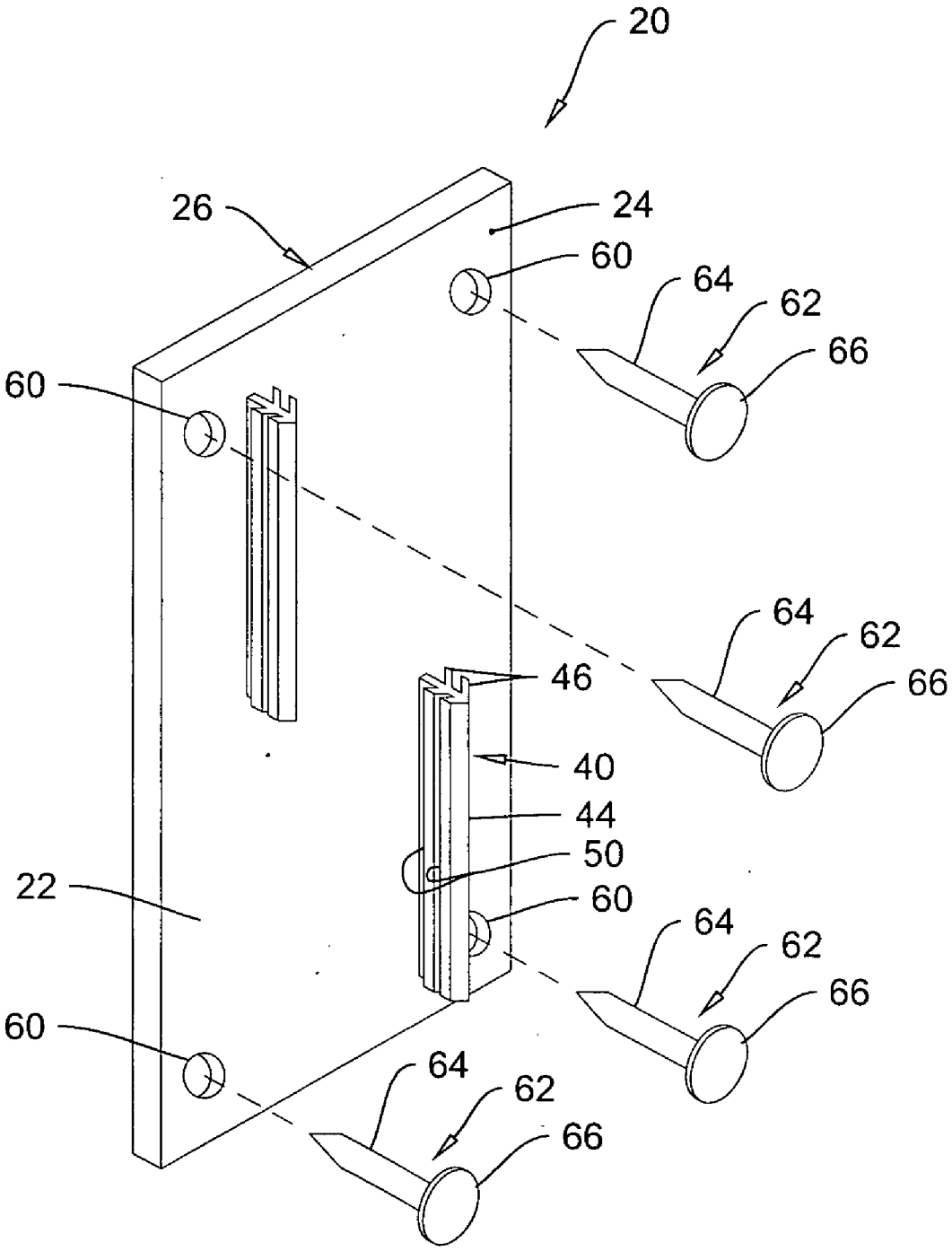

Fig.4

FASTENER

BACKGROUND OF THE INVENTION

[0001] 1. Field of Invention

[0002] The present invention relates to drywall in general and in particular to a fastener for use in hanging drywall from studs or other structural wall elements.

[0003] 2. Description of Related Art

[0004] Wall cladding material is a well known and commonly used building method.

[0005] Under such a method, a wall cladding, such a as gyprock, or the like is secured or fastened to an underlying structural member, such as a wall stud or the like. Common the wall studs are formed of wood or steel and the wall cladding is secured thereto by the use of nails or screws.

[0006] Disadvantageously, nails and screws are time consuming to secure through the cladding material and into the wall stud. Additionally, when nails and screws are utilized to secure the wall cladding, the screw or nail must be driven through the cladding material from the free or finished side. Such a process thereby requires that a worker cover the nail or screw and thereafter refinish the finished surface of the cladding material. Such a process adds further cost and time required to complete the installation and also increases the risk of surface imperfections on the finished wall.

[0007] Previous attempts to solve the above problem have not been adequate. Some previous solutions have utilized a plate adapted to engage the wall stud having moveable fingers which may be rotated into the wall cladding material as the wall cladding and fastener are pressed onto the stud. Such devices however require that the wall cladding be held firmly against the apparatus as it is inserted over the wall stud as depth to which the fingers are inserted into the wall cladding may not thereafter be readjusted. Accordingly, such devices may be prone to having the wall board held at a distance spaced away from the wall studs. Examples of such devices may be found in U.S. Pat. Nos. 3,020,602 issued Feb. 13, 1062 to Siering and 2,197,750 issued Apr. 16, 1940 to Lagaard.

[0008] Other previous solutions have been to provide spike-like members to pierce the wall cladding. Such solutions have had difficulty maintaining a sufficient hold on the cladding material to adequately hold it proximate to the wall stud. Other disadvantages of spikes is the low surface area provided by such spikes and therefore such spikes provide a reduced holding force on the wall cladding.

SUMMARY OF THE INVENTION

[0009] According to a first embodiment of the present invention there is disclosed an apparatus for securing a wall cladding panel against a wall structure member. The apparatus comprises a plate fastenable to the wall structure member and at least one elongate blade extending from the plate for embedding within the wall cladding panel.

[0010] The elongate blade may extend substantially perpendicularly from the plate. The elongate blade may extend substantially parallel to the wall structure member.

[0011] The elongate blade may have a length of between 1 and 4 inches. The elongate blade may have a height of between ¼ and ½ inches. The elongate blade may be rigid.

[0012] The elongate blade may further include at least one retention member extending therealong for retaining the blade within the wall panel. The apparatus may further comprise at least one retention member along each opposed side of the elongate blade.

[0013] Each retention member may comprise a flap extending from the elongate blade. Each flap may have a distal edge angularly disposed towards the plate. The elongate may include two flaps on each opposed side thereof. The flaps may be flexible.

[0014] The apparatus may include two elongate blades. The two elongate blades may be substantially parallel to each other. The two elongate plates may be lengthways spaced apart from each. The two elongate plates may be spaced apart from each other in a direction transverse to their lengths.

[0015] The plate may further include at least one bore for passing a fastener therethrough for securing the plate to the wall structure member. The plate may include at least one spike extending from a rear surface of the plate for embedding within the wall structure member.

[0016] Other aspects and features of the present invention will become apparent to those ordinarily skilled in the art upon review of the following description of specific embodiments of the invention in conjunction with the accompanying figures.

BRIEF DESCRIPTION OF THE DRAWINGS

[0017] In drawings which illustrate embodiments of the invention wherein similar characters of reference denote corresponding parts in each view,

[0018] FIG. **1** is a perspective view of a wall construction having a plurality of wall studs with a wall cladding secured thereto by an apparatus according to a first embodiment of the present invention.

[0019] FIG. **2** is a perspective view of an apparatus for securing the wall cladding panel against the wall structure member according to a first embodiment of the present invention.

[0020] FIG. **3** is a cross sectional view of the apparatus of FIG. **2** taken along the line **3-3**.

[0021] FIG. **4** is a perspective view of an apparatus for securing the wall cladding panel against the wall structure member according to a further embodiment of the present invention.

DETAILED DESCRIPTION

[0022] Referring to FIG. **1**, a wall, generally indicated at **10** may be formed of a plurality of wall structure members or wall studs **8** and a panel of a cladding material **6** applied thereto. The cladding panel **6** is commonly gypsum board or drywall but may also be selected from any other commonly known material such as plywood, particle boards or the like. An apparatus for securing the cladding panel **6** to the studs is generally indicated at **20**.

[0023] With reference to FIG. **2**, the apparatus **20** comprises a plate **22** having front and rear surfaces, **24** and **26**, respectively. The plate **22** has at least one elongate blade **40** extending from the front surface **24** for embedding within the wall cladding panel **6** and at least one fastener **28** extending from the rear surface **26** for embedding within the wall stud

[0024] As illustrated, the plate may be substantially rectangular, although it will be appreciated that other outline shapes may be utilized as well, such as, by way of non-limiting example, circular, square, oval, octagonal or irregular. As used herein, the height of the plate is defined along a direction

parallel with the elongate blades **40** such that in an installed position, the elongate blades **40** are substantially vertical. The plate **22** may have a width corresponding substantially to the width of a conventional wall stud, such as, by way of non-limiting example, 1 and ½ inches (25 and 12 mm) wide although it will be appreciated that other widths may be useful as well. The plate **22** may have a height selected to permit at least one elongate blade to be utilized such as by way of non-limiting example between 3 and 8 inches (76 and 203 mm), although it will be appreciated that other heights may be utilized as well. The plate **22** may have a thickness and be formed of a material selected to provide sufficient strength to the support the blades and the wall cladding panels according to known methods to those of skill in the art. By way of non-limiting example, the plate may have a thickness of between 1/32 and ⅛ inches (0.8 and 3 mm). Also by way of non-limiting example, the plate may be formed of steel, galvanized steel, stainless steel, aluminium, brass, plastic, ceramics or composite materials. It will be appreciated that other thicknesses and material selections may be useful as well.

[0025] As illustrated in FIG. **2**, the plate includes a plurality of fastener **28** or spikes extending from the rear surface **26** thereof. Although the fasteners **28** are illustrated in FIG. **3** as a spike, it will be appreciated that other fastener types may be utilized as well, such as, by way of non-limiting example, barbs, blades or the like. The fasteners **28** may optionally include barbs **30** thereon for retaining the fastener **28** within the stud. The length of the fasteners may be selected according to known methods to ensure that the spike is retained within the stud. By way of non-limiting example, the fastener may have a length of between 1 and 4 inches (25 and 101 mm).

[0026] With reference to FIGS. **2** and **3**, the elongate blades **40** comprise elongate planar members **42** extending substantially perpendicularly from the front surface **24** of the plate **22**. The planar members **42** has a distal end **44** which may be sharpened so as to facilitate embedding the elongate blade **40** within the wall cladding panel **6**. The planar member **42** may be secured to the plate **22** according to known methods, such as, by way of non-limiting example, welding, adhesives or the like or may optionally be co-formed with the plate **22**.

[0027] The planar member **42** is substantially rigid and has a height selected to be embeddable within the wall cladding panel, such as by way of non-limiting example, between ¼ and ½ inch (6 and 13 mm) although it will be appreciated that other heights may be useful as well. The length of the planar member is selected to provide a firm connection between the elongate blade **40** and the wall cladding panel **6**. By way of non-limiting example, the planar member **42** and therefore the elongate blade **40** may have a length of between 1 and 4 inches (25 and 101 mm) although it will be appreciate that other lengths may be useful as well. The planar member may have a thickness selected to be between 1/32 and ⅛ of an inch (0.8 and 3 mm) although it will be appreciated that other thicknesses may be useful as well.

[0028] The elongate blade **40** may include flaps **46** extending therefrom. As illustrated in FIG. **3**, the elongate blade may include two flaps **46** extending from each side, although it will be appreciated that other quantities may be utilized as well. The flaps **46** extend the length of the elongate blade **40** and may be flexible so as to assist in inserting the elongate blade into the wall cladding panel **6**. The flaps **46** have a distal edge **50** (shown in FIGS. **2** and **4**) and a width between the distal edge and the planar member **42**. The width may be selected to be between 1/32 and ⅜ inches (0.8 and 9 mm). The flaps **46** may have a thickness selected to be between selected to be between 1/64 and 1/16 of an inch (0.4 and 1.5 mm) although it will be appreciated that other thicknesses may be useful as well.

[0029] As illustrated in FIG. **3**, the flaps **46** may be angularly oriented relative to the planar member **42** by an angle generally indicated at **48**. The angle **48** may be selected to be between 10 and 90 degrees although it has been found that an angle of between 30 and 60 degrees has been particularly useful. The elongate blades **40** may be formed of any suitable material such as, by way of non-limiting example, steel, galvanized steel, stainless steel, aluminium, brass, plastic, rubber, ceramics or composite materials. The flaps **46** may be secured to the planar member **4** according to known methods, such as, by way of non-limiting example, welding, adhesives or the like or may optionally be co-formed with the plate **42**.

[0030] As illustrated herein, the apparatus **20** may include 2 elongate blades **40** extending from each plate **22**. The two elongate blades **40** may be substantially aligned with each other in a vertical direction in which orientation, it will be appreciated is parallel to the wall support member **8** or stud. As illustrated, the two elongate blades may be offset from each other both in a direction along their length as well as transverse to their length. This will permit each elongate blade **40** to be engaged within an adjacent wall cladding panel such that the gap between the two wall panels will be located between the elongate blades **40** in parallel thereto. The elongate blades **40** may also optionally overlap each other along their lengths or in any other orientation as required by the application.

[0031] In operation, the apparatus **20** may be secured to a wall stud **8** by pressing, hammering or otherwise inserting the fasteners **28** thereinto according to known methods. As illustrated in FIG. **3**, the fasteners **28** may also be passed through a vapour barrier **4** located between the apparatus **20** and the stud **8**. To secure a wall cladding panel **6** to the apparatus **20**, the wall cladding panel may be located proximate to the apparatus **20** and thereafter presses against the apparatus such that the elongate blades are embedded within the wall cladding panel **6** without extending therethrough. Thereafter, the backwardly inclined flaps **46** will retain the wall cladding panel **6** against the apparatus and thereby support it to form the wall surface. It will be appreciated, that should the wall panel **6** be not retained close enough to the stud **6** by the above operation, further pressure may be applied to the outside surface to press the wall cladding panel further upon the elongate blades **40**. The quantity of apparatuses **20** required to support a wall cladding panel **6** will vary depending upon the thickness and type of the wall cladding panel. By way of non-limiting example, for use with conventional gypsum board, 8 apparatuses may be utilized per standard gypsum board panel. It will also be appreciated that the apparatus of the present invention may be utilized to support cladding panels for use in forming ceilings or other surfaces.

[0032] With reference to FIG. **4**, an alternative embodiment of the present invention is illustrated having removable fasteners **62**. As illustrated in FIG. **4**, the plate **22** may include a plurality of bores **60** extending therethrough sized to receive the fasteners **62**. The fasteners **62** may have a shaft portion **64** and a head portion **66** wherein the shaft portion is sized to be received within the bores **60**. The fasteners **62** may comprise, nails, screws or the like as are commonly known in the art. In

operation, the fastener **62** is passed through the bores into the stud to secure the plate **22** to the stud or other wall structure member. Although the apparatus is illustrated in FIG. **4** as having 4 bores and fasteners, it will be appreciated that the apparatus may include any number of bores and fasteners as are required may be utilized as well.

[0033] While specific embodiments of the invention have been described and illustrated, such embodiments should be considered illustrative of the invention only and not as limiting the invention as construed in accordance with the accompanying claims.

What is claimed is:

1. An apparatus for securing a wall cladding panel against a wall structure member, the apparatus comprising:

a plate fastenable to the wall structure member; and

at least one elongate blade extending from said plate for embedding within said wall cladding panel.

2. The apparatus of claim **1** wherein said elongate blade extends substantially perpendicularly from said plate.

3. The apparatus of claim **1** wherein said elongate blade extends substantially parallel to said wall structure member.

4. The apparatus of claim **1** wherein said elongate blade has a length of between 1 and 4 inches.

5. The apparatus of claim **1** wherein said elongate blade has a height of between ¼ and ½ inches.

6. The apparatus of claim **1** wherein said elongate blade is rigid.

7. The apparatus of claim **1** wherein said elongate blade further includes at least one retention member extending therealong for retaining said blade within said wall panel.

8. The apparatus of claim **7** further comprising at least one retention member along each opposed side of said elongate blade.

9. The apparatus of claim **8** wherein each retention member comprises a flap extending from said elongate blade.

10. The apparatus of claim **9** wherein each flap has a distal edge angularly disposed towards said plate.

11. The apparatus of claim **10** wherein said elongate includes two flaps on each opposed side thereof.

12. The apparatus of claim **11** wherein said flaps are flexible.

13. The apparatus of claim **1** wherein said apparatus includes two elongate blades.

14. The apparatus of claim **13** wherein said two elongate blades are substantially parallel to each other.

15. The apparatus of claim **14** wherein said two elongate plates are lengthways spaced apart from each.

16. The apparatus of claim **14** wherein said two elongate plates are spaced apart from each other in a direction transverse to their lengths.

17. The apparatus of claim **1** wherein said plate further includes at least one bore for passing a fastener therethrough for securing said plate to said wall structure member.

18. The apparatus of claim **1** wherein said plate includes at least one spike extending from a rear surface of said plate for embedding within said wall structure member.

* * * * *