May 20, 1958 L. M. STABHOLC 2,835,247

LUMBAR TRACTION APPARATUS

Filed Aug. 28, 1956 2 Sheets-Sheet 1

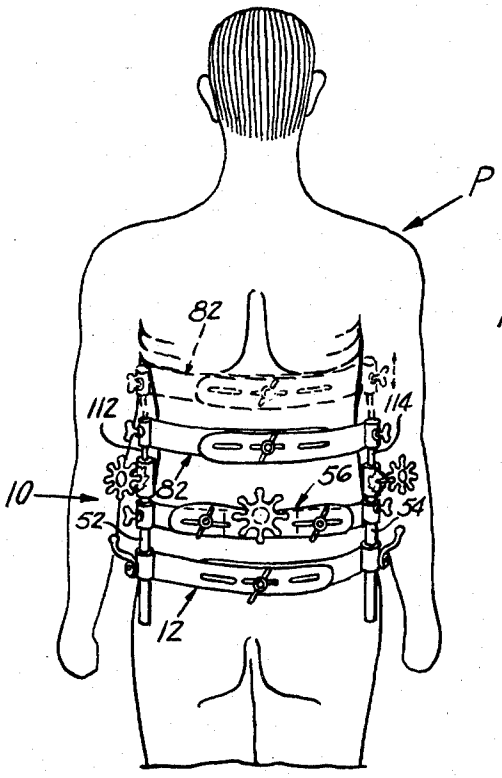

FIG. 1

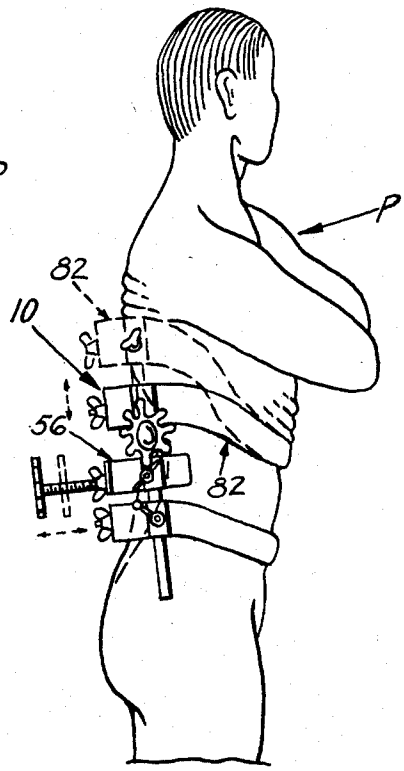

FIG. 2

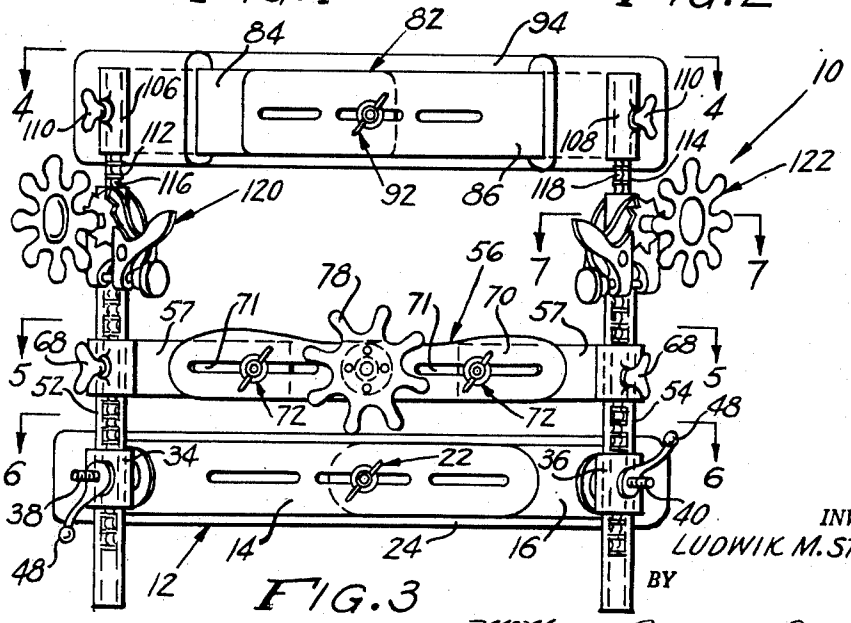

FIG. 3

INVENTOR.
LUDWIK M. STABHOLC
BY
McMorrow, Berman & Davidson
ATTORNEYS

May 20, 1958 L. M. STABHOLC 2,835,247

LUMBAR TRACTION APPARATUS

Filed Aug. 28, 1956 2 Sheets-Sheet 2

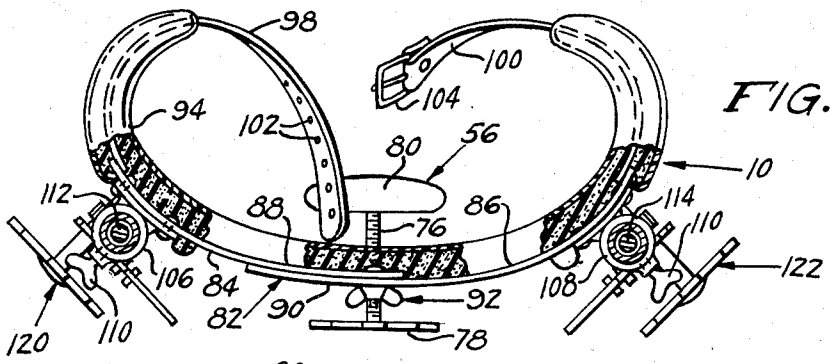

FIG. 4

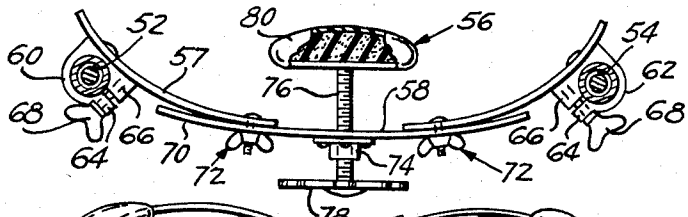

FIG. 5

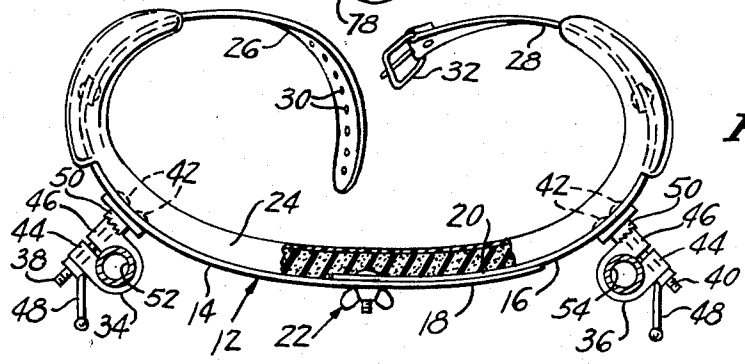

FIG. 6

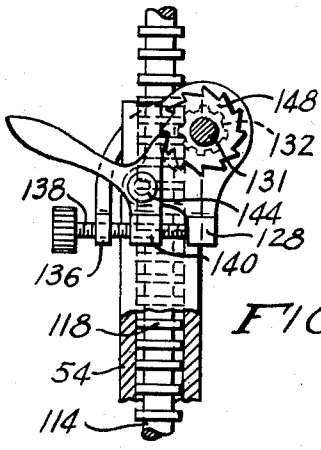

FIG. 8

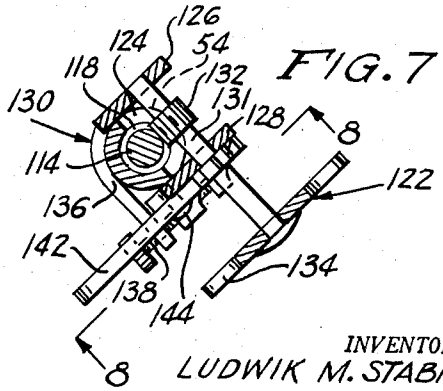

FIG. 7

INVENTOR.
LUDWIK M. STABHOLC
BY

McMorrow, Berman & Davidson
ATTORNEYS

United States Patent Office

2,835,247

Patented May 20, 1958

1

2,835,247

LUMBAR TRACTION APPARATUS

Ludwik M. Stabholc, Nathania, Israel

Application August 28, 1956, Serial No. 606,592

5 Claims. (Cl. 128—78)

This invention relates generally to surgical braces, and is more particularly concerned with a lumbar traction apparatus for applying traction to the lower lumbar region of the spine for the purpose of curing back-bone diseases (lumbar region) and especially disc-herniation.

A primary object of invention is to provide lumbar traction apparatus which incorporates means including belt assemblies to be disposed in spaced vertical relationship about the lower and upper waist portions of a patient, means extending therebetween for applying force or traction longitudinally of the spine of a patient, and further including a lordosis pad assembly for controlling the forward convexity of the spine of a patient.

Another object of invention in conformance with that set forth is to provide in lumbar traction apparatus of the character involved means for adjusting said apparatus to conform to individuals of varying stature.

Other objects and advantages of the invention in conformance with that set forth reside in the specific structural details of the novel cooperating structure of the same.

These together with other objects and advantages which will subsequently become apparent reside in the details of construction and operation as more fully hereinafter described and claimed, reference being had to the accompanying drawing forming a part hereof, wherein like numerals refer to like parts throughout, and in which:

Figure 1 is a rear elevational view of a person's body showing the novel lumbar traction apparatus disposed thereon, and showing in dotted lines the position assumed when traction is applied therewith;

Figure 2 is a side elevational view of an individual upon which the lumbar traction apparatus is applied, again showing in dotted lines the position assumed by the apparatus when traction is applied;

Figure 3 is an enlarged rear elevational view of the novel lumbar traction apparatus;

Figure 4 is a top plan view of the lumbar traction apparatus looking substantially from line 4—4 of Figure 3, portions being broken away and shown in section for clarity;

Figure 5 is a sectional view taken substantially on line 5—5 of Figure 3, portions being broken away and shown in section for clarity;

Figure 6 is a sectional view taken substantially on line 6—6 of Figure 3, portions being broken away and shown in section for clarity;

Figure 7 is an enlarged fragmentary sectional view taken substantially on line 7—7 of Figure 3; and

Figure 8 is a fragmentary sectional view taken substantially on line 8—8 of Figure 7, portions being broken away and shown in section for clarity.

Referring to the drawing in detail, a patient upon which the novel lumbar traction apparatus is to be disposed is indicated generally at P, said patient having disposed between his upper and lower waist portions the novel lumbar traction apparatus indicated generally at **10**.

2

The lumbar traction apparatus comprises a lower or fixed support belt assembly **12**, said belt assembly comprising a pair of arcuate plate elements **14** and **16** which include overlapped end portions **18** and **20**, respectively, which incorporate therein longitudinally extending slot portions, see Figures 3 and 6, which have extending therethrough a suitable wing nut and bolt assembly **22** permitting longitudinal adjustment of the belt assembly **12** for accommodation of patients of varying girths. The plate elements **14** and **16** have disposed thereon suitable padding **24** for preventing chafing of the patient, and have suitably secured at opposite ends flexible straps **26** and **28**, respectively, which respectively incorporate a plurality of longitudinally spaced holes **30** and a buckle assembly **32**. The lower belt assembly **12** is normally secured about the lower waist portion of the patient as clearly seen in Figures 1 and 2.

Suitably secured in laterally extending relationship from the outer surface of the belt assembly **12** i. e. on the plate elements **14** and **16**, respectively, are clamp sleeve elements **34** and **36** being secured to laterally extending threaded support shafts **38** and **40** which are fixedly secured by means of rivets **42** on the aforementioned plate elements **14** and **16**. The clamp sleeve elements **34** and **36** have a substantially U-shaped configuration, see Figure 6, opposite leg portions **44** and **46** of which having a transverse bore therethrough received on the threaded shafts **38** and **40**, and a suitable hand manipulable adjusting nut **48** which is threadedly disposed on the shafts **38** and **40** for urging the leg portions **44** and **46** of the clamping sleeve elements **34** and **36** toward each other. The threaded shafts **38** and **40** incorporate serrated annular base-portion **50** which cooperates with a serrated outer surface portion on the legs **46**, see Figure 6, thus the clamp sleeve elements **34** and **36** may be rotated about the respective shafts **38** and **40** for accommodating the traction apparatus to varying postures of patients. The apparatus is generally adjusted and fitted to a patient, and thereafter the apparatus is dressed on the patient when the patient is disposed in a substantially vertical erect position.

The clamp sleeve elements **34** and **36** have reciprocably disposed therein tubular guiders **52** and **54**, respectively, which will be disposed on opposite sides of the patient, and which will be vertically adjustable within the clamp sleeve elements, permitting sufficient longitudinal movement for obtaining the required traction to be applied on the patient.

Indicated generally at **56** is an adjustable lordosis pad assembly, said lordosis pad assembly comprising a pair of arcuate plate members **57** and **58** which have suitably secured on the outer surface of opposite ends thereof laterally extending clamp sleeve elements **60** and **62**, respectively, which are circumposed about an intermediate portion of the tubular guides **52** and **54**, respectively, and which incorporates spaced clamp legs **64** and **66** including transverse internally threaded aligned bore portions receiving therethrough an adjustable clamping screw **68**. The plates **57** and **58** have juxtaposed on the outer surface of adjacent ends theerof opposite ends of an arcuate support plate **70** incorporating spaced longitudinally extending slot portions **71** which receive therethrough the bolt portion of wing nut and bolt assemblies **72** extending integral from the outer surface of the adjacent ends of the arcuate plates **57** and **58**. Relative longitudinal movement between the plates **57**, **58** and **70** may be obtained to accommodate the lordosis pad assembly to different size patients. Suitably secured on the outer surface of the plate member **70** is an internally threaded support sleeve element **74** through which extends a threaded adjustable shaft member **76** which extends through a suitable aperture in plate **70**. A suitable

adjusting handle 78 is secured on the outer end of the shaft 76, the opposite end of said shaft 76 having secured thereon a suitable abutment pad 80 for engaging an intermediate portion of the spine and being adjustable toward and away from the spine by manipulating the handle 78 for effecting and forward convexity of the spine of the patient.

Indicated generally at 82 is an upper or movable belt assembly comprised of a pair of arcuate plate members 84 and 86 which respectively include overlapped end portions 88 and 90 each of which including aligned longitudinally extending slot portions through which an adjustable wing nut and bolt assembly 92 extends. The plate elements 84 and 86 are suitably padded at 94 and 96 at their terminal ends and have integrally secured thereto flexible belts 98 and 100, respectively, the belt 98 including a plurality of longitudinally spaced openings or aperture portions 102 engageable with a suitable buckle assembly 104 on the flexible belt 100. The upper belt assembly 82 will be circumposed about an upper waist portion of the patient P, and as will subsequently become apparent force transmitting rods are provided wherein the upper belt assembly 82 will be moved to the dotted line position shown in Figures 1 and 2 applying traction to the spine of the patient.

The plate elements 84 and 86 have suitably secured on an outer surface portion thereof laterally extending clamp sleeves 106 and 108, respectively, which incorporate a transverse threaded portion receiving therein a clamping screw 110 which is engageable with an intermediate portion of a force transmitting rod 112 and 114 which may be vertically adjusted in the clamp sleeve elements 106 and 108 in which they are respectively supported, being adjusted by manipulating said clamp screws 110. The force transmitting rods 112 and 114 are telescopically received within the tubular guides 52 and 54, respectively, each of said rods including on the outer surface thereof longitudinally disposed gear rack portions 116 and 118, respectively.

The tubular guides 52 and 54 incorporate on the upper ends thereof means for extending and retracting the force transmitting rods 112 and 114 within the tubular guides 52 and 54, respectively, said means being indicated generally at 120 and 122, being identical, and accordingly only one of which being described in detail.

The tubular guides 52 and 54 incorporate in the upper ends thereof a diametrical notch portion 124, see Figure 7, and has secured on opposite sides of said notch portion leg portions 126 and 128 of a support bracket indicated generally at 130. Extending transversely and journaled in aligned aperture portions in the leg portions 126 and 128 is a support shaft 131 which has secured on an intermediate portion thereof a gear element 132 which is interengaged with the gear rack 118 of the force transmitting rod 114. Secured on the outer end of the shaft 131 is a suitable handle member 134 which may be rotated for extending and retracting the force transmitting rod 114. It is to be understood that similar structure is incoprorated in the adjusting means 120 for the purpose of adjusting the force transmitting rod 112.

The leg portion 126 of the support bracket 130 includes an integral plate portion 136 extending toward the leg portion 128 and has extending through a suitable internally threaded bore portion a hand manipulable threaded screw element 138 which extends through a lower transverse internally threaded bore portion 140 of a latch lever 142 which is intermediately pivoted at 144 on the outer surface of the leg portion 128. The lever 142 includes a dog portion 146 which is engageable with a toothed wheel element 148 fixedly secured on the shaft 131 in alignment with the latch lever 142. By manipualting the screw 138 the dog portion 146 of the latch lever may be urged into engagement with the toothed wheel 148 thus preventing adjusement of the force transmitting rods, and retaining said rods in a fixed position after traction has been imposed upon a patient upon which the apparatus is disposed. The mechanism of Figures 7 and 8 will permit the apparatus to be selectively adjusted to vary the amount of traction or force applied on opposite sides of a patient, thus proving useful in the cases of disc-herniation, when a patient is inclined to be bent toward one side or the other.

It will be observed that the patient may still have the ability to walk about even after the traction apparatus has been applied.

The foregoing is considered as illustrative only of the principles of the invention. Further, since numerous modications and changes will readily occur to those skilled in the art, it is not desired to limit the invention to the exact construction and operation shown and described, and accordingly all suitable modications and equivalents may be resorted to, falling within the scope of the appended claims:

What is claimed is:

1. Lumbar traction apparatus comprising a lower support belt assembly including means for fixedly securing the same about the lower waist portion of a patient to be treated, an upper belt assembly including means for fixedly securing the same about the upper waist portion of the patient, traction control means extending between the belt assemblies on opposite sides thereof for urging the belts apart and applying traction to the patients lower lumbar region, and an intermediate lordosis pad assembly interposed between the belt assemblies for engagement of an intermediate portion of the patients back for controlling forward convexity of the patients spine, said traction control means comprising a pair of spaced laterally extending sleeve elements on the outer surface of the lower belt assembly, a pair of tubular guides reciprocably retained in the sleeve elements, a pair of force transmitting rods telescopically received in the tubular guides, means on the tubular guides adjustably engaging said rods for extending and retracting the same, and a pair of spaced laterally extending sleeve elements on the outer surface of the upper belt assembly reciprocably retaining the upper end portions of the force transmitting rods therein.

2. Lumbar traction apparatus comprising a lower support belt assembly including means for fixedly securing the same about the lower waist portion of a patient to be treated, an upper belt assembly including means for fixedly securing the same about the upper waist portion of the patient, traction control means extending between the belt assemblies on opposite sides thereof for urging the belts apart and applying traction to the patients lower lumbar region, and an intermediate lordosis pad assembly interposed between the belt assemblies for engagement of an intermediate portion of the patients back for controlling forward convexity of the patients spine, said traction control means comprising a pair of spaced laterally extending sleeve elements on the outer surface of the lower belt assembly, a pair of tubular guides reciprocably retained in the sleeve elements, a pair of force transmitting rods telescopically received in the tubular guides, means on the tubular guides adjustably engaging said rods for extending and retracting the same, and a pair of spaced laterally extending sleeve elements on the outer surface of the upper belt assembly reciprocably retaining the upper end portions of the force transmitting rods therein, said lordosis pad assembly comprising a plate member extending between intermediate portions of the tubular guides and including means on opposite ends thereof for adjustably engaging the same longitudinally of the tubular guides, a transversely adjustable shaft extending through an intermediate portion of the plate member, said shaft including an abutment pad on one end thereof for engagement with the patients back adjacent the area spinal convexity is to be controlled.

3. Lumbar traction apparatus comprising a lower support belt assembly including means for fixedly securing the same about the lower waist portion of a patient to be

treated, an upper belt assembly including means for fixedly securing the same about the upper waist portion of the patient, traction control means extending between the belt assemblies on opposite sides thereof for urging the belts apart and applying traction to the patients lower lumbar region, and an intermediate lordosis pad assembly interposed between the belt assemblies for engagement of an intermediate portion of the patients back for controlling forward convexity of the patients spine, said traction control means comprising a pair of spaced laterally extending sleeve elements on the outer surface of the lower belt assembly, a pair of tubular guides reciprocably retained in the sleeve elements, a pair of force transmitting rods telescopically received in the tubular guides, means on the tubular guides adjustably engaging said rods for extending and retracting the same, and a pair of spaced laterally extending sleeve elements on the outer surface of the upper belt assembly reciprocably retaining the upper end portions of the force transmitting rods therein, said force transmitting rods including a gear rack extending longitudinally on the outer surface thereof, said means on the tubular guides adjustably engaging said rods comprising hand manipulable gear assemblies engageable with the gear racks for extending and retracting said force transmitting rods, and latch means engageable with the gear assemblies for retaining the same in a fixed position relative to the gear racks.

4. Lumbar traction apparatus comprising a lower support belt assembly including means for fixedly securing the same about the lower waist portion of a patient to be treated, an upper belt assembly including means for fixedly securing the same about the upper waist portion of the patient, traction control means extending between the belt assemblies on opposite sides thereof for urging the belts apart and applying traction to the patients lower lumbar region, and an intermediate lordosis pad assembly interposed between the belt assemblies for engagement of an intermediate portion of the patients back for controlling forward convexity of the patients spine, said traction control means comprising a pair of spaced laterally extending sleeve elements on the outer surface of the lower belt assembly, a pair of tubular guides reciprocably retained in the sleeve elements, a pair of force transmitting rods telescopically received in the tubular guides, means on the tubular guides adjustably engaging said rods for extending and retracting the same, and a pair of spaced laterally extending sleeve elements on the outer surface of the upper belt assembly reciprocably retaining the upper end portions of the force transmitting rods therein, said belt assemblies and lordosis pad assembly including overlapping elongated sections, means on the sections of the belt assemblies accommodating for adjustment of the width of said belt assemblies relative to a patients back.

5. Lumber traction apparatus comprising a lower support belt assembly including means for fixedly securing the same about the lower waist portion of a patient to be treated, an upper belt assembly including means for fixedly securing the same about the upper waist portion of the patient, traction control means extending between the belt assemblies on opposite sides thereof for urging the belts apart and applying traction to the patients lower lumbar region, and an intermediate lordosis pad assembly interposed between the belt assemblies for engagement of an intermediate portion of the patients back for controlling forward convexity of the patients spine, said traction control means comprising a pair of spaced laterally extending sleeve elements on the outer surface of the lower belt assembly, a pair of tubular guides reciprocably retained in the sleeve elements, a pair of force transmitting rods telescopically received in the tubular guides, means on the tubular guides adjustably engaging said rods for extending and retracting the same, and a pair of spaced laterally extending sleeve elements on the outer surface of the upper belt assembly reciprocably retaining the upper end portions of the force transmitting rods therein, said sleeve elements on the lower belt assembly being pivotally supported on said belt assembly on a transverse pivot axis portion for disposing the force transmitting rods in angular relationship relative to the longitudinal axis of the spine of a patient wherein traction force applied on the patient may be differentiated on opposite sides of the patients back.

References Cited in the file of this patent

UNITED STATES PATENTS

6,023	Mellish	Jan. 9, 1849
30,601	Wright	Nov. 6, 1860
1,650,650	Pieper	Nov. 29, 1927
1,803,556	Nugent	May 5, 1931