July 3, 1956 P. G. DOOLEY 2,752,753

AIR SWIRLER SURROUNDING FUEL NOZZLE DISCHARGE END

Filed May 26, 1952

FIG. 1

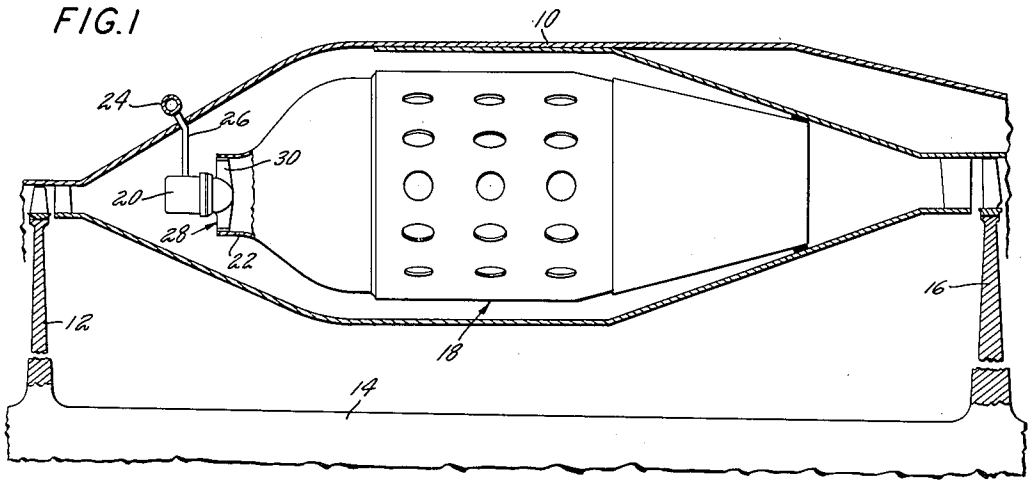

FIG. 2

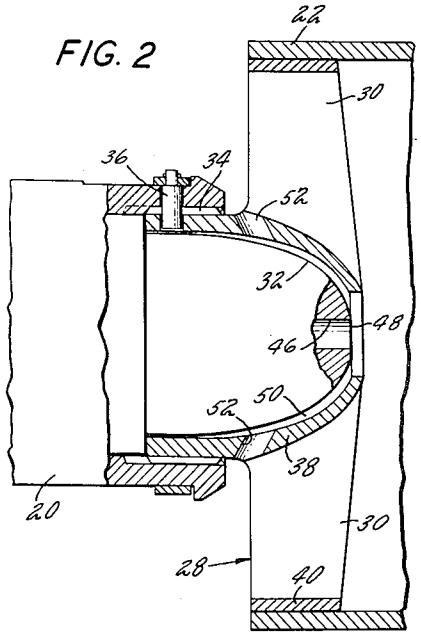

FIG. 3

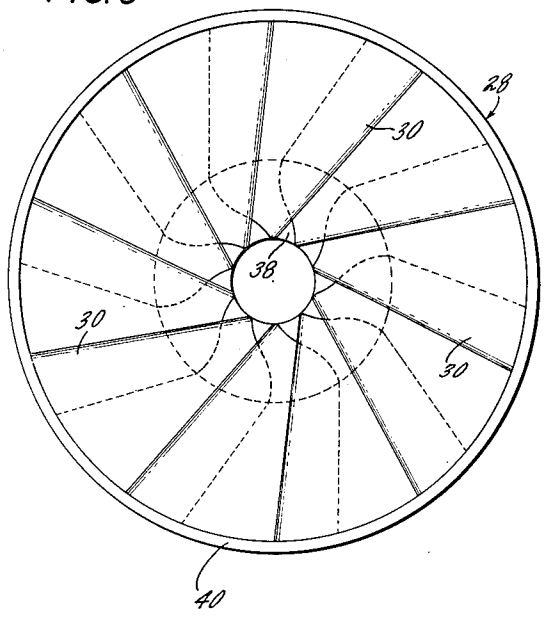

FIG. 4

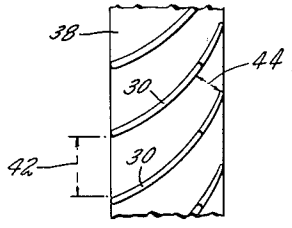

INVENTOR
PHILIP G. DOOLEY
BY Russell M. Lipes, Jr.
AGENT

United States Patent Office

2,752,753

Patented July 3, 1956

2,752,753

AIR SWIRLER SURROUNDING FUEL NOZZLE DISCHARGE END

Philip G. Dooley, Bolton, Conn., assignor to United Aircraft Corporation, East Hartford, Conn., a corporation of Delaware

Application May 26, 1952, Serial No. 290,059

3 Claims. (Cl. 60—39.74)

This invention relates to combustion chambers, more particularly to the construction of swirlers through which primary air is introduced into a combustion chamber.

In a typical combustion chamber used in gas turbine power plants and the like fuel is introduced through a nozzle mounted within the chamber inlet. This nozzle usually is surrounded by an air swirler which has the purpose of imparting a vortical motion to the primary air entering the combustion chamber through the swirler vanes. The swirling action of the incoming air creates turbulence within the combustion chamber inlet and provides a better mixture of fuel and air with a resultant increase in combustion efficiency. A series of flat plates mounted at an angle to the path of the air entering the swirler are usually employed as swirler vanes.

A low pressure area adjacent to the discharge face of the fuel nozzle and within the vortex is created by the vortical motion of the incoming primary air. This area is filled by combustion gases from higher pressure zones in the combustion chamber. These gases contain products of combustion including carbon particles and the momentum of the particles is such that they impinge on the face of the fuel nozzle where they accumulate as a carbon deposit. This accumulation is undesirable as it will build up to the point where it affects the discharge of fuel into the primary air, upsetting the distribution of fuel in the air.

A feature of this invention is a swirler construction which reduces to a minimum the amount of carbon build-up on the fuel nozzle in a combustion chamber. Another feature is a swirler vane construction which imparts a maximum intensity to the primary air with the available pressure drop across the swirler. Still another feature is the use of a cambered swirler vane construction which minimizes the area between the internal diameter of the swirler and the fuel nozzle orifice, which area is the most vulnerable area to carbon build-up.

Other features and advantages will be apparent from the specification and claims, and from the accompanying drawing which illustrates an embodiment of the invention.

In the drawing:

Fig. 1 is a sectional view through the combustion chamber of a gas turbine power plant showing the relative position of the swirler.

Fig. 2 is an enlarged fragmentary section of the swirler along the longitudinal axis of the combustion chamber.

Fig. 3 is a front view of a swirler.

Fig. 4 is a developed view through the swirler vanes.

In Fig. 1 there is indicated generally at **10** the outer casing of an axial flow gas turbine power plant. The last stage of the power plant compressor rotor is shown at **12**, the compressor rotor being connected by shaft **14** to turbine rotor **16**. Interposed between the compressor and the turbine are a plurality of combustion cans mounted in a circle concentric with the axis of shaft **14**, the longitudinal axis of each can being substantially parallel to the axis of the shaft. One of the cans is shown at **18** and has fuel nozzle **20** centrally located within

circular inlet casing **22** through which the primary air enters the can. Fuel is supplied, from a source not shown, through manifold **24** surrounding the power plant and is distributed to fuel nozzle **20** through conduit **26** connecting the manifold and the fuel nozzle. An air swirler **28** surrounds fuel nozzle **20** adjacent to the discharge end of the nozzle, the swirler having a plurality of vanes **30** which impart a swirling or vortical motion to the primary air as it enters the combustion can.

Details of the swirler construction are shown in Fig. 2. The discharge end **32** of fuel nozzle **20** is substantially ellipsoidal in shape and is surrounded by swirler **28** which is connected to the nozzle in any suitable manner, as by threads **34** and locking pin **36**. Air swirler **28** comprises an inner ring **38**, closely conforming to the shape of discharge end **32**, and outer ring **40**. A plurality of vanes **30** extend substantially radially between inner ring **38** and outer ring **40**, each vane being of substantially airfoil cross section and set at an angle to the longitudinal axis of the swirler. The radial height of each vane increases in the downstream direction due to the shape of the inner ring, and the position of the cambered vanes is such that the width of the passages between the vanes is greater at the inlet, as indicated by line **42** in Fig. 4, than it is at the outlet, as indicated by line **44**. The cambered vanes provide a contraction of the swirler air passages in a circumferential direction while the decreasing diameter of inner ring **38** provides an expansion of the passages in a radial direction. However, the dimensions are so proportioned that the outlet area is less than the inlet area, thus increasing the velocity of the air as it passes through the swirler.

The substantially ellipsoidal shape of fuel nozzle discharge end **32** and the closely conforming shape of inner ring **38** of the air swirler practically eliminate any flat surface between the nozzle orifice **46** and the swirler where carbon build-up has been the greatest. The construction of the swirler is such that the low pressure area within the vortex is reduced to a minimum and, further, part of the incoming primary air is directed downward across the discharge face **48** of the nozzle to "wash" the face and prevent carbon build-up. An annular chamber **50** is provided between the fuel nozzle discharge end **32** and inner ring **38** through which incoming air, admitted through ports **52**, can pass. This air also serves to keep the face of the discharge end free of carbon accumulation.

It is to be understood that the invention is not limited to the specific embodiment herein illustrated and described but may be used in other ways without departure from its spirit as defined by the following claims.

I claim:

1. In combination with a fuel nozzle for a combustion chamber, said nozzle having a discharge end the outer surface of which converges toward an orifice through which fuel is discharged, an air swirler surrounding said discharge end and adapted to impart a vortical motion to air passing through said swirler, said swirler comprising an inner ring and an outer ring and a plurality of cambered vanes extending between said rings and defining passages for the flow of air through said swirler, said inner ring closely surrounding and conforming to the shape of said discharge end and extending substantially to said orifice to minimize the area on said discharge end where carbon can accumulate, said air passages increasing in radial height in the direction of airflow by virtue of said inner ring closely surrounding said discharge end and decreasing in width in the direction of airflow by virtue of the position of said cambered vanes, said dimensions being proportioned so that the inlet area of said passages is greater than the outlet area of said passages to increase the velocity of air passing through said swirler.

2. In combination with a fuel nozzle for a combustion chamber, said nozzle having a discharge end the outer surface of which converges toward an orifice through which fuel is discharged, an air swirler surrounding said discharge end and adapted to impart a vortical motion to air passing through said swirler, said swirler comprising an inner ring and an outer ring and a plurality of cambered vanes extending between said rings and defining passages for the flow of air through said swirler, said inner ring closely surrounding and conforming to the shape of said discharge end and extending substantially to said orifice to minimize the area on said discharge end where carbon can accumulate, said air passages increasing in radial height in the direction of airflow by virtue of said inner ring closely surrounding said discharge end and decreasing in width in the direction of airflow by virtue of the position of said cambered vanes, said dimensions being proportioned so that the inlet area of said passages is greater than the outlet area of said passages to increase the velocity of air passing through said swirler, an air passage defined between said inner ring and said discharge end, and means for admitting air to said passage, said passage directing air across said orifice to prevent carbon build-up.

3. In combination with a fuel nozzle for a combustion chamber, said nozzle having a discharge end the outer surface of which converges toward an orifice through which fuel is discharged, an air swirler surrounding said

discharge end and adapted to impart a vortical motion to air passing through said swirler, said swirler comprising an inner ring and an outer ring and a plurality of cambered vanes extending between said rings and defining passages for the flow of air through said swirler, said inner ring closely surrounding and conforming to the shape of said discharge end and extending substantially to said orifice to minimize the area on said discharge end where carbon can accumulate, said air passages increasing in radial height in the direction of airflow by virtue of said inner ring closely surrounding said discharge end and decreasing in width in the direction of airflow by virtue of the position of said cambered vanes, said dimensions being proportioned so that the inlet area of said passages is greater than the outlet area of said passages to increase the velocity of air passing through said swirler, an annular chamber defined between said inner ring and said discharge end, and ports in said inner ring for admitting air to said chamber, said chamber directing air across said orifice to prevent carbon build-up.

References Cited in the file of this patent

UNITED STATES PATENTS

2,545,495	Sforzini	Mar. 20, 1951
2,575,889	Oulianoff	Nov. 20, 1951
2,577,918	Rowe	Dec. 11, 1951
2,586,751	Watson et al.	Feb. 19, 1952