(No Model.) 4 Sheets—Sheet 1.

O. TYBERG.

MILLING MACHINE.

No. 596,670. Patented Jan. 4, 1898.

Fig. 1

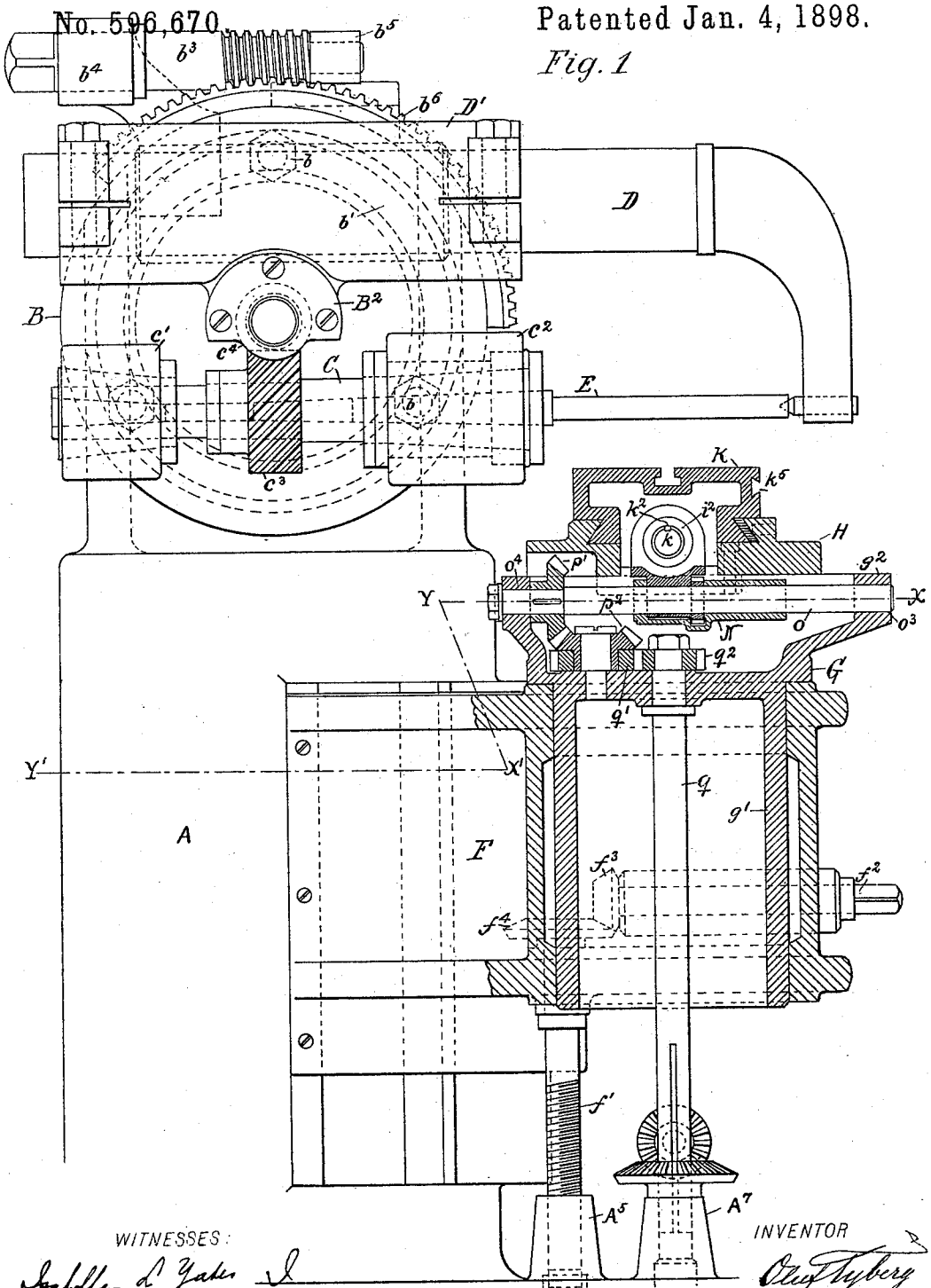

WITNESSES:

Isabella L. Yates

Herbert H. Lottenheim

INVENTOR

Olof Tyberg

By his Attorneys

Baldwin Davidson & Wight

THE NORRIS PETERS CO., PHOTO-LITHO., WASHINGTON, D. C.

(No Model.) 4 Sheets—Sheet 2.

O. TYBERG.

MILLING MACHINE.

No. 596,670. Patented Jan. 4, 1898.

Fig. 2

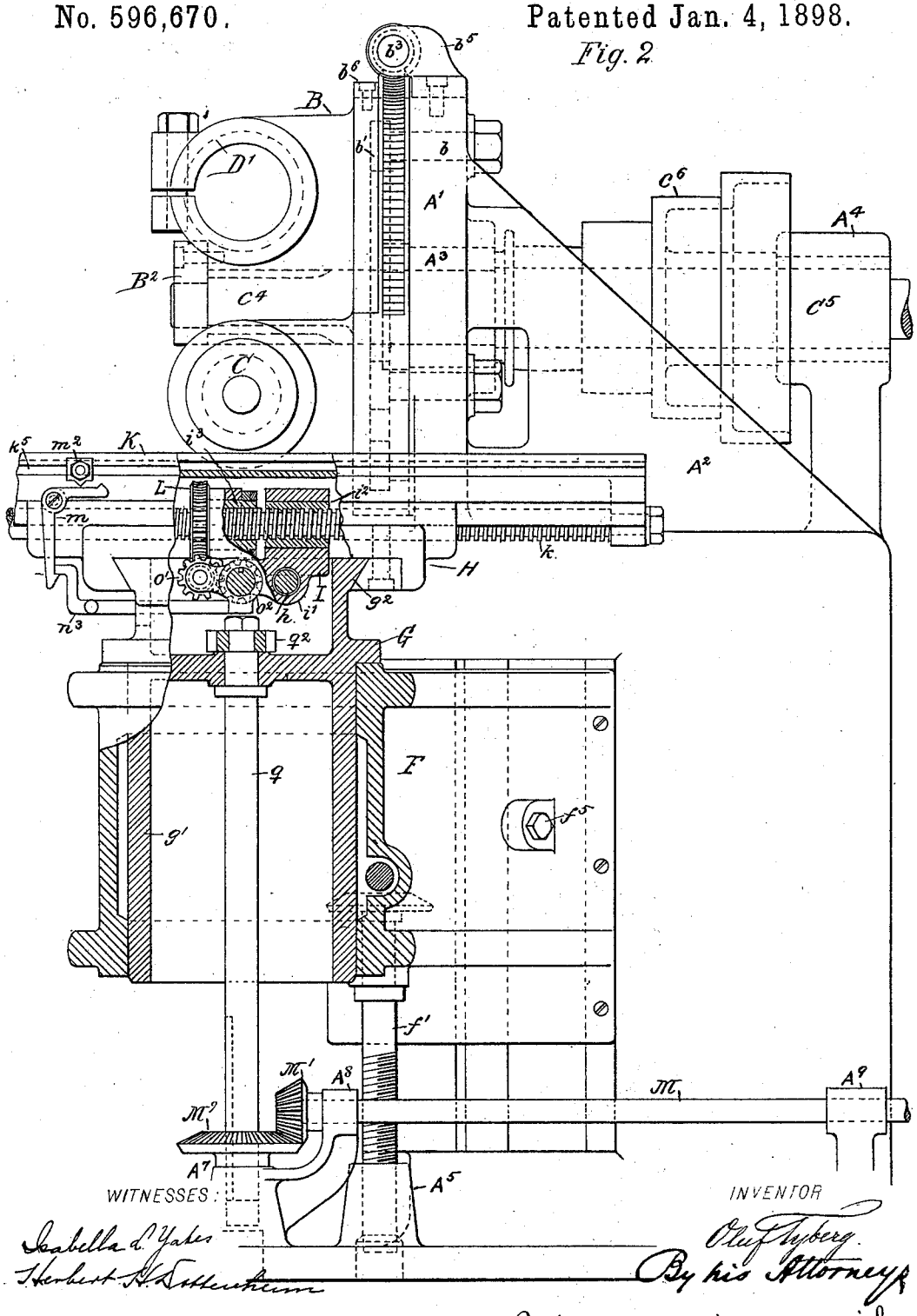

WITNESSES:

Isabella C. Yates

Herbert A. Littenheim

INVENTOR

Olof Tyberg.

By his Attorneys

Baldwin Davidson & Wright.

THE NORRIS PETERS CO., PHOTO-LITHO., WASHINGTON, D. C.

(No Model.) 4 Sheets—Sheet 3.

O. TYBERG.

MILLING MACHINE.

No. 596,670. Patented Jan. 4, 1898.

Fig. 3.

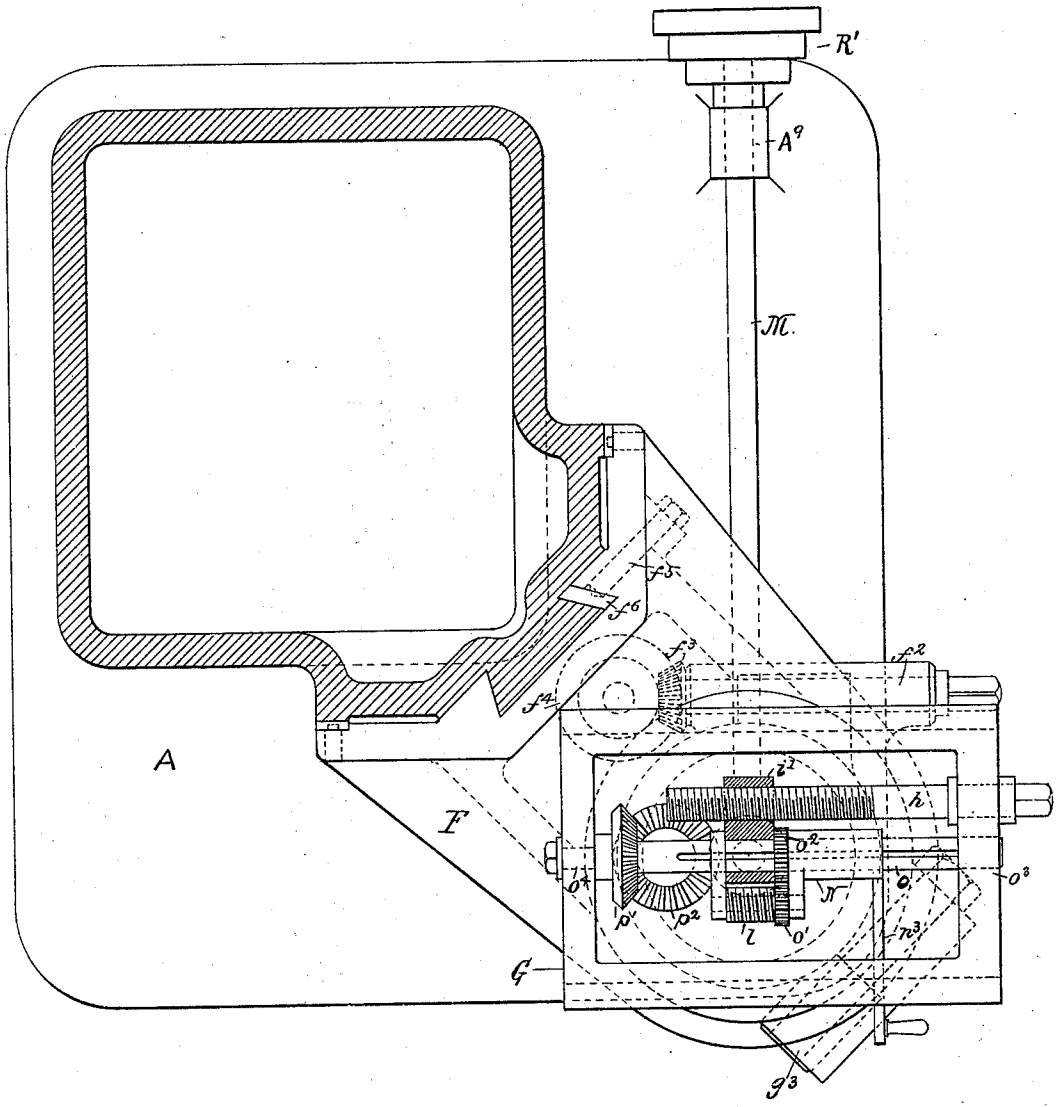

WITNESSES:

Isabella A. Yates.

Herbert H. Bottenheim

INVENTOR

Olof Tyberg

By his Attorneys

Baldwin Davidson & Wright.

THE NORRIS PETERS CO., PHOTO-LITHO., WASHINGTON, D. C

(No Model.) 4 Sheets—Sheet 4.

O. TYBERG.

MILLING MACHINE.

No. 596,670. Patented Jan. 4, 1898.

Fig. 5.

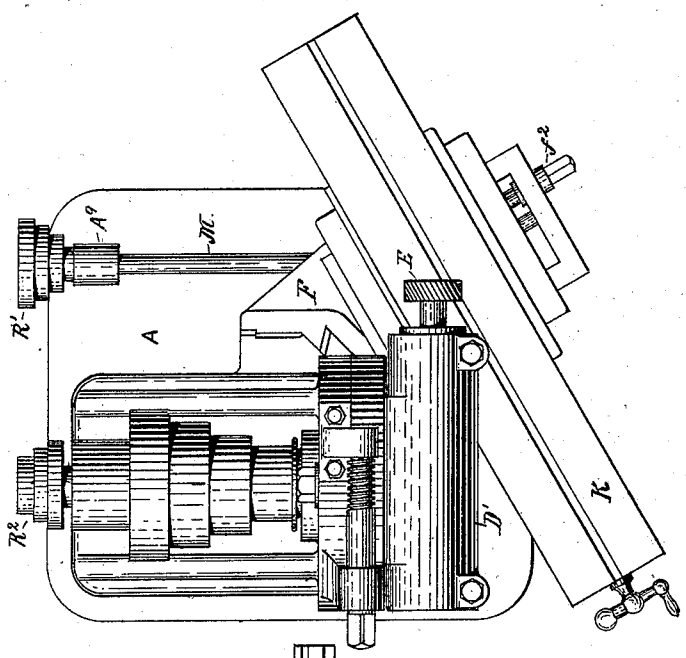

Fig. 4.

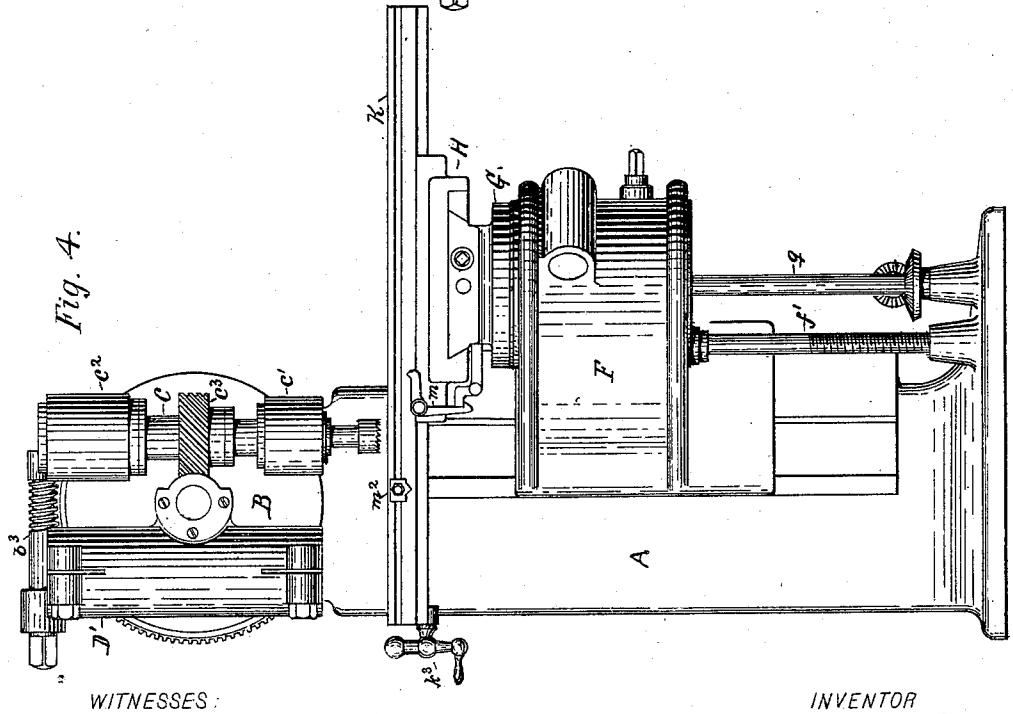

WITNESSES:

Isabella L. Yates

Herbert H. Sattenheim

INVENTOR

Otto Tyberg

By his Attorneys,

Baldwin Davidson & Wright.

THE NORRIS PETERS CO., PHOTO-LITHO., WASHINGTON, D. C.

UNITED STATES PATENT OFFICE.

OLUF TYBERG, OF BROOKLYN, NEW YORK.

MILLING-MACHINE.

SPECIFICATION forming part of Letters Patent No. 596,670, dated January 4, 1898.

Application filed January 22, 1897. Serial No. 620,255. (No model.)

To all whom it may concern:

Be it known that I, OLUF TYBERG, residing in Brooklyn, in the county of Kings and State of New York, have invented a new and useful Improvement in the Construction of Milling-Machines, of which the following is a specification, reference being had to the accompanying drawings.

The object of my invention is to procure a larger range of adjustments without in any way impairing the strength and rigidity so essential in all milling-machines. To accomplish this result, the circular milling-head is mounted to a large vertical face of the column, having a worm and worm-wheel adjustment on the circumference. The milling-spindle and overhanging arm, which both are mounted in this head, are placed on each side of the center of said head, so as to balance one another and also to prevent too great overhang of the bearings. An additional advantage is obtained by this construction, as when the spindle is placed in a vertical position it is brought nearer to the center of the table, thus avoiding as much as possible any vibration of the table. The knee is mounted at an angle of forty-five degrees to the sides of the column, and the center from which the table is made to swing is approximately an equal distance from two converging sides of the column, a construction which enables me to swing the table either in line with or perpendicular to the axis of the milling-spindle and permits me to use any length of table and to feed the table any desired amount in both directions from either one of these as well as any intervening angular position, a very decided advantage, particularly in view of the fact that this additional range is accomplished without increasing the overhang of the knee and still retaining the simple and generally-approved method of mounting the knee in vertical ways to the side of the column in order to obtain the necessary strength and rigidity in the simplest possible manner. This construction also permits of the column being cast in one piece, as the ways are constructed so as to make it possible to slide the knee off the column by only removing the milling-head. I am also able to feed the table in two directions, which always remain perpendicular to each other at whatever angle the table may be placed. It will thus be seen that I am able, without in the least increasing the size of the machine or impairing the strength and rigidity of the most essential parts, to do all the work which the present machines are capable of, and in addition to this perform a large variety of other work which is now only partially accomplished by means of special attachments.

In the accompanying drawings, Figure 1 is a side view of the machine, showing the knee and table in section. Fig. 2 is a front view of the machine, showing the knee and table partly sectioned. Fig. 3 is a plan section on the line X Y of Fig. 1. Fig. 4 is a general view of the machine with milling-head adjusted for end milling and overhanging arm removed. Fig. 5 is a plan view of the machine with the milling-spindle placed horizontally, overhanging arm removed, and the table placed at an angle.

A is the main column of the machine and made one solid casting and having a vertical projection A′, supported by ribs A^2, on the vertical face of which is mounted the circular milling-head B by means of three bolts b, held in the T-groove b' of the milling-head and by means of which the milling-head may be clamped at any desired angle.

By means of a worm-shaft b^3, mounted in bearings b^4 and b^5, bolted to the column, and a worm-wheel b^6, screwed to the circular rim of the milling-head B, the milling-head can be easily turned and readily adjusted.

The milling-head B carries the milling-spindle C, mounted in bearings c' and c^2 and which form part of the head B, and an overhanging arm D, mounted in bearing D′, which is also a part of the head B and which acts as a support for the milling-arbor E. In smaller machines the overhanging arm might be dispensed with.

The milling-spindle C has tapered holes in both ends to fit cutter-mandrels and is driven, through spiral gear c^3, by spiral pinion c^4, which is fastened to the cone-shaft c^5, which is held in the bearings A^3 and A^4 in the column A and supported at its extreme end by bearing B^2, which is bolted to the milling-head B. The cone-shaft c^5 is driven by cone c^6. It will thus be seen that the milling-spindle may be adjusted to stand at any angle between the

vertical and horizontal position and including both of these, as illustrated in Figs. 1 and 4.

The knee F is mounted to the sides of the column and has a vertical adjustment by means of the screw f' in the hub A^5 of the column and operated by the horizontal shaft f^2 through the beveled gear f^3 and pinion f^4, all of which are mounted to the knee. The knee F may be clamped tightly to the frame in any position by means of the screw f^5, bearing against the gib f^6 in Fig. 3.

The knee F is so constructed as to form a seat for the cylinder-block G, which lower portion g' is shaped like a hollow cylinder and is fitted into the seat of the knee and in which it may turn freely or may be clamped tightly at any given angle by means of bolt g^3. (See Fig. 3.)

It will be observed, as distinct from other machines, that the center on which the table turns is a fixed one with relation to the plane in which it swings. This fixed center or axis as well as the axis of the milling spindle C both lie in a plane which is parallel to the vertical face of the projection A' of the column A. In other words, if lines were extended from the two axes they would intersect. This relation between the axes is desirable, as it enables me to do certain kinds of work, such as spiral cutting, with much greater facility.

On the upper portion of the cylinder-block G are ways g^2, on which is mounted, the saddle H and which is fitted so as to slide back and forth on the cylinder-block G by means of screw h, seated in cylinder-block G and fitted into the nut i', which is a lug in the bracket I, fastened to the under side of saddle H and to be described hereinafter. Into the upper portion of the saddle H is fitted the table K and constructed so as to slide in the saddle in a direction perpendicular to that of the saddle H upon the cylinder-block G. By this construction the relative movement of the saddle and the table is continually preserved.

The table K, which is constructed like an ordinary milling-machine table, is fed back and forth by means of a screw k, supported at both ends of the table K and fitted into the nut i^2, which is seated in a lug upon the bracket I and may be operated either by means of hand-wheel k^3 or automatically, in a manner now to be described. The screw may be revolved by the bush i^3, seated in another lug of bracket I. The bush i^3 has a key which fits into the keyway k^2 of the screw k and is revolved by means of worm-wheel L, fastened to it, and a worm l, which is held in the swinging-frame N, to be more fully described hereinafter. The motion to the worm is transmitted from shaft o through two gears o' and o^2. The shaft o is supported at each end in bearings o^3 and o^4 of the cylinder-block G and is driven by beveled gears p' and p^2, which receive the motion from the vertical shaft q through gears q' and q^2. The upper end of shaft q is held in the knee F and is so constructed as to raise and lower with the knee, while the lower end of said shaft may slide up and down in the bearing A^7 of the column A. The motion is transmitted to the shaft q by the horizontal shaft M through the bevel-gears M' and M^2. The shaft M is mounted in bearings A^8 and A^9 of column A and is driven through cone-pulley R', which by belt is connected to another cone-pulley R^2, fastened on the rear end of cone-shaft c^5.

The swinging frame N is mounted on the shaft o and guided by the bracket I, so as to slide along upon the shaft with the saddle H. To the swinging frame N is attached a lever n^3, which extends out through the side of the cylinder-block G and is held by the hook on the lower end of pawl m. When said pawl m engages the lever n^3, the worm l is in engagement with the worm-wheel L. If the pawl m is disengaged, the worm drops out of engagement with the worm-wheel by its own weight. The pawl m may be disengaged automatically by means of an adjustable dog m^2, fitted in a V-groove k^5 of the table K and which as the table feeds forward strikes the upper end of the pawl m and disengages the lever n^3.

I claim as my invention—

1. In a milling-machine, the combination of a column having a vertical face, a circularly-adjustable head clamped to said face, a milling-spindle and an overhanging arm mounted in said head with axes parallel to the vertical face, and means for driving said spindle.

2. In a milling-machine, the combination of a column having a vertical face, a circularly-adjustable head clamped to said face, a milling-spindle and an overhanging arm mounted on each side of the center of the head with axes parallel to the vertical face and means for driving said spindle.

3. In a milling-machine the combination of a column, having a vertical face, a circularly-adjustable head clamped to said face, a milling-spindle and an overhanging arm mounted in said head with axes parallel to the vertical face, means for driving said spindle and mechanism, it being apparent that other equally well-known mechanisms might be employed for adjusting said head circularly.

4. In a milling-machine, the combination of a column having a vertical face, a circularly-adjustable head clamped to said face, a milling-spindle and an overhanging arm mounted on each side of the center of the head with axes parallel to the vertical face, means for driving said spindle and mechanism, it being apparent that other equally well-known mechanisms might be employed for adjusting said head circularly.

5. In a milling-machine, the combination of a fixed vertical column having projecting vertical ways, and a vertical face upon which a circularly-adjustable milling-head is mounted, a vertically-adjustable knee mov-

ing vertically only, mounted directly in or on said ways and having its center line at an angle of about forty-five degrees to the plane of the vertical face upon which the milling-head is mounted, and mechanism acting directly upon the knee to adjust it vertically.

6. In a milling-machine, the combination of a fixed vertical column, having projecting vertical ways, a vertical face upon which a milling-head is mounted, a vertically-adjustable knee, moving vertically only, mounted directly in or on said ways and having its center line at an angle of about forty-five degrees to the plane of the vertical face upon which the milling-head is mounted, and mechanism acting directly upon the knee to adjust it vertically, a sliding table mounted upon said knee, means for revolving said milling-head in a vertical plane, and means for revolving said table in a horizontal plane.

7. In a milling-machine, the combination of a column having a vertical face to which is mounted a head carrying a milling-spindle, means for revolving said head in a vertical plane, a sliding table mounted upon a vertically-adjustable knee, and means for revolving said table around a fixed axis which is approximately an equal distance from two converging sides of the column, and which is so related to the axis of the milling-spindle that lines projected from both of these will intersect.

8. In a milling-machine, the combination of a column having a vertical face to which is mounted a head carrying a milling-spindle, means for revolving said head in a vertical plane, a table, having a sliding movement in two directions, mounted upon a vertically-adjustable knee, and means for revolving said table around a fixed axis which is approximately an equal distance from two converging sides of the column and which is so related to the axis of the milling-spindle that lines projected from both of these will intersect.

9. In a milling-machine, the combination of a column having a vertical face, a head clamped to said face, a milling-spindle mounted in said head with its axis parallel to said vertical face, mechanism for the same reason as above stated for adjusting said head circularly, a sliding table and means for revolving said table from a fixed center which is approximately an equal distance from two converging sides of the column.

10. In a milling-machine, the combination of a column having a vertical face, a head clamped to said face, a milling-spindle mounted in said head with its axis parallel to said vertical face, mechanism for the same reason as above stated for adjusting said head circularly, a table having a sliding movement in two directions and means for revolving said table from a fixed center which is approximately an equal distance from two converging sides of the column.

11. In a milling-machine, the combination of a head carrying a milling-spindle and an overhanging arm, means for revolving said head in a vertical plane, a table and means for revolving said table in a horizontal plane, as well as sliding said table in two directions perpendicular to each other from any angular position of the table.

12. In a milling-machine, the combination of a column, a head clamped to the vertical face of said column, a milling-spindle and an overhanging arm mounted in said head with axes parallel to said face, means for revolving said head in a vertical plane, a table, and means for revolving said table in a horizontal plane.

13. In a milling-machine, the combination of a column, a head clamped to the vertical face of said column, a milling-spindle and an overhanging arm mounted in said head with axes parallel to said face, means for revolving said head in a vertical plane, a table, having a sliding movement in two directions, and means for revolving said table in a horizontal plane.

14. In a milling-machine, the combination of a column, a head clamped to the vertical face of said column, a milling-spindle and an overhanging arm mounted in said head with axes parallel to said face, means for revolving said head in a vertical plane, and a sliding table, and means for revolving said table from a center which is approximately an equal distance from two converging sides of the column.

15. In a milling-machine the combination of a column, a circularly-adjustable head carrying a milling-spindle and an overhanging arm clamped to the face of said column, a sliding table, a sliding saddle mounted on a cylinder-block and fitted into a circularly-adjustable seat of a knee which is vertically adjustable and mounted in ways on the vertical face of said column.

16. In a milling-machine, the combination of a column, a circularly-adjustable head mounted to the vertical face of said column, a milling-spindle and an overhanging arm mounted on each side of the center of said head, a sliding table and means for revolving said table from a center which is approximately an equal distance from two converging sides of the column.

17. In a milling-machine, the combination of a column, a circularly-adjustable head mounted to the vertical face of said column, a milling-spindle and an overhanging arm mounted on each side of the center of said head, a sliding table and means for revolving said table from a center which is approximately an equal distance from two converging sides of the column and means for feeding said table automatically.

18. In a milling-machine the combination of a column, a circularly-adjustable head mounted to the vertical face of said column, a milling-spindle and an overhanging arm mounted on each side of the center of the

head, a table having a sliding movement in two directions and means for revolving said table from a center which is approximately an equal distance from two converging sides of the column.

19. In a milling-machine, the combination of a column having a vertical way located at the corner or angle formed by two adjacent converging faces of the column, a knee mounted directly on said way and capable of vertical motion only thereon, and a sliding table mounted upon said knee and free to turn horizontally upon a pivot, which pivot while vertically adjustable remains in fixed relation to the angle of the converging faces, whereby the table may be turned from a position parallel with one of said converging faces to a position parallel with the other of said converging faces.

In testimony whereof I have hereunto subscribed my name.

OLUF TYBERG.

Witnesses:
CATHARINE GEORGI,
FRANK S. OBER.

Corrections in Letters Patent No. 596,670.

It is hereby certified that in Letters Patent No. 596,670, granted January 4, 1898, upon the application of Oluf Tyberg, of Brooklyn, New York, for an improvement in "Milling-Machines," errors appear in the printed specification requiring correction, as follows: Page 2, lines 117–119, and 127–128, the clause "it being apparent that other equally well-known mechanisms might be employed," and page 3, lines 50–51 and 60-61, the clause "for the same reason as above stated," should be stricken out; and that the said Letters Patent should be read with these corrections therein that the same may conform to the record of the case in the Patent Office.

Signed, countersigned, and sealed this 18th day of January, A. D., 1898.

[SEAL.]

WEBSTER DAVIS,
Assistant Secretary of the Interior.

Countersigned:

A. P. GREELEY,
Acting Commissioner of Patents.