(No Model.)

O. W. PARKER.

WAVE POWER PUMP.

No. 590,072. Patented Sept. 14, 1897.

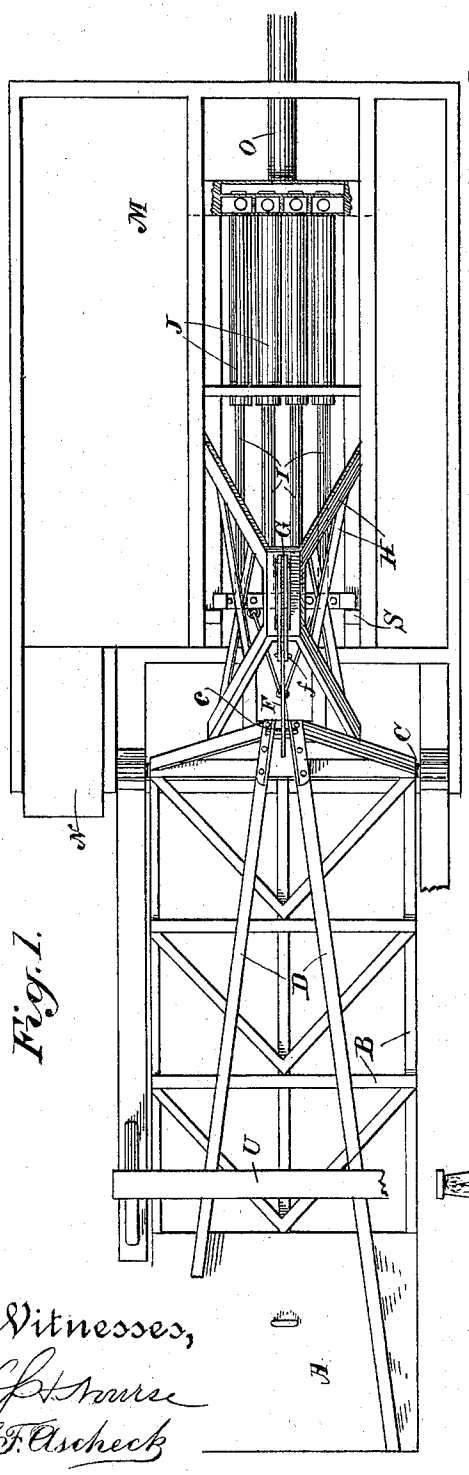

Fig. 1.

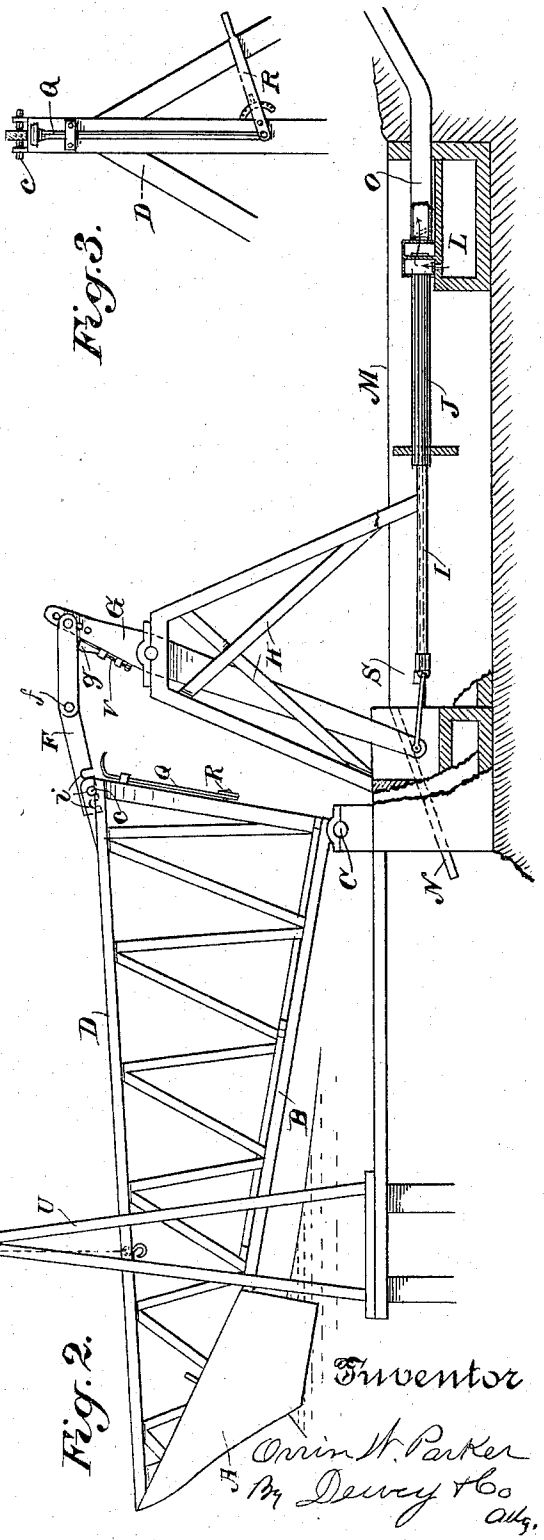

Fig. 2.

Fig. 3.

Witnesses,
J. F. Ashcheck

Inventor
Orrin W. Parker
By Dewey & Co
Atty.

THE NORRIS PETERS CO., PHOTO-LITHO., WASHINGTON, D. C.

UNITED STATES PATENT OFFICE.

ORRIN W. PARKER, OF OAKLAND, CALIFORNIA.

WAVE-POWER PUMP.

SPECIFICATION forming part of Letters Patent No. 590,072, dated September 14, 1897.

Application filed October 8, 1896. Serial No. 608,220. (No model.)

To all whom it may concern:

Be it known that I, ORRIN W. PARKER, a citizen of the United States, residing at Oakland, county of Alameda, State of California, have invented an Improvement in Wave-Power Pumps; and I hereby declare the following to be a full, clear, and exact description of the same.

My invention relates to an apparatus which is especially designed for utilizing the constant motion of the waves and storing up power generated thereby.

It consists, essentially, of a float resting upon the surface of the water at a sufficient distance from the land, a frame extending from the float to a suitable point, where it is fulcrumed, and connections between the frame and a series of pumps by which the pumps are actuated from the float so as to continually throw water into an elevated receptacle or reservoir, and in connection with this certain means for adjusting to suit the high tide or the throw of the stroke to be given the pumps.

Referring to the accompanying drawings, Figure 1 is a plan view of my device. Fig. 2 is an elevation of the same. Fig. 3 is a detail view of the means for regulating the pump-stroke.

In the construction of my apparatus I employ a float A of any suitable size, form, or construction, the requirements of such float being considerable buoyancy and adaptability to be readily moved by the rise and fall of the waves. This float has a horizontal frame B, one end of which is secured to the float and the other extends inwardly to the land or point of support, where by means of journals at C this frame is supported so that they move easily with the float. Two other frames D extend from the outer upper part of the float, converging therefrom to a point at a considerable height above the shaft on which the horizontal frame turns. All these frames are preferably made of a truss-pattern to give them sufficient strength to resist torsion without unduly weighing them down.

In the upper part of the frame C and at the inner end is fixed a stout pin or trunnion *c*, which is adapted to be engaged by notches formed in the adjacent end of a pitman F. The opposite end of this pitman connects with the upper end of a lever G, which lever is fulcrumed upon a frame H, and the lower end of the lever is connected more or less directly with the plungers I of a series of pumps J. These pumps are of any suitable or desired size, and by their connections, as here shown, they work in unison.

The ends of the pump-piston opposite to the connection between the plungers and the swinging lever are connected with a suction-chamber L, which in turn connects with a reservoir M, conveniently situated with relation thereto.

The reservoir may be filled in various ways. If the waves are sufficiently high, the water from the breaking waves may be led through a chute N and delivered into this reservoir, or inwardly-opening valves or other devices may be employed to keep it supplied.

The suction-chamber of the pumps connects directly with this reservoir with suitable inlet-valves, which allows the water to be drawn into the pump-cylinders when the plungers are drawn backward and forced out when the plungers are again moved inwardly.

A common main O receives the water from each of these pumps and conducts it to the desired point of storage, a check-valve being provided to prevent the return of the water after it has been forced into the main.

The pump-plungers are withdrawn by the rising of the float and are forced back to raise the water by the weight of the float and its connections, when the tide recedes, thus operating the pump by gravity instead of the buoyancy of the float.

In order to regulate the length of the pitman and accommodate it and the connecting parts to the rise and fall of the tide, which is sometimes considerable, I have shown the pitman formed of a series of slot channels or notches *i*, adapted to engage the pin *c* on the top of the wave-actuated frame D, so that as the tide rises one of the notches may be disengaged and another one engaged in its place. This is effected by means of a sliding arm Q, movable by means of a lever R, and having the upper end adapted to engage the pitman and raise it whenever desired to change its position. The pitman is also jointed centrally, as shown at *f*, so that if the movement of the float is too violent or great for the de-

sired movement of the pumps the joint in the pitman will allow it to bend or fold so as to relieve the pumps of any strain after the plungers have reached the end of the stroke. In its normal position the joint is slightly below the line of pressure, and this prevents its folding during the stroke. As the stroke is completed, however, a projection or lug *g*, fixed to the upper end of the lever G, strikes the lower part of the pitman and insures the breaking of the lock-joint *f*. The lug *g* may be fixed to a slide V, movable upon the upper end of the lever G, and the pitman connection may be carried by the same slide, so as to maintain its relative position to the lug.

The slide may be raised or lowered on the lever by a screw or other mechanism, so that the relative length from its end to the fulcrum may be varied to accommodate it to different strokes which it may be desired to give the plungers.

Stops S prevent too long a stroke of the plungers if the waves are high.

Either of the pumps may be disengaged, if desired, for the purpose of inspection or repairs without in any way interfering with the others, as each pump has its own set of valves.

If it be desired at any time to raise the float out of water, I employ a frame, as shown at U, consisting of piles driven into the bottom upon each side of the float, and by means of suitable tackle connected with the frame and with the float the latter may be raised at will.

Having thus described my invention, what I claim as new, and desire to secure by Letters Patent, is—

1. The combination, of a float, a horizontal frame extending therefrom and having journaled supports for the inner end, a vertical frame extending above the horizontal one and gradually converging and increasing in depth from the float to the inner end, a pump-cylinder with a plunger working therein, a lever fulcrumed between its ends, a jointed adjustable pitman between one end of said lever and the float-frame, said lever having its opposite end connected with the pump-plunger.

2. The combination of a float adapted to rise and fall by the movement of the waves, a horizontal truss-frame extending inwardly therefrom and having the inner end journaled so as to allow the float to rise and fall, vertically-disposed truss-frames having the outer ends connected with the float and main frame, said frames approaching each other and increasing in depth toward the inner end, pumps connected with the source of water supply and discharge, having plungers reciprocating therein, a lever connected with the pump-plungers at the lower end having the upper end connected with the upper part of the float-actuated frame by a jointed pitman, whereby motion is transmitted to the plungers and its action thereon is limited.

3. The combination of a float adapted to be moved by the rise and fall of the waves, a horizontal truss-frame extending therefrom toward the land, journals about which the inner end is turnable when the float rises and falls, truss-frames extending from the float, converging and increasing in height toward the inner end, a pin or trunnion fixed at the top of said frame, a pitman having different points of connection with said pin whereby the length may be regulated, a lever with which the upper end of the pitman connects, the lower end of said lever being connected with a group of pumps whereby the plungers thereof are reciprocated, and a reservoir or source of supply, and a discharge with which said pumps are connected.

4. The combination of a float adapted to rise and fall by the movement of the waves, a truss-frame extending from the float inwardly toward the shore, horizontally-disposed journals about which the frame and float rise and fall, pumps connected with the source of supply and discharge, plungers reciprocating therein, a lever with the lower end of which the pump-plungers are connected to work in unison, a jointed adjustable pitman having one end connected with the upper end of said lever having the opposite end adapted to engage the pin upon the float-moved lever and a slide and lever-arm whereby the pitman may be raised and shifted to change its connection with the float-frame.

5. The combination of a float adapted to rise and fall by the movement of the waves, a truss-frame extending from the float inwardly toward the shore, horizontally-disposed journals about which the frame and float rise and fall, pumps connected with a source of supply, plungers reciprocating therein, a lever with the lower end of which the pump-plungers are connected, a jointed adjustable pitman connecting the pump-actuating lever with the reciprocating float-actuated frame, a lug upon the lever adapted to contact with the pitman and break the joint at the end of the stroke, and a slide carrying the lug and the pitman connection, and adjustable to or from the lever-fulcrum.

In witness whereof I have hereunto set my hand.

ORRIN W. PARKER.

Witnesses:
S. H. NOURSE,
JESSIE C. BRODIE.