Feb. 21, 1961 T. R. COGGESHALL ET AL 2,972,337

HYDRAULICALLY ACTUATED OPERATING MECHANISM FOR AN ELECTRIC CIRCUIT BREAKER

Filed Nov. 30, 1959 3 Sheets-Sheet 1

Fig. 1.

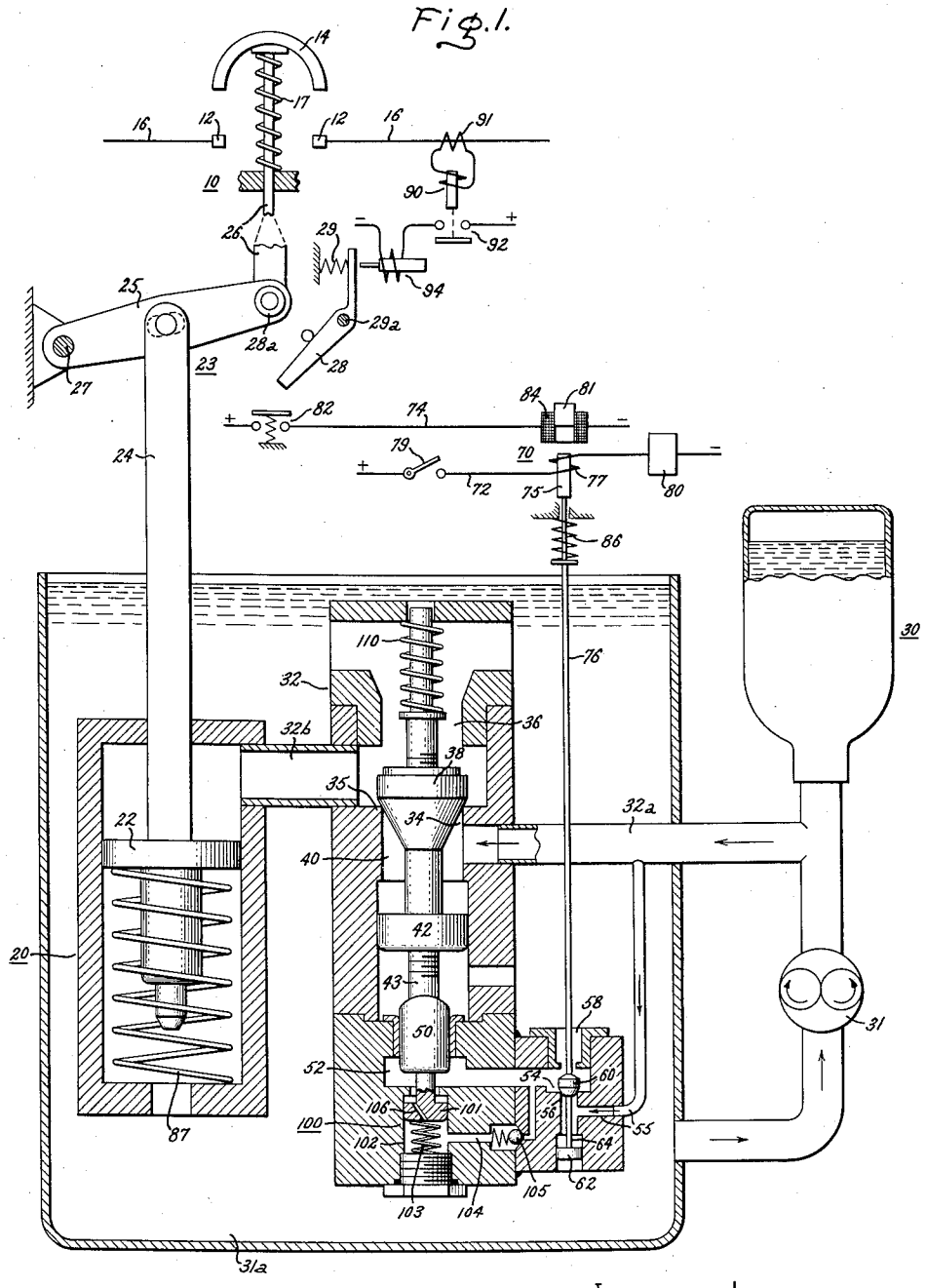


Inventors:
Thellwell R. Coggeshall,
Ugo R. Tognella,
by William Freedman
Their Attorney.

Feb. 21, 1961 T. R. COGGESHALL ET AL 2,972,337

HYDRAULICALLY ACTUATED OPERATING MECHANISM FOR AN ELECTRIC CIRCUIT BREAKER

Filed Nov. 30, 1959 3 Sheets-Sheet 2

Fig. 2.

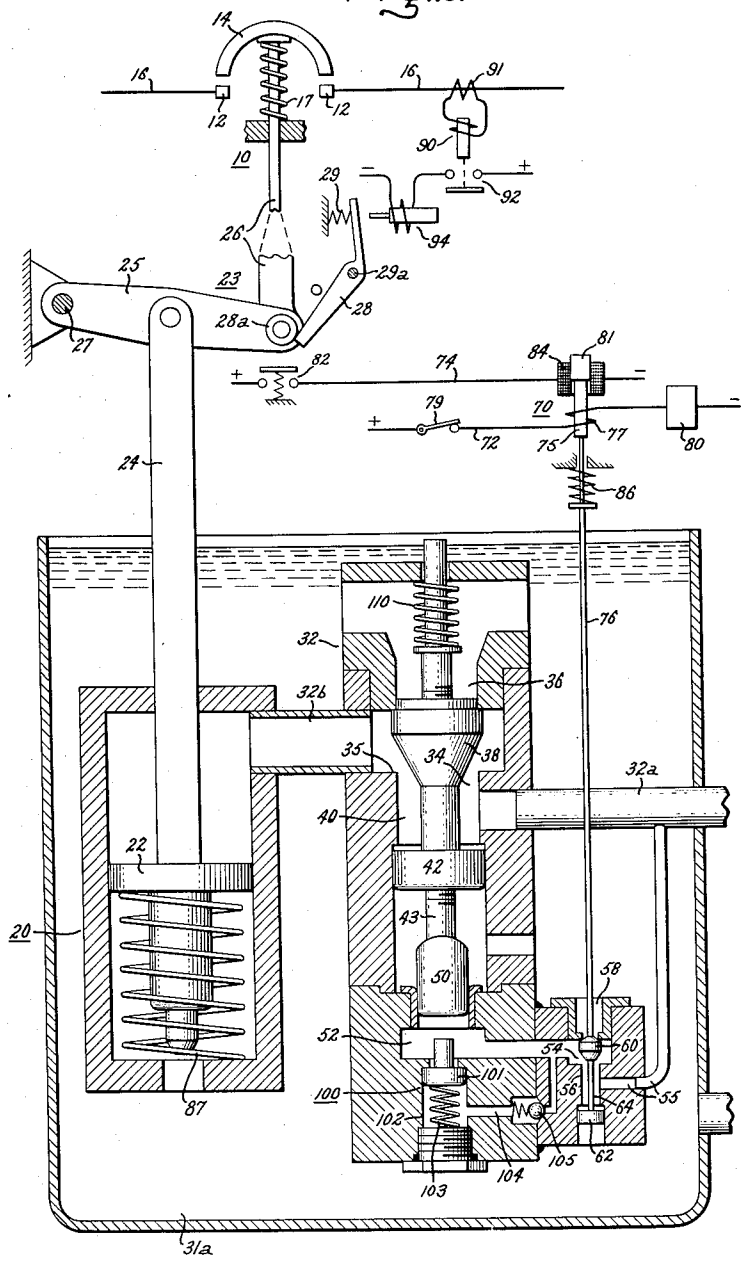


Inventors:
Thellwell R. Coggeshall.
Ugo R. Tognella,
by William Freedman
Their Attorney.

Feb. 21, 1961 T. R. COGGESHALL ET AL 2,972,337

HYDRAULICALLY ACTUATED OPERATING MECHANISM FOR AN ELECTRIC CIRCUIT BREAKER

Filed Nov. 30, 1959 3 Sheets-Sheet 3

Fig. 3.

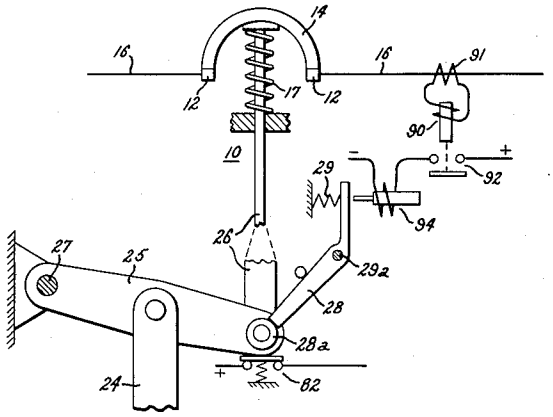


Fig. 4.

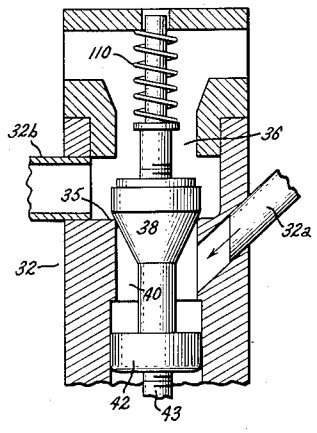


Inventors:
Thellwell R. Coggeshall,
Ugo R. Tognella,
by William Freedman
Their Attorney.

United States Patent Office 2,972,337 Patented Feb. 21, 1961



2,972,337

# HYDRAULICALLY ACTUATED OPERATING MECHANISM FOR AN ELECTRIC CIRCUIT BREAKER

Thellwell R. Coggeshall, Cynwyd, and Ugo R. Tognella, Philadelphia, Pa., assignors to General Electric Company, a corporation of New York

Filed Nov. 30, 1959, Ser. No. 856,122

7 Claims. (Cl. 121—38)

This invention relates to an operating mechanism for an electric circuit breaker and, more particularly, to a hydraulically-actuated operating mechanism of the hydraulically trip-free type.

The usual hydraulically-operated circuit breaker comprises a fluid motor which is operable to close the breaker, an accumulator for supplying pressurized operating liquid to the motor, and valve means for controlling the flow of pressurized liquid from the accumulator to the motor. When opening operation of the valve means occurs, pressurized liquid flows from the accumulator to the motor to cause the motor to produce a circuit-breaker-closing operation. When the breaker-closing operation is completed, closing of the valve means occurs. This valve-closing action not only interrupts communication between the accumulator and the motor but also quickly relieves the pressure in the motor, so that if the breaker is closed on a fault, it can reopen immediately after closing without significant interference from the motor.

In order to accommodate the high rates of flow required for high speed operation of a large circuit breaker and in order to effect the desired high speed venting of the motor after a breaker-closing operation, it has generally been necessary heretofore to rely upon valve means of considerable complexity. For example, in one prior arrangement of which we are aware the main motor-controlling valve is constructed as two separate relatively movable valves, and moreover, requires two separate pilot valves, one for controlling its opening operation and one for controlling its closing operation. This complexity not only results in unduly high manufacturing costs but also detracts from the reliability of the operating mechanism since there are more possible sources of malfunction than with a simpler controlling valve requiring one rather than two pilot valves. Some simplifications can be made by using a sliding type controlling valve rather than a poppet type controlling valve, but sliding type valves have more of a tendency to leak and to become impaired by foreign matter than poppet type valves, and such tendencies can be most disadvantageous.

Accordingly, an object of our invention is to control the operation of a hydraulic actuator for a circuit breaker by means of a simple and rugged controlling valve, preferably of the poppet type, requiring only a single pilot valve for effecting high speed opening and closing operation of the controlling valve.

Another object is to provide a simple and rugged controlling valve of the character set forth in the immediately preceding paragraph which is capable of relieving the pressure in the hydraulic motor at the end of a closing stroke as soon as valve-closing motion begins.

Another object is to construct the controlling valve in such a manner that the seating velocity of the main valve member, i.e., the velocity upon impacting its valve seat, can be effectively reduced without impairing the initial speed at which it effects venting of the motor. This reduction in seating velocity reduces the possibility of the valve seat being damaged through impact.



In carrying out our invention in one form, we control the flow of pressurized operating liquid between the accumulator and the motor by valve means comprising an inlet port interconnecting the accumulator and the motor, a dump port interconnecting the motor and a low pressure region, and a poppet-type valve member movable between a closed position in which it seals off the inlet port and an open position in which it seals off the dump port. The dump port is open when the valve member is in its closed position, and the inlet port is open when the valve member is in its open position. A chamber on the accumulator side of the valve member is normally filled with pressurized liquid acting on the valve member in a valve-opening direction. A balancing piston fixed to the valve member has a working area upon which pressurized liquid in the chamber acts in a direction to hold the valve member closed. This working area is larger than the effective area of the valve member that is exposed to valve-opening pressure from the liquid in the chamber, and, as a result, the pressure of the liquid in the chamber provides a net force acting in a direction to hold the valve member closed. For overcoming this net force to drive the valve member out of its closed position, an actuating piston coupled to the valve member is provided. Pilot valve means is provided for admitting pressurized liquid to this actuating piston to cause the valve member to open the inlet port and close the dump port, thus causing pressurized liquid to flow into the motor and drive the usual piston of the motor through a circuit breaker closing stroke. At the end of the closing stroke, the pressure on the actuating piston is suddenly relieved, and this enables the pressure on the balancing piston to quickly return the valve member to closed position. The valve member, in returning to closed position, opens the dump port prior to reaching closed position.

For a better understanding of our invention, reference may be had to the following description taken in conjunction with the accompanying drawings, wherein:

Fig. 1 shows a circuit breaker operating mechanism embodying one form of our invention. The circuit breaker is shown in open position.

Fig. 2 shows the operating mechanism in a position through which it passes during a closing operation immediately before the contacts of the breaker first touch.

Fig. 3 shows a portion of the circuit breaker when it is in its fully closed position.

Fig. 4 shows a modified form of valve for use in an operating mechanism corresponding to that of Fig. 1.

Referring now to the drawings, there is shown a circuit breaker 10 comprising a set of separable contacts 12 and 14 for controlling a power circuit 16. The contacts 12 are stationary contacts and the contact 14 is a movable contact that is biased by means of a suitable opening spring 17 in a direction away from the stationary contact 12. The movable contact 14 is arranged to be driven from its open position of Fig. 1 through its intermediate position of Fig. 2 into its closed position of Fig. 3 against the bias of spring 17 to close the power circuit 16. Reverse movement of the contacts 14 from the closed position of Fig. 3 toward the position of Fig. 1 under the influence of operating spring 17 interrupts the flow of current through the circuit 16.

Power for driving the contact 14 into its closed position of Fig. 3 is derived from a liquid motor 20 having a piston 22 that is coupled to the movable contact 14 through a linkage generally indicated at 23. This linkage 23, which has been shown in simplified form to facilitate an understanding of the present invention, comprises a piston rod 24, a pivoted lever 25, and a reciprocable operating rod 26. The lever 25 is pivotally mounted at one end on a stationary pivot 27 and is pivotally connected at its other end to the operating rod 26. The

piston rod 24 is pivotally connected to the lever 25 at a point spaced from the pivot 27 and is capable of transmitting clockwise closing motion to the lever 25 when the piston 22 of the hydraulic motor 20 is driven downwardly during a circuit breaker closing operation. Such clockwise motion of lever 25 drives the operating rod 26 downward, and such downward motion forces the movable contact 14 into closing engagement with the stationary contacts 12 while compressing the opening spring 17.

When the closed position of Fig. 3 is reached, a compression spring 29 forces a conventional latch 28 into place behind a roller 28*a* carried by the lever 25. The latch 28, which is mounted on a pivot 29*a*, serves to hold the contact 14 closed against the bias of opening spring 17 after the closing stroke has been completed. Breaker opening is effected simply by driving the latch in a counterclockwise direction off the top of roller 28*a* to remove the restraint of the latch and allow the contact 14 to be driven out of engagement with the contacts 12 by means of the opening spring 17.

For producing downward circuit-breaker-closing motion of the piston 22 of the hydraulic motor 20, pressurized liquid is supplied to the upper side of the piston 22 from a pneumo-hydraulic accumulator 30 via a supply line 32*a*, 32*b*. This accoumulator 30 may be of any suitable conventional design and in the disclosed embodiment contains a pocket of highly pressurized gas trapped above a supply of liquid contained within the accumulator. The accumulator is maintained in a charged, or pressurized, condition by means of a suitable pump 31 which forces liquid from a sump 31*a* into the accumulator whenever pressure in the accumulator falls below a predetermined level, preferably about 2000 p.s.i.

The flow of pressurized liquid from the accumulator 30 to the motor 20 is controlled by valve means 32 disposed between the accumulator and the motor in the supply line 32*a*, 32*b*. This valve means 32 comprises an inlet port 34 interconnecting the accumulator and the motor 20, and a dump port 36 interconnecting the motor 20 and the low pressure sump 31*a*, which is at atmospheric pressure. The flow of liquid through these ports is controlled by poppet valve member 38 that is movable between the closed position of Fig. 1 and the fully-open position of Fig. 2. In the closed position of Fig. 1, the valve member 38 abuts against a valve seat 35 surrounding the inlet port 34, thus closing the inlet port 34 and thereby blocking communication between the accumulator 30 and the motor 20, while permitting free communication between the motor 20 and the sump 31*a* through the dump port 36. In the fully-open position of Fig. 2, the valve member 38 closes the dump port 36 and allows free communication between the accumulator 30 and the motor 20 through the inlet port 34.

On the accumulator side of the valve member 38 there is a chamber 40 that freely communicates with the accumulator 30 and is normally filled with pressurized liquid from the accumulator 30. This pressurized liquid exerts a force directly on the valve member 38 tending to drive the valve member 38 upwardly out of its closed position of Fig. 1. But this opening force is overbalanced by the force that the pressurized liquid in chamber 40 exerts on a balancing piston 42 fixed to the valve member 38 through a piston rod 43 integral with the valve member 38 and the piston 42. With regard to the overbalance of force tending to hold the valve member closed, it is noted that the effective area of the poppet valve member 38 that is exposed to valve-opening pressure from liquid in the chamber 40 is the area of the valve member bounded by the seat 35 of port 34 minus the area of piston rod 43, whereas the working area of the balancing piston 42 that is exposed to valve-closing pressures from the liquid in chamber 40 is the area of the upper face of the piston 42 minus the area of the piston rod 43. Since this working area is greater than the effective area of the poppet valve member, as is evidenced by the slightly enlarged bore of the chamber 40 that receives piston 42, it will be readily apparent that the pressurized liquid in chamber 40 exerts a net force on the valve member 38 tending to hold it in the closed position of Fig. 1. In the disclosed valve, the difference in these total areas is rather small so that the net force holding the valve member 38 closed is correspondingly small. The region of the valve immediately beneath the piston 42 is always freely vented to the sump 31*a*, and thus the liquid in this region plays no significant part in the force relationships described immediately above.

Valve-opening operation is controlled by means of an actuating piston 50 disposed immediately beneath the piston rod 43 of the valve member 38. This actuating piston 50 is separate from the valve member 38 but bears against the lowermost face of the piston rod 43 and is capable of transmitting upward motion to the valve member 38 through the piston rod 43. Such upward motion of the actuating piston 50 is produced by supplying pressurized liquid to the space 52 beneath the piston 50 from the accumulator 30. This pressurized liquid quickly overcomes the above-described net force holding the valve member 38 closed, and thus forces the piston 50 together with the valve member 38 upwardly. The fact that the net force holding the valve member 38 closed is relatively small, as was explained hereinabove, is most advantageous because it enables us to utilize a relatively small actuating piston (50) for overcoming the net closing force. This means that only a relatively small volume of pressurized liquid need by supplied to the actuating piston 50 to enable it to overcome the net closing force and thereby effect valve-opening. The smaller this volume, the higher the speed at which the space 52 beneath the actuating piston 50 can be dumped to permit reclosing of the valve member at the end of a circuit-breaker-closing stroke, as will soon be described.

For controlling the flow of liquid to and from the space 52 beneath the actuating piston 50, a three-way pilot valve 54 is provided in a line 55 leading from the accumulator 30 to the space 52. This pilot valve 54 comprises an inlet port 56 interconnecting the accumulator 30 and the space 52 beneath the actuating piston 50 and a dump port 58 interconnecting the space 52 and the low pressure sump 31*a*, and a movable pilot valve member 60 for controlling flow through these pilot valve ports 56 and 58. When the pilot valve member 60 is in its lower position of Fig. 1, it blocks the flow of liquid through the inlet port 56 but permits free communication between the chamber 52 and the sump 31*a* through the dump port 58. When the pilot valve member 60 is in its upper position of Fig. 2, it closes the dump port 58 to seal off the sump 31*a* from the chamber 52 but allows free communication between the accumulator 30 and the chamber 52 through the inlet port 56.

For providing a force to bias the pilot valve closed under normal conditions a small piston 62 is fixed to the valve member 60 through an integral piston rod 64. This piston 62 is disposed at the lower end of a chamber 66 communicating with the accumulator 30 so that full pressure from the accumulator normally acts on its upper surface. As will be apparent from the slight enlargement at the lower end of chamber 66, this piston 62 has an effective working face slightly larger than the area of the valve member 60 bounded by the inlet port 56, and thus the pressurized fluid in the chamber 66 provides a net force biasing the pilot valve member 60 closed.

For overcoming this net closing force on the pilot valve member 60 so as to effect opening of the pilot valve, a solenoid schematically indicated at 70 is provided. This solenoid 70 is controlled by means of control circuits 72 and 74 corresponding to those shown and claimed in U.S. Patent 2,381,336—Coggeshall, and reference may be had to such patent for a more detailed description of such

circuits. Such circuits 72 and 74 are shown in simplified, schematic form in the present application to facilitate an understanding of the present invention. Referring now to the solenoid 70, it will be noted that the solenoid has an armature 75 mechanically connected to the pilot valve member 60 through a pilot valve operating rod 76, and also has a coil 77 connected in the control circuit 72. This control circuit 72 extends from positive to negative terminals of a suitable control power source and contains a closing control switch 79 connected in series with the solenoid coil 77 and a suitable anti-pump device 80 of convention design such as shown in the Coggeshall patent for preventing inadvertent repetitive closing operations. When the switch 79 is closed, the coil 77 is energized through the circuit 72 and responds by lifting its armature 75 and the pilot valve member 60 to open the pilot valve against the opposition of the previously-described net force holding the pilot valve closed. The anti-pump device 80 opens the energizing circuit 72 immediately after the solenoid has opened the pilot valve and maintains this circuit open so long as the closing control switch 79 is held closed. By opening the circuit 72 before the motor 20 has completed a breaker closing operation, no significant flux from the coil 77 is available to interfere with return motion of the armature 75 at the end of the breaker-closing operation.

The armature 75 is held in its upper position until the circuit-breaker-closing operation can be completed by means of a permanent magnet 81 provided above the armature 75. This permanent magnet 81 has insufficient strength to lift the armature 75 from its lower position but is sufficiently strong to hold the armature in its elevated position once moved into such position. At the end of the circuit-breaker-closing stroke, the normally open switch 82 is closed by suitable means sensitive to the position of the breaker. Closing of this normally-open switch 82 completes a pilot valve closing circuit 74. This circuit 74 contains a flux-neutralizing winding 84 capable when energized of quickly neutralizing the holding flux of the permanent magnet 81. Thus, when the breaker 10 reaches closed position, the switch 82 is closed to complete the circuit 74 to cause the winding 84 to effect release of the armature 75 from the permanent magnet 81, thereby allowing a small spring 86 to return the pilot valve to its closed position.

When the pilot valve member 60 returns to its closed position, it blocks the inlet port 56 and opens the dump port 58 thereby relieving the pressure in the space 52 beneath the actuating piston 50. This allows the pressurized liquid acting against the upper surface of the piston 42 of the main controlling valve to return the valve member 38 from the position of Fig. 2 to its position of Fig. 1. As soon as the main valve member 38 begins leaving the dump port 36, it begins relieving the pressure in the cylinder of the fluid motor 20. When the valve member 38 reaches its position of Fig. 1, it blocks the inlet port 34 and thus blocks the further flow of pressurized liquid through this port 34.

If a circuit breaker is closed on a faulted power line, it must be capable of reopening within a very short time after its contacts first touch. A typical requirement is that no more than one thirtieth of a second elapse between the time the contacts first touch and the time they part upon reopening. To meet this requirement in the usual fluid-operated circuit breaker, it is necessary that the pressure on the operating piston be relieved within an extremely short time after the breaker contacts first touch.

To achieve this high-speed relief of piston pressure in a circuit breaker operated by pressurized gas, as compared to liquid, large and expensive dump valves apart from the main control valve and directly connected to the fluid motor have been required. This is due, at least partially, to the fact that the compressibility of a gas renders its rate of response to a pressure signal much slower than that of a liquid, which is substantially incompressible. By using a pressurized liquid instead of a gas as the circuit breaker operating fluid, it has been possible to achieve the required high speed pressure relief without such separate dump valves. But to offset the advantages gained from dispensing with such dump valves, most prior hydraulically operated arrangements of which we are aware have required complicated main control valves or main control valves requiring complicated pilot controls, such as one pilot valve for opening and a separate pilot valve for closing the main valve.

In our operating mechanism, we have been able to attain the required high speed opening times following closure on a faulted line with a simple one part control valve member 38 and with only a single one part pilot valve member 60, as contrasted to the much more complex prior arrangements mentioned hereinabove. It is to be further noted that we have been able to attain this high speed operation with a simple valve arrangement of the poppet type, rather than the sliding type. This is advantageous because a poppet-type valve arrangement, such as our arrangement 38, 35, has less tendency to leak and less tendency to have its operation impaired by foreign matter than a sliding-type valve arrangement. The features that enable us to attain these high speeds with these simple poppet-type valve components will be pointed out in more detail in the following description of a breaker-closing operation on a faulted power line.

Such an operation would be initiated by closing the control switch 79 to cause the solenoid 70 to lift the pilot valve member 60. Such upward movement of the pilot valve member 60 would permit liquid to flow at high speed from the accumulator 30 through the line 55 and the pilot valve inlet port 56 into the chamber 52 beneath the actuating piston 50 of the main control valve. This pressurized liquid in the chamber 52 would force the piston 50 upwardly, and the piston 50, in so moving, would drive the main valve member 38 from the position of Fig. 1 to that of Fig. 2. Pressurized liquid would then flow from the accumulator 30 into the cylinder of the fluid motor through the inlet port 34. This liquid would quickly force the motor piston 22 downwardly against a reset spring 87, thereby effectively driving the contacts into the closed position of Fig. 2.

If it be assumed that a fault were present on the power line 16 at the time the breaker contacts touched, heavy current would immediately flow through the circuit 16, energizing a conventional overcurrent relay 90 through a current transformer 91. The relay would respond to such energization by closing its normally open contacts 92, thereby completing a tripping circuit for a conventional tripping solenoid 94. This tripping solenoid 94 would respond by forcing the latch 28 counterclockwise about its pivot 29*a* thereby allowing the breaker to be opened by the opening spring 17 without further restraint from the latch 28.

At the same time that latch-tripping occurs, the control switch 82 is closed, releasing the armature 74 of the pilot valve solenoid, and allowing the spring 86 to reclose the pilot valve. In reclosing, the pilot valve member 60 relieves the pressure in the actuating chamber 52 through the pilot valve dump port 58, thereby allowing the main valve member 38 to return to its position of Fig. 1 under the influence of the pressurized liquid acting on the upper face of valve controlling piston 42. Movement of the valve member out of its position of Fig. 2 can be initiated and can take place at an extremely high speed because the amount of liquid required to be vented from the chamber 52 is exceptionally small, as has been described hereinabove. High speed movement of the valve member out of its position of Fig. 2 effects high speed relief of the pressure above the main piston 22, thus allowing the reset spring 87 beneath the piston 22 and the main opening spring 17 to drive the piston upwardly without significant restraint from the liquid above the piston 22.

An additional factor contributing to the high speed at which pressure is relieved above the piston 22 is the fact that as soon as the valve member 38 begins moving toward its closed position, it begins opening the dump port 36 and thus relieving pressure in the motor 20. It is unnecessary to delay such relief until closing of any inlet port, such as 34 has occurred.

In the absence of any significant restraint from liquid above the piston 22 and from the trip latch 28, the breaker can quickly reopen to interrupt the current flowing through the contacts 12, 14. In a hydraulically-operated circuit breaker constructed generally as shown, times between contact-make and contact-part well within the 1/30 second requirement have consistently been achieved.

If the high speed closing action of our valve means 38 were allowed to continue without moderation, it would tend to result in damage to the valve seat 35 through impact engagement between the poppet valve member 38 and the valve seat. To prevent such damage, we provide a dashpot 100 beneath the actuating piston 50. This dashpot 100 comprises a piston 101 slidably received in a dashpot chamber 102 and normally biased into its position of Fig. 1 by a suitable compression spring 103. The dashpot chamber 102 communicates with the downstream side of the pilot valve member 60 through a supply line 104. This supply line 104 contains a check valve 105 of conventional design that allows liquid to flow through the line 104 only in a direction into the dashpot chamber 102. When the pilot valve member 60 is operated to open position to cause opening of the main valve, pressurized liquid flows to the bottom of the dashpot piston 101 via the line 104. This liquid acting on the bottom of the dashpot piston 101 aids the main actuating piston 50 in initiating opening movement of the main valve member 38. After this initial movement has taken place, however, further movement of the dashpot piston 101 is blocked due to the piston's engaging the top wall of the dashpot cylinder 102. Thereafter, further movement of the main valve member 38 into its fully-open position takes place independently of the dashpot piston as will be apparent from Fig. 2. While the main valve is open, the dashpot piston 101 is held against the top wall of the dashpot cylinder 102 by the pressurized liquid therebeneath. When the pilot valve member 60 is returned to closed position to effect closing of the main valve member 38, pressurized liquid remains beneath the dashpot piston due to the check valve 105, which blocks escape of such liquid from the chamber 102. The dashpot piston therefore remains in its uppermost position until engaged by the downwardly-moving actuating piston 50 near the end of a closing stroke for the main valve. This engagement occurs just prior to the point at which the valve member 38 engages the seat 35. The dashpot piston yields in a downward direction in response to engagement by the actuating piston 50 and retards the downward movement of the main valve member sufficiently to insure against impact damage to the valve seat 34. The extent of the retarding action is governed by a metering passage 106 extending through the dashpot piston and allowing liquid to be forced from the lower to the upper side of the dashpot piston 101 as the piston moves down. The size of the passage 106 controls the rate at which such flow occurs, and this rate in turn governs the rate at which the dashpot piston 101 and, hence, the main valve member 38 are moving at the instant the main valve contacts its valve seat 34. During this metering action, the check valve 105 remains closed preventing the metering passage 106 from being shunted by any flow through passage 104.

From the above description, it will be apparent that the dashpot 100 does not interfere with initial closing movement of the main valve member. This initial movement opened the dump port 34 to relieve pressure in the motor 20 at the desired high rate without any impedance from the dashpot 100. Only at the end of the valve-closing stroke did the dashpot retard movement of the main valve member 38, and by this time a substantial amount of pressure relief in the motor had already occurred.

Circuit-breaker-opening speeds attained with the mechanism disclosed hereinabove have consistently been well within the two cycle requirement explained above. But should even shorter times be desirable or required, these can be attained by slight modification of the valve means involving simply changing the angle at which the passage 32*a* from the accumulator enters the valve chamber 40, for example, in the manner illustrated in Fig. 4. If this angle is such that liquid through the passage enters the chamber 40 in roughly the same direction as the valve member moves during closing while leaving in a direction generally opposite to the direction of valve member movement, the momentum imparted to the valve member 38 as a result of this greater change in direction of flow will contribute materially to the valve-closing speed of the main valve member 38. This momentum component of force acts in a downward direction to supplement the pressure forces acting on the upper face of the valve piston 42, thus accelerating downward closing movement of the piston 42.

It is to be noted that the valve means 32 shown in the drawings contains a spring 110 urging the main valve member 38 into its closed position of Fig. 1. This is a light spring which is intended to assure that the valve is correctly positioned when the system is initially filled with pressurized liquid. The hereinabove described operation of the valve member 38 is not materially affected by this light spring 110 once the system is pressurized.

Although the illustrated embodiment of our invention includes a linkage (23) of the type that is not mechanically-trip-free, it is to be understood that the invention is equally applicable to those mechanisms which include suitable mechanically trip-free linkages. The disclosed mechanism is considered to be hydraulically trip-free inasmuch as the hydraulic pressure acting on the closing piston 22 is released immediately upon completion of breaker closing so as to permit immediate breaker-opening if necessary.

In the disclosed hydraulic system, O-rings or other suitable seals are provided about the peripheries of the various pistons and other sliding parts wherever it is desired to preclude leakage. These O-rings have been omitted from the drawings for the sake of simplicity. Because the valve members themselves are of the poppet type, rather than the sliding type, they do not require any such O-rings for sealing, and thus there is no problem of O-rings being cut by sliding across a valve port. The O-rings on the pistons are not subject to such cutting action since they slide within smooth surfaces.

While we have shown and described particular embodiments of our invention, it will be obvious to those skilled in the art that various changes and modifications may be made without departing from our invention in its broader aspects and we, therefore, intend in the appended claims to cover all such changes and modifications as fall within the true spirit and scope of our invention.

What we claim as new and desire to secure by Letters Patent of the United States is:

1. In a hydraulically-controlled operating mechanism for an electric circuit breaker, a fluid motor comprising a movable piston adapted to close said circuit breaker when moved from a first to a second position, an accumulator for supplying pressurized operating liquid to said motor, valve means for controlling the flow of pressurized operating liquid from said accumulator to said motor, said valve means comprising an inlet port interconnecting said accumulator and said motor, a dump port interconnecting said motor and a low pressure region, and a valve member movable between a closed position in which it seals off said inlet port and an open position in which it seals off said dump port, said dump port be-

ing open when said valve member is in its closed position and said inlet port being open when said valve member is in its open position, a chamber on the accumulator side of said valve member which is normally filled with pressurized liquid acting on the valve member in a valve-opening direction, a first piston fixed to said valve member and having a working area upon which pressurized liquid in said chamber acts in a direction to hold said valve member closed, said working area being greater than the effective area of said valve member that is exposed to valve-opening pressure from the liquid in said chamber whereby the pressure of the liquid in said chamber provides a net force acting in a direction to hold said valve member closed, an actuating piston coupled to said valve member and having a valve-actuating surface against which pressurized liquid can act to overcome said net force and drive said valve member out of its closed position, pilot valve means for admitting pressurized liquid to said valve-actuating surface to cause said valve member to open said inlet port and close said dump port thereby causing pressurized liquid to flow into said motor and drive said piston from said first to said second position, means responsive to movement of said motor piston into said second position for suddenly relieving the pressure on said valve-actuating surface to permit pressure on said first piston to return said valve member to closed position, said valve member in returning to closed position opening said dump port prior to reaching closed position.

2. The operating mechanism of claim 1 in which a valve seat surrounds said inlet port and in which said valve member is a poppet-type valve member that abuts against said valve seat in sealing off said inlet port.

3. The operating mechanism of claim 1 in combination with a dashpot for retarding valve closing motion of said valve member during final valve-closing motion, said dashport comprising a piston that is uncoupled from said valve member during initial valve-closing motion, force-transmitting means for coupling said piston and said valve member together during final valve closing, and means for imparting retarding forces to said valve member through said dashpot piston while said valve member and said dashpot piston are coupled together.

4. The operating mechanism of claim 1 in combination with dashpot means for controlling the speed of valve-closing motion, means for rendering said dashpot means inoperative to retard initial valve-closing motion and for rendering said dashpot means operative during the final portion of said valve-closing motion to retard said final portion of valve-closing motion.

5. The operating mechanism of claim 1 in combination with a dashpot for retarding valve-closing motion of said valve member during final valve-closing motion, said dashport comprising a piston having a normal position, means for admitting pressurized liquid to said dashpot piston substantially simultaneously with the admission of pressurized liquid to said actuating piston to drive said dashpot piston out of said normal position, means for transmitting motion of said dashpot piston out of said normal position to said valve member to assist said actuating piston in producing valve-opening, means for blocking further valve opening motion of said dashpot piston after initial valve-opening and for allowing further valve-opening to occur independently of said dashpot piston, means for coupling said valve member to said dashpot piston during final valve-closing motion to cause forces transmitted through said valve member to return said dashpot piston to its normal position, and means for retarding return of said dashpot piston to its normal position.

6. The operating mechanism of claim 1 in which said pilot valve means comprises an inlet port affording communication between said accumulator and said valve-actuating surface, a dump port affording communication between said valve actuating surface and a low pressure region, a movable pilot valve member having a closed position in which it seals off said inlet port and opens said dump port and an open position in which it seals off said dump port and opens said inlet port, and means for initiating a circuit breaker closing operation by driving said pilot valve into said open position; and in which the means for relieving pressure on said valve-actuating surface comprises means for returning said pilot valve member to its closed position.

7. The operating mechanism of claim 1 in which said valve means is so constructed that pressurized liquid flows into said chamber upon initial closing motion of said valve member in generally the same direction as the valve member moves during closing and leaves said chamber in a direction generally opposite to the direction of valve-closing movement.

**References Cited** in the file of this patent

UNITED STATES PATENTS

| | | |
|---|---|---|
| 2,740,859 | Beatty et al. | Apr. 3, 1956 |
| 2,861,144 | Favre | Nov. 18, 1958 |