July 1, 1930. P. GWISDALLA 1,769,133

THERMOSTATIC REGULATOR FOR INTERNAL COMBUSTION ENGINES

Filed June 5, 1929 2 Sheets-Sheet 1

Fig. 1.

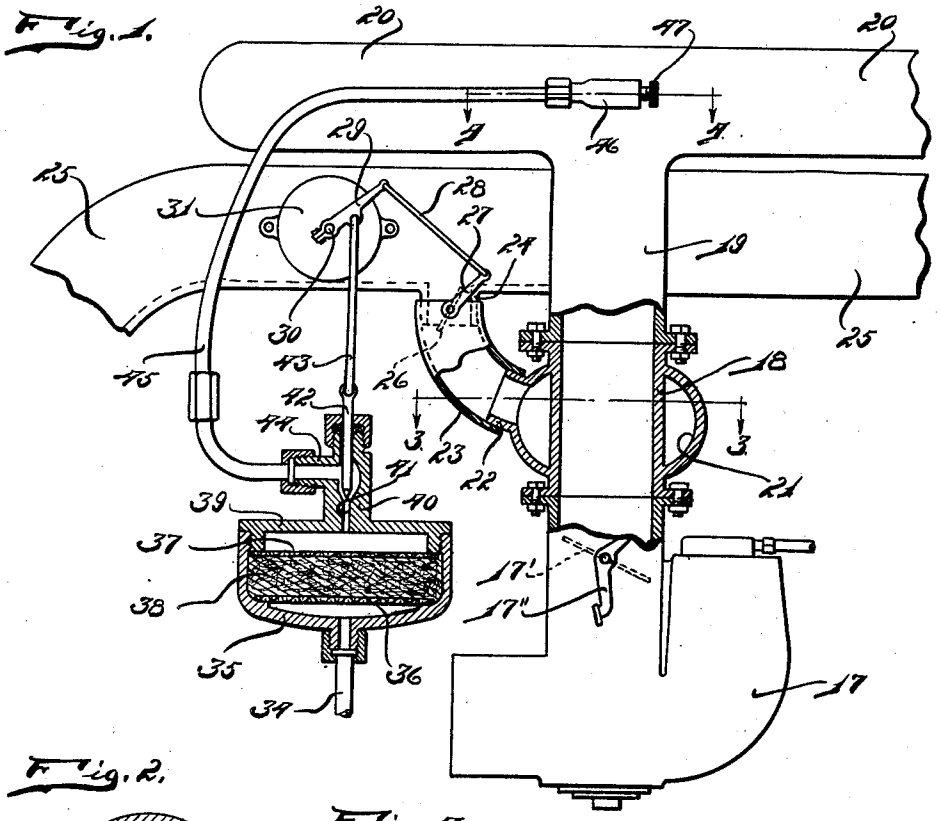

Fig. 2.

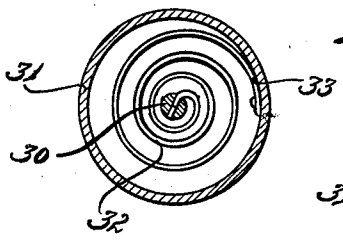

Fig. 4.

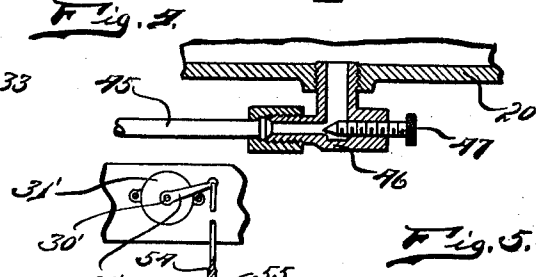

Fig. 5.

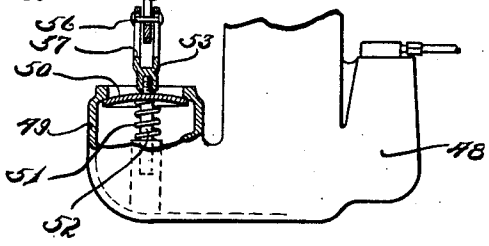

Fig. 3.

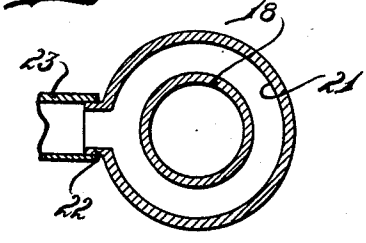

INVENTOR
Peter Gwisdalla
BY
Thos. F. Donnelly
ATTORNEY

July 1, 1930. P. GWISDALLA 1,769,133

THERMOSTATIC REGULATOR FOR INTERNAL COMBUSTION ENGINES

Filed June 5, 1929 2 Sheets-Sheet 2

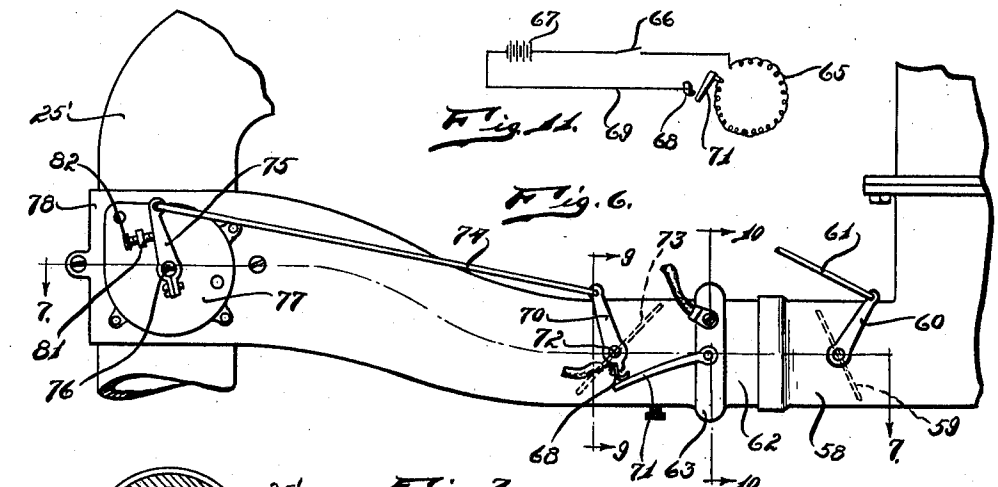

Fig. 11.

Fig. 6.

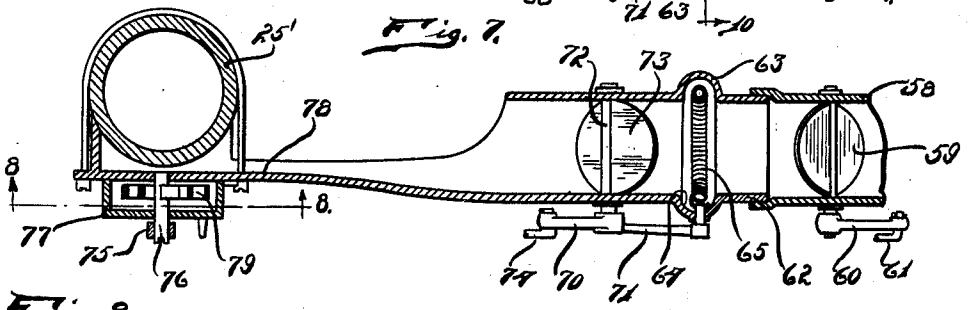

Fig. 7.

Fig. 8.

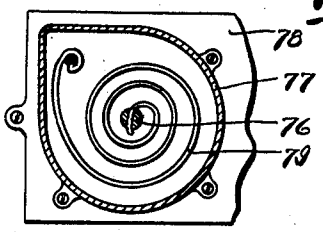

Fig. 9.

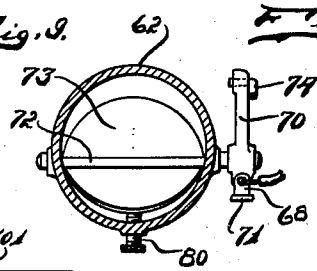

Fig. 10.

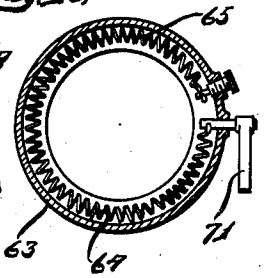

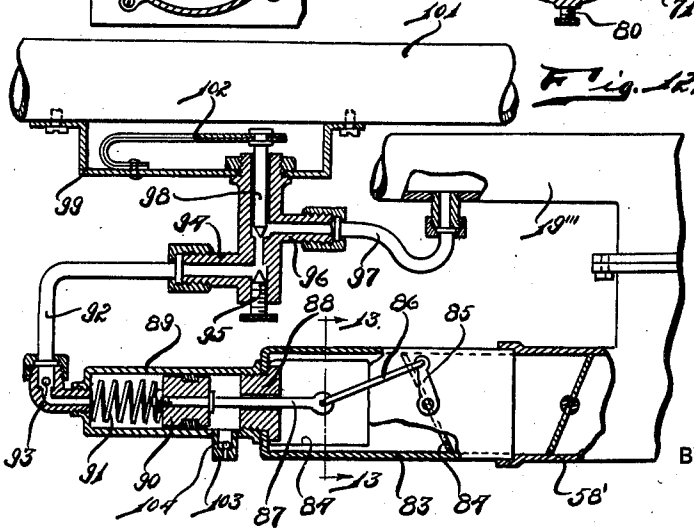

Fig. 12.

Fig. 13.

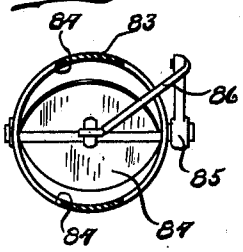

INVENTOR
Peter Gwisdalla
BY Thos. L. Connell
ATTORNEY

Patented July 1, 1930 1,769,133

UNITED STATES PATENT OFFICE

PETER GWISDALLA, OF DETROIT, MICHIGAN

THERMOSTATIC REGULATOR FOR INTERNAL-COMBUSTION ENGINES

Application filed June 5, 1929. Serial No. 368,709.

My invention relates to a new and useful improvement in a thermostatic regulator for internal combustion engines and has for its object the provision of thermostatically controlled means for regulating the temperature of the fuel mixture which is delivered to the intake manifold.

Another object of the invention is the provision of a device of this class whereby the temperature of the fuel delivered to the intake manifold may be regulated and a quantity of lubricating oil delivered to the intake manifold until a predetermined temperature has been reached.

Another object of the invention is the provision of a device of this kind which will be simple of structure, economical of manufacture and highly efficient in use.

Other objects will appear hereinafter.

The invention consists in the combination and arrangement of parts hereinafter described and claimed.

The invention will be best understood by a reference to the accompanying drawings which form a part of this specification and in which,

Fig. 1 is a central vertical sectional view of the invention showing it applied to an engine.

Fig. 2 is a sectional view through the thermostat housing.

Fig. 3 is a sectional view taken on line 3—3 of Fig. 1.

Fig. 4 is a fragmentary sectional view taken on line 4—4 of Fig. 1.

Fig. 5 is a fragmentary side elevational view with parts broken away and parts shown in section of a slightly modified form.

Fig. 6 is a side elevational view of a modified form of the invention showing it applied.

Fig. 7 is a fragmentary view taken on line 7—7 of Fig. 6.

Fig. 8 is a view taken on line 8—8 of Fig. 7.

Fig. 9 is a view taken on line 9—9 of Fig. 6.

Fig. 10 is a view taken on line 10—10 of Fig. 6.

Fig. 11 is a diagrammatic view of the wiring used in the modified form.

Fig. 12 is a central vertical sectional view of a further modified form of the invention showing it applied.

Fig. 13 is a sectional view taken on line 13—13 of Fig. 12.

I have illustrated in the drawings the invention adapted for use with an internal combustion engine having a carburetor 17 controlled by the throttle valve 17′, operated by the lever 17″. Interposed between the carburetor 17 and the intake manifold 19 is a conduit 18, the manifold 19 having the laterally extending branches 20. A heat chamber 21 is formed on the conduit 18 and provided with an outwardly projecting nipple 22 which connects with the conduit 23 which is mounted on the nipple 24 formed on the exhaust pipe 25 so that the exhaust gases may be caused to circulate in the heat chamber 21. The butterfly valve 26 is operated by the arm 27 to control the flow of the exhaust gases into the heat chamber 21. The arm 27 is connected by the rod 28 to the arm 29 which is fixedly mounted on the shaft 30 so as to rock therewith. This shaft extends into the housing 31 and secured to the shaft is one end of a thermostat coil 32, the other end 33 of which is attached to the housing 31, this housing being mounted on the exhaust manifold 25. Connecting to a suitable source of oil supply is a pipe 34 which is secured in communication with the housing 35 in which is positioned a filter comprising the layers 36 and 37 which may be formed of felt or other suitable material and between which is positioned the layer 38 of filtering material such as mineral wool, etc. The cover 39 of the housing 35 is provided with a neck 40 having the passage 41 formed therein and controlled by the needle valve 42 which is connected by the rod 43 to the arm 29. A laterally projecting nipple 44 communicates with the interior of the neck 40 and through the pipe 45 and the fitting 46 with the interior of the intake manifold 20. A needle valve 47 is positioned in the fitting to regulate the communication of the intake manifold with the pipe or tube 45.

In operation, when the engine is started from a cold condition, the thermostatic coil 32 will so have contracted as to have rocked

the arm 27 and move the valve 26 to open position. Similarly the needle valve 42 will be raised from its seat so that as the engine is started, a suction will be set up to draw into the intake manifold a quantity of lubricating oil through the tube or pipe 45, thus serving to effectively lubricate the engine pistons and prevent binding of the pistons in the cylinder. At the same time the exhaust gases will be directed into the heat chamber 21 so that the fuel mixture passing through the conduit 18 may be heated. As the engine becomes heated, the thermostatic coil 32 will, through its expansion, serve to close the butterfly valve 26 so that thereafter the exhaust gases will be permitted to pass through the exhaust 25 without entering the heat chamber 21. At the same time, the needle valve 42 will be moved to its seat so as to close the passage 41 and prevent the further delivery of lubricant to the intake manifold 20 as the usual lubricating system of the engine will at that time be so functioning as to effect the necessary lubrication.

In Fig. 5 I have shown a slightly modified form of the invention in which the carburetor 48 is provided with the vertically extending pipe 49 closed by the valve 50 which is normally held in closed position by the spring 51. This spring embraces a stem 52 which extends through the closure 50 and is threaded into the clevice 53. A rod 54 serves to connect the arm 29′ which is fixedly mounted on a shaft 30′ projected through the housing 31, this shaft 31′ being rockable in the same manner as is the shaft 30. The rod 54 is provided with an elongated slot 55 through which projects a pin 56 projected through the slots 57 formed in the clevice. As the engine is heated, the arm 29′ will be rocked downwardly so as to move the closure 50 from its seat and permit the entry of a larger amount of air into the carburetor 48.

In the form shown in Figs. 6 and 7, I have provided a slightly modified form of the structure in which the fuel mixture may be heated and its heating thermostatically controlled. Secured to the air intake conduit 58 which is controlled by the choke valve 59 operated by the arm 60 and the rod 61 is a conduit 62 having a peripheral bulge 63 formed therein to provide an inner groove 64 in which is positioned an electric heating coil 65. This heating coil is connected as shown in the diagrammatic view through a switch 66 to one end of a battery 67. The opposite end of the battery 67 is connected to a contact 68 by means of the wire 69. This contact 68 is carried on the rockable arm 70 and adapted upon rocking of the arm 70 for engaging the arm 71 which is connected to the coil 65. The arm 70 is fixedly mounted on a shaft 72 upon which is mounted the butterfly control valve 73. A rod 74 connects the arm 70 to the arm 75 which is fixedly mounted on the shaft 76 which extends into the housing 77. This housing 77 is clamped to an extension 78 of the conduit 62 and this extension 78 is secured to the exhaust manifold 25′. The rocking of the arm 76 is effected in the same manner as the rocking of the arm 30, a thermostatic coil 79 being positioned within the housing 77. A set screw 80 is threaded into the conduit 62 for limiting the rocking or movement of the butterfly valve 73 in one direction beyond a predetermined distance. When the engine is cold, the thermostatic coil 79 will so rock the arm 70 so as to move the butterfly valve 73 into closed position and at the same time the contact 68 will have engaged the arm 71 so that the circuit through the heating coil 65 will be closed. When the engine is started, therefore, a rich mixture of fuel will be delivered to the engine because of the closing of the butterfly valve 73 and shutting off the flow of air to the carburetor. At the same time a heating of the air which is delivered to the carburetor will be effected. As the engine "warms up", the expansion of the thermostatic coil 79 will serve to rock the arm 70 so as to break the circuit to the heating coil 65 and at the same time the valve 73 will be rocked to open position. In this manner, there is provided a thermostatically controlled automatically operated device whereby the amount of air delivered to the carburetor may be regulated and the temperature of the fuel mixture controlled. A set screw 82 is threaded into a lug 81 on the housing 77 so as to limit the rocking movement of the arm 75 in one direction.

In the forms shown in Figs. 11 and 12, a conduit 83 having openings 84 formed adjacent one end for the admission of air is mounted on the air inlet conduit 58′ of the carburetor which communicates with the intake manifold 19‴. A butterfly valve 84 rockably mounted in the conduit 83 and operable by the arm 85 is connected by the rod 86 to a piston rod 87 which is projected through the plug 88 positioned in and projecting outwardly from the conduit 83 and to which is secured the cylinder 89. Slidably mounted in the cylinder 89 is a piston 90 normally held in position by the spring 91 in such a position as to maintain the butterfly valve 84 closed. The cylinder 89 is connected by the piping 92 through the ball valve 93 to the fitting 94 in which is positioned an adjustable needle valve 95. A lateral neck 96 on the fitting 94 connects by the pipe 97 with the intake manifold 19‴. A needle valve 98 projects into the fitting 94 and when in closed position serves to close communication between the pipe 97 and 92. A housing 99 is mounted on the exhaust manifold 101. Carrying the needle valve 98 and secured to and within the housing 99 is

a thermostatic plate 102 so arranged that when the temperature within the housing 99 reaches a predetermined temperature, the needle valve 98 will be moved to closed position and so arranged that when the engine is cold, the needle valve 98 will be held off its seat. A bleed port 103 is formed in the cylinder 89 and controlled by the ball valve 104.

In operation, when the engine is cold and the needle valve 98 held off its seat and the engine started, a suction through the pipes 97 and 92 will move the piston 90 against the compression of the spring 91 so as to move the valve 84 into closed position. When the engine has warmed up so that the thermostatic action moves the valve 98 into closed position, the cylinder 89 will be permitted to bleed through the bleed valve 105 and the piston 90 will be moved by the compression of the spring 91 to a position to open the valve 84. In this way the amount of air delivered to the carburetor is controlled in proportion to the temperature of the engine.

While I have illustrated and described the preferred form of my invention, I do not wish to limit myself to the precise details of structure shown but desire to avail myself of such variations and modifications as come within the scope of the appended claims.

Having thus described my invention, what I claim as new and desire to secure by Letters Patent is:

1. In an internal combustion engine having an intake manifold and an exhaust manifold: an oil conduit leading to said intake manifold; control means for controlling flow of fluid through said conduit; and thermostatic means for operating said control means.

2. In an internal combustion engine having an intake manifold and an exhaust manifold: an oil conduit communicating with said intake manifold for delivering oil thereto; a control valve for controlling flow of oil through said conduit; and thermostatic means mounted on said exhaust manifold for operating said control means.

3. In an internal combustion engine having an intake manifold and an exhaust manifold: a heating member for heating gases delivered to said intake manifold; control means for controlling said heating member; a conduit for delivering oil to said intake manifold; control means for controlling delivery of oil through said conduit; and thermostatic means for operating both of said control means.

4. In an internal combustion engine having an intake manifold and an exhaust manifold: a heating member for heating gases delivered to said intake manifold; control means for controlling said heating member; a conduit for delivering oil to said intake manifold; control means for controlling delivery of oil through said conduit; and thermostatic means for operating both of said control means simultaneously.

In testimony whereof I have signed the foregoing specification.

PETER GWISDALLA.