June 30, 1970 G. F. SHANAHAN 3,517,928

WEIGHTED SHOE

Filed July 25, 1969

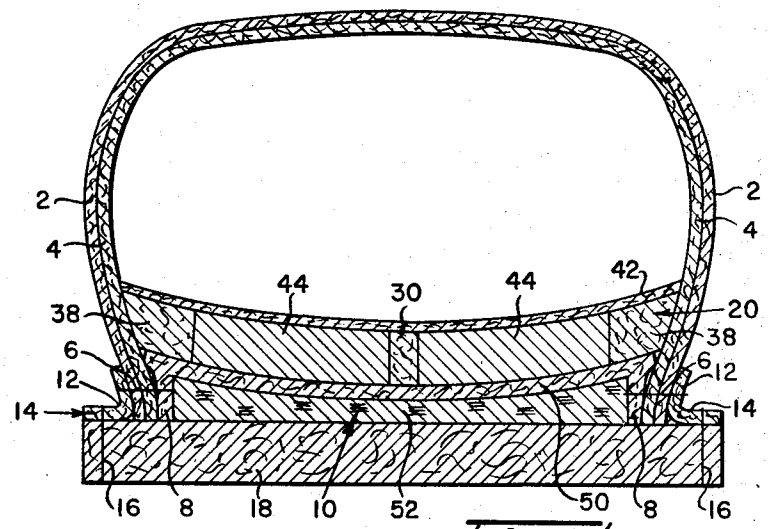

Fig. 1

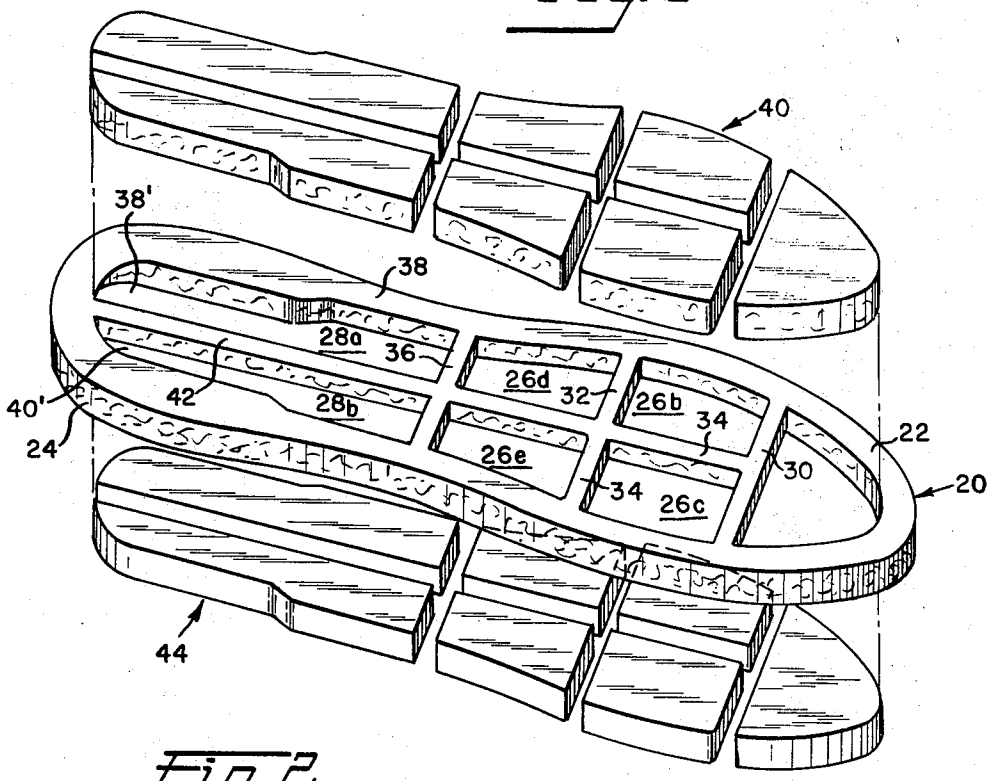

Fig. 2

INVENTOR
GERARD F. SHANAHAN

BY
Scrivener Parker Scrivener & Clarke
ATTORNEYS

United States Patent Office

3,517,928

Patented June 30, 1970

1

3,517,928

WEIGHTED SHOE

Gerard F. Shanahan, 11729 Devilwood Drive, Potomac, Md. 20854

Continuation-in-part of application Ser. No. 519,353, Jan. 7, 1966, which is a continuation-in-part of application, Ser. No. 320,037, Oct. 30, 1963. This application July 25, 1969, Ser. No. 844,951

Int. Cl. A63b *23/04*

U.S. Cl. 272—57 1 Claim

ABSTRACT OF THE DISCLOSURE

A shoe providing therapeutic advantages to the wearer, having a flat weight-receiving member inside the shoe and coextensive with the sole and having a plurality of vertical openings spaced over its area and being open to the interior of the shoe whereby they may selectively receive light-weight plugs or heavy weights. The openings are positioned on the opposite sides of the longitudinal center line of the weight receiving member so that certain medical and therapeutic effects may be produced by selective and relative positioning of the plugs and weights.

RELATION TO OTHER CASES

This application is a continuation-in-part of my copending application Ser. No. 519,353, filed Jan. 7, 1966, for Weighted Shoe, now abandoned, which was a continuation-in-part of my application Ser. No. 320,037, filed Oct. 30, 1963, for Therapeutic Shoes, now abandoned.

DESCRIPTION OF THE INVENTION

This invention relates broadly to footwear and, more particularly, to shoes and shoe parts having such structure, function and utility that the body of the wearer is physically benefitted by wearing the shoe, for example by strengthening the muscles of the legs and other parts of the body and by improvement or correction of physical defects.

It has heretofore been proposed, and is now broadly known, to provide shoes for human use which have weights associated with them. These weighted shoes have never been widely used or commercially available, and it is believed that this has been due to fundamental and important deficiencies in their basic concept and their structure. My invention has to do with such weighted shoes for human use, and departs fundamentally and radically from all known concepts and structures of such shoes to provide weighted shoes which have new and basically different structure and mode of operation and use, which have already won wide commercial and professional acceptance, and which have proved the beneficial results of their use in actual wear.

It has been the principal object of my invention which is achieved by the shoe structures and shoe parts disclosed herein, to provide a shoe having incorporated therein a part of parts which will add to the shoe either a fixed weight or a weight which may be varied as desired by the wearer, or as directed by a physician, thereby to adjust to any desired degree the weights carried in the two shoes normally worn, and to arrange them in a pattern providing a desired therapeutic result.

The invention is described in the following specification and is illustrated in the accompanying drawings, in which:

FIG. 1 is a transverse sectional view through a weighted shoe according to the invention, and

FIG. 2 is an exploded view showing the weight-receiving part of a weighted shoe according to the invention

2

and the leather plugs and weights associated with the weight-receiving member.

This invention contemplates the provision of a pair of substantially identical, left and right shoes to be worn by a human being, male or female, each of which shoes is provided with means adding substantial weight to the shoe, although for purposes of this specification and the appended claims only one shoe of a pair will be described. In a preferred embodiment of the invention the weight adding means is permanently built into the shoe but is so constructed and arranged that the total weight thereof may be varied as desired. This shoe comprises an upper **2** of conventional design which may be slightly larger in inside vertical dimension than a conventional shoe of the same size, for a reason which will become apparent. The interior of this upper member is provided with a leather lining member **4**, as shown in FIG. 2. The side walls of the upper and lining members are brought downwardly at each side of the shoe to form the shoe upper into conventional shape, and adjacent their free edge parts they are stitched, as at **6**, to the depending edge flange **8** of inner sole **10**, which is within the shoe and closes the upper at its lower part. This line of stitching also unites these parts to the upwardly extending part **12** of an exterior welt **14**, the lower part of which is stitched at **16** to the bottom sole **18**.

Within such space and permanently laminated to the upper surface of inner sole **10** there is provided in accordance with the invention a flat weight receiving member **20** which has the same shape and substantially the same size as the inner sole **10** and therefore substantially fills the area defined by the lower depending side wall parts of the upper member **2**. This member is formed of material such as leather, is preferably approximately one-half inch thick, and is shaped substantially as the sole of the human foot, having a forward part **22** and a heel part **24**. The forward part **22** is provided with five openings and the heel part **24** is provided with two openings **8**, all of which openings extend entirely vertically through the weight member. One of the openings, **26*a***, in the forward part is at the front of the weight-receiving member and extends across it and is substantially semi-circular in shape, while two of the other openings in the forward part, **26*b*** and **26*c***, are rearward of opening **26*a*** and are positioned side-by-side laterally of the weight member, and the remaining forward openings **26*d*** and **26*e*** are positioned side-by-side rearwardly of the openings **26*b*** and **26*c*** and are also positioned laterally of the weight member, and each of these four openings has its outer edges shaped to conform to the side edges of the forward part of the weight member. The openings in the forward part are defined and separated by a grid system formed of the material of the weight-receiving member remaining after the holes **26*a*** to **26*e*** are cut. Thus, the lateral rib **30** separates the front opening from the next rearward openings **26*b*** and **26*c*** and a lateral rib **32** separates openings **26*b*** and **26*c*** from the rear opening **26*d*** and **26*e***. The openings **26*b*** and **26*d*** lie on one side of a longitudinally extending partition **32** which extends along the longitudinal center line of the weight receiving member and intersects the lateral ribs **30**, **32** at right angles; and also intersects at right angles a third lateral rib **36** which separates the openings **26*d*** and **26*e*** from the heel openings.

The heel part **24** of the weight-receiving member has two laterally spaced, longitudinally extending openings **38**, **40** in it which are separated by a rib or partition **42** which is aligned with the forward longitudinal partition **34**.

The openings in the forward and heel parts of the shoe, being positioned on opposite sides of the longitudinal axis of the weight-receiving member, are therefore on opposite sides of the longitudinal axis of the foot itself. By reason

of this the weights may be positioned and arranged with respect to these axes in order to cause any desired forces to be exerted by the weights on one side or the other of the foot.

In accordance with the invention there are provided for each weight-receiving member **20** a plurality of plugs which are generally designated by numeral **40** in the drawings and which are preferably formed by cutting the member **20** to form therein the weight-receiving openings **26***a* to **26***e* and **40**, **42**. The leather (or other material) plugs **40** which are produced by cutting the weight-receiving member are permitted to remain within the respective openings when that member is assembled within the shoe, and when so assembled a removable sock liner **42**, consisting of a thin leather strip and usually a layer of spongy material, shaped to conform to the shape of the weight member **20**, is placed over the upper surface of the weight-receiving member and the plugs in the openings therein.

In further accordance with the invention there are provided for each weight-receiving member a plurality of weights **44** which may be made of lead or any other heavy metal or other material. Each of these weights is shaped to conform to the size and shape of one of the openings **26***a* to **26***e* and **40**, **42** in the weight-receiving member and has the same thickness as that member, and therefore in the embodiment of the invention which is being described and illustrated seven weights will be provided and will be of the same size and shape as the openings **26***a* to **26***e* and **40**, **42** respectively.

At any time, either before or after the weight member is built into the shoe, each of the leather plugs which normally fill the openings in the weight member may be removed and replaced by that one of the heavy weight members which corresponds in size and shape to the removed plug. This removal of plugs and replacement with weights is accomplished through the open interior of the shoe after partially or entirely removing the sock liner **42** which covers the weight member and the plugs or weights therein. It will be apparent that by a proper combination of retained leather plugs and heavy weights the distribution of weight over the entire area of the shoe may be adjusted and varied as desired. Thus, a beginner who wishes only to strengthen his leg and other muscles may leave in all of the leather plugs except one and replace only that one with a heavy weight. As he grows more used to the weighted shoe he may replace a progressively increasing number of leather plugs with weights until all of the leather plugs have been so replaced, at which time he will be carrying maximum weight in each shoe.

The weight-receiving member **20** will normally be permanently connected to the (insole) **10** by being united thereto in any suitable way, and its upper surface will be perfectly uniform regardless of whether the openings therein are filled by the leather plugs or by the weight members, as in all embodiments of the invention the upper surface of the weight-receiving member, formed as it is by the peripheral wall and transverse and longitudinal partitions which define the openings, is at a uniform level with the upper surfaces of the leather plugs and weight members within the holes. Therefore, either with or without the sock liner which covers the upper surface of the weight member, complete comfort will be provided to the bottom of the foot.

In an important manner of use of weighted shoes having a weight-receiving member constructed in accordance with the invention, the weights in the forward and heel parts of the two shoes may be selectively positioned and adjusted by direction of a physician to produce desired

results in the treatment of various physical disorders. Thus, use of both heel weights gives a considerable amount of weight in the heel of the shoe, thus increasing the strength of the largest muscle group in the calf of the leg, namely the gastrocnemius and the soleus group. If desired, strength can be given to the posterior tibial tendon and muscle together with the gastroc and soleus by using only the weight for opening **38** in the heel portion of the shoe. The openings in the forward part of the weight-receiving member are also arranged in order to permit specific results to be accomplished by proper disposition and arrangement of the weights in that part of the shoe. Thus, if all of the compartments to **26***a* to **26***e*, inclusive, are filled with weights this will give a maximum amount of weight in the forefoot which will strengthen all the tibial and the peroneal muscle groups. If desired, the toe extensors such as the hallucis longus and the other toe extensors could be worked on only by using primarily, or solely a weight in opening **26***a*. Also, weights in openings **26***e* and **26***c* could be used solely in order to strengthen the anterior tibial muscle. If this muscle is extremely weak to start with **26***e* alone would be used and then increased to **26***c*. Weights in openings **26***b* and **26***d* can be used solely to exercise the peroneal muscle groups. If these are too weak to support and to lift both weights then one alone can be used. If all weights are used in their positions further strengthening of the quadriceps and hamstring muscles will take place, together with the back and abdominal muscles.

I claim:

1. A shoe for use by human beings to produce, when worn, selectively determinable therapeutic results beneficial to the body, said shoe comprising an upper and a sole assembly, said sole assembly comprising a weight-receiving member of generally flat configuration and being substantially co-extensive with the sole assembly said weight-receiving member having a front part to underlie the ball part of the foot and a rear part to underlie the heel part of the foot, the front part having a plurality of vertical openings therein which open at the upper surface of the weight-receiving member into the interior space of the shoe some of which are disposed on opposite sides of the longitudinal center line of the weight-receiving member and of the shoe, the heel part of the weight-receiving member having two vertical openings therein which open at the upper surface of the weight-receiving member into the interior space of the shoe and are disposed at opposite sides of the longitudinal center line of the weight receiving member and of the shoe, a plurality of light-weight plugs which are respectively shaped to fit removably within the openings in the weight-receiving member, and a plurality of weights which are respectively shaped to fit removably within the openings in the weight-receiving member.

References Cited

UNITED STATES PATENTS

1,637,565	8/1927	Gordon	272—57
1,741,419	12/1929	Jones	128—586
2,424,159	7/1947	Goetz.	

FOREIGN PATENTS

18,208	10/1899	Great Britain.

RICHARD C. PINKHAM, Primary Examiner

R. W. DIAZ, Assistant Examiner

U.S. Cl. X.R.

36—2.5