United States Patent [19]

Hastings

[11] **3,863,567**

[45] **Feb. 4, 1975**

[54] **MULTILINE OFFSET PRINTING MACHINE**

[75] Inventor: **Dana B. Hastings,** Natick, Mass.

[73] Assignee: **Dennison Manufacturing Company,** Framingham, Mass.

[22] Filed: **Apr. 25, 1973**

[21] Appl. No.: **354,316**

[52] **U.S. Cl.**..... **101/252,** 101/187, 101/228, 101/270, 101/354

[51] **Int. Cl.**..... **B41f 3/00**

[58] **Field of Search**..... 101/177, 228, 186–192, 101/250–253, 255, 256, 259, 260, 264, 263, 268, 269, 270, 271, 272, 273, 354, ; 226/67, 68, 70, 71; 83/404, 240, 241, 242, 243

[56] **References Cited**

UNITED STATES PATENTS

632,766	9/1899	Stone	101/270
838,340	12/1906	Leroy	226/68
1,146,672	7/1915	Trier	101/186
1,499,997	7/1924	Ormond	101/252
1,499,998	7/1924	Ormond	101/187
1,814,254	7/1931	Levison	101/383
1,843,255	2/1932	Vandercock et al.	107/354
1,947,205	2/1934	Jaeger	83/240
1,999,776	4/1935	Nelson	101/383
2,274,595	2/1942	Edwards	101/110
2,502,806	4/1950	Staude	101/252
2,779,590	1/1957	Steastrom	226/65
2,996,001	8/1961	Schlegel et al.	101/227
3,122,995	3/1964	Adler et al.	101/66
3,167,007	1/1965	Klauss	101/184
3,279,369	10/1966	Wight	101/110
3,331,315	7/1967	Henry	101/228 X
3,415,182	12/1968	White	101/68
3,415,183	12/1968	Dudley	101/68

OTHER PUBLICATIONS

Gnage, Def. Pub. of Serial No. 882,642, published in 875 O.G. 362, on 6-16-70, Defensive Pub. No. T875,018.

Primary Examiner—J. Reed Fisher

Attorney, Agent, or Firm—Dike, Bronstein, Roberts, Cushman & Pfund

[57] **ABSTRACT**

Printing apparatus comprising a print station, two or more indicia stations and an ink station arranged along a predetermined path, a feed finger for delivering successive lengths of a ticket strip to the print station and ink and print rolls movable along said path. The ink roll is caused to take ink from the ink pad at the ink station and apply it to the indicia at each of the indicia stations and to be withdrawn from ink transferring relation with the ticket strip at the print station and the print roll is caused to take ink prints from the indicia at each of the indicia stations, apply the composite of the indicia to the ticket strip at the print station and to be withheld from the ink pad at the ink station. Conveyors continuously transverse the ink and print rolls relative to the stations and cams arranged along said path withdraw the ink roll and print roll respectively from the print station and ink station. There is a cutter operable in timed relation with the feed finger to cut the successive ticket lengths following printing.

21 Claims, 8 Drawing Figures

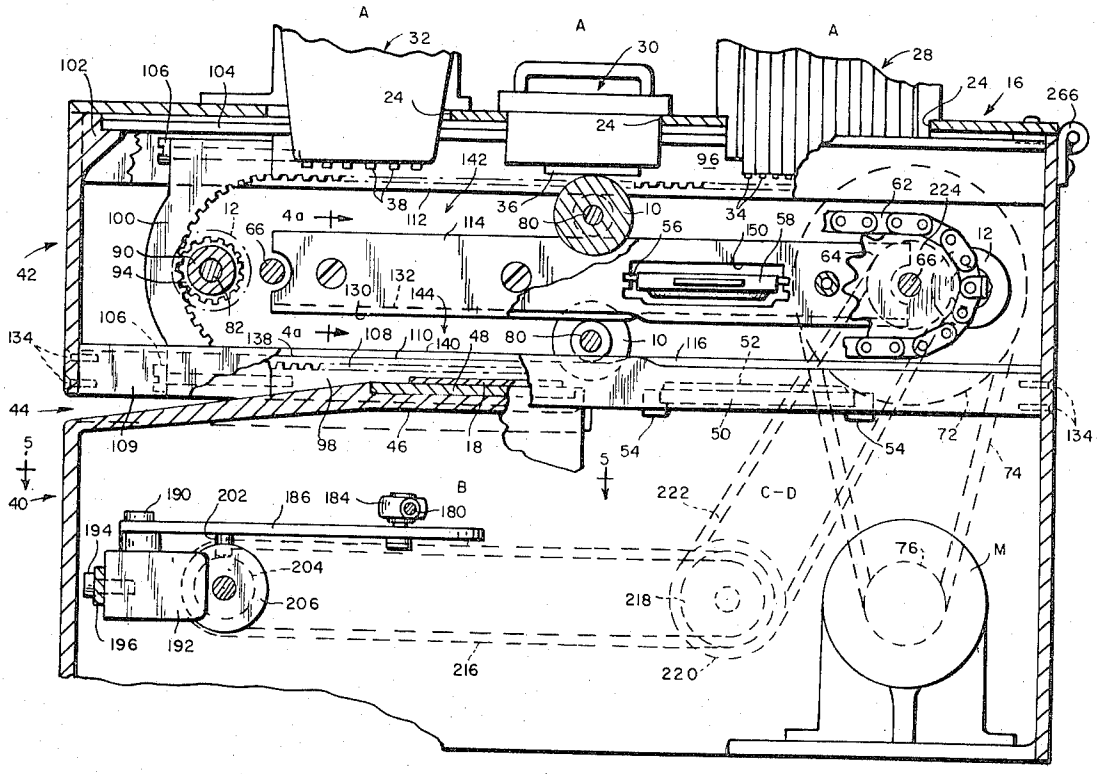

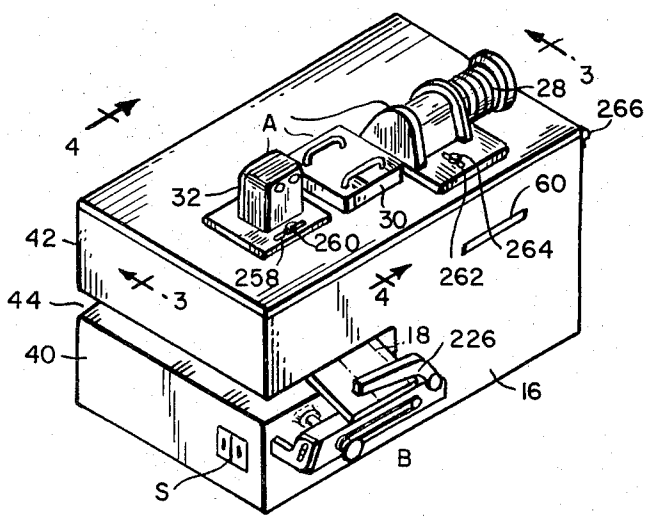

FIG. 1

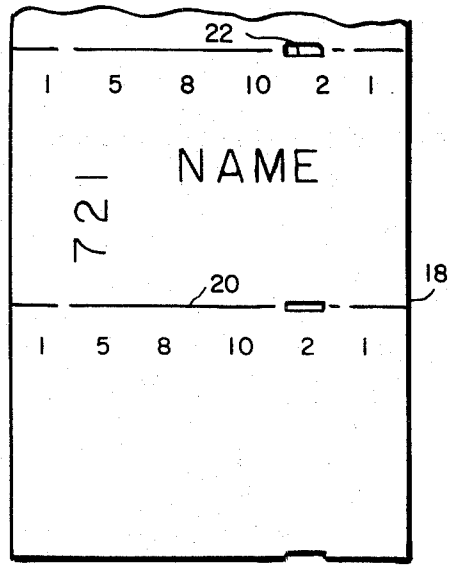

FIG. 2

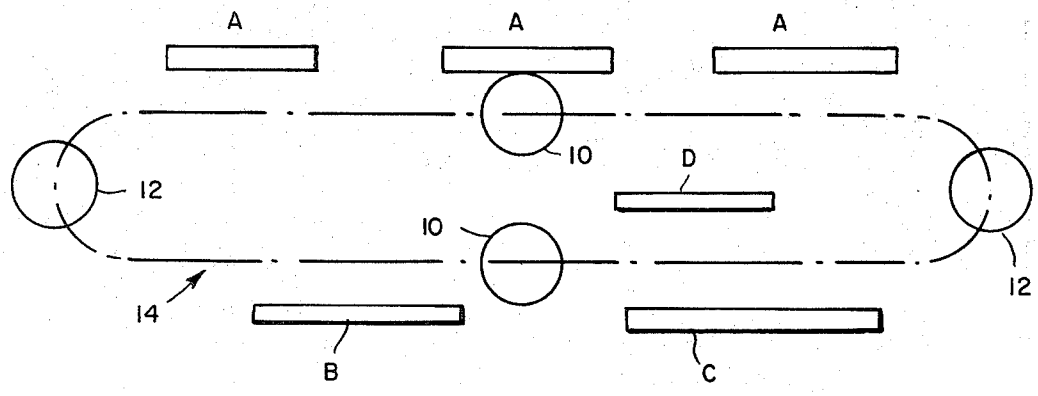

FIG. 2a

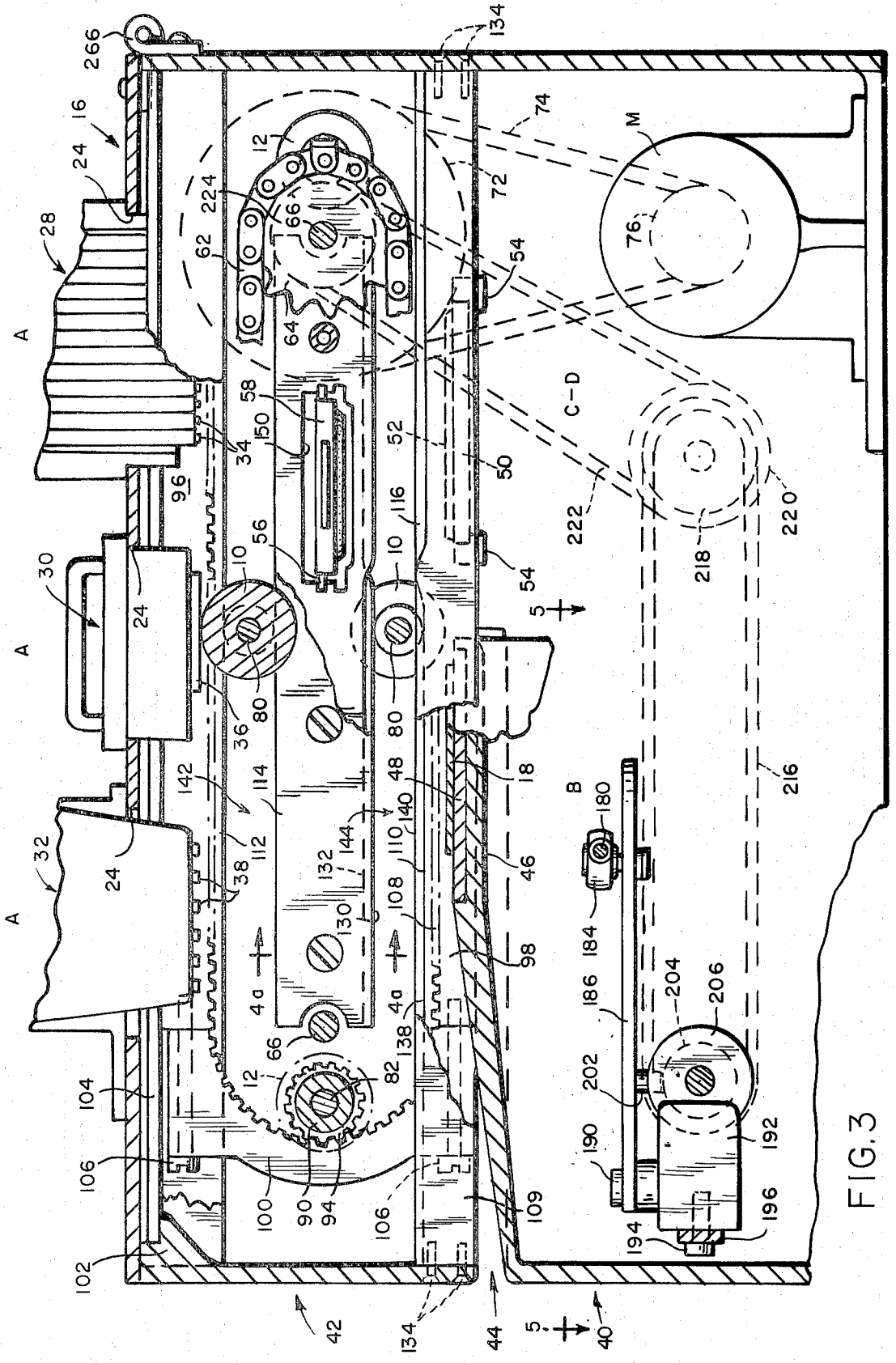
266
16
24
28
A
30
32
34
36
38
10
12
56
58
150
62
64
66
224
74
72
54
M
76
C-D
50
52
116
222
218
220
216
5
80
142
114
112
144
140
110
132
130
108
48
18
46
98
4a
138
82
90
94
100
106
104
102
42
134
44
40
B
180
184
186
204
206
202
190
192
194
196

FIG. 3

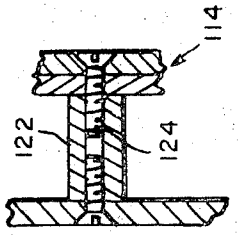
114
122
124

FIG. 4a

A
10
12
16
18
24
30
36
40
42
44
46
48
62
64
66
68
72
74
76
80
82
84
86
88
90
93
94
96
98
102
104
105
108
110
112
114
116
118
120
126
128
130
132
136
138
140
142
144
146
148
152
154
156
158
160
162
166
168
170
172
174
176
178
180
182
184
186
194
196
198
200
202
204
206
208
210
212
214
216
220
222
224
226
244
246
252
254
256
S1
M

FIG. 4

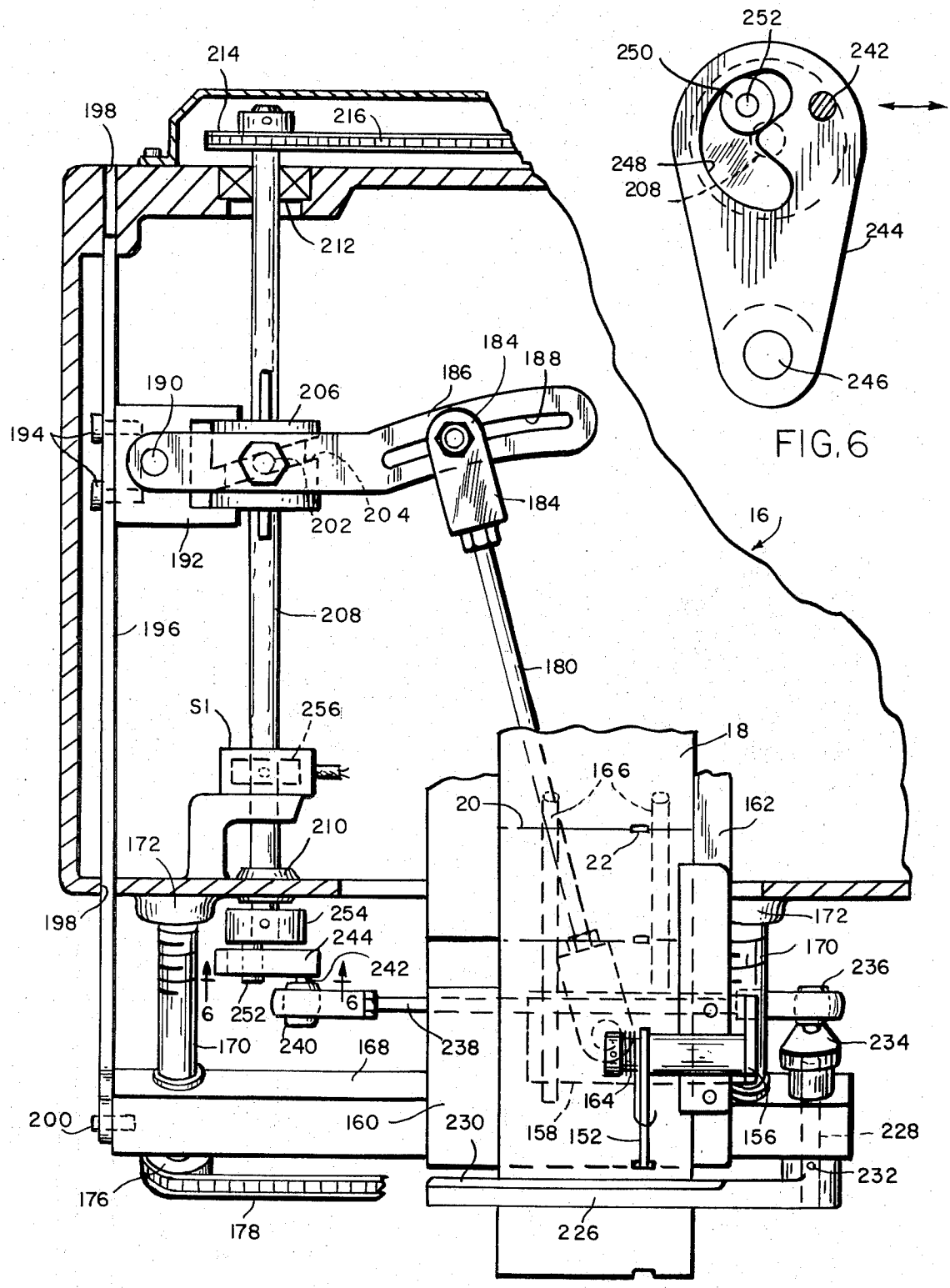
214
216
198
212
184
188
186
190
206
194
202
204
184
192
16
208
196
180
S1
256
18
166
20
162
22
210
172
198
254
244
242
6
252
6
170
240
168
238
172
170
236
234
164
200
160
230
158
152
156
228
232
176
178
226

FIG.5

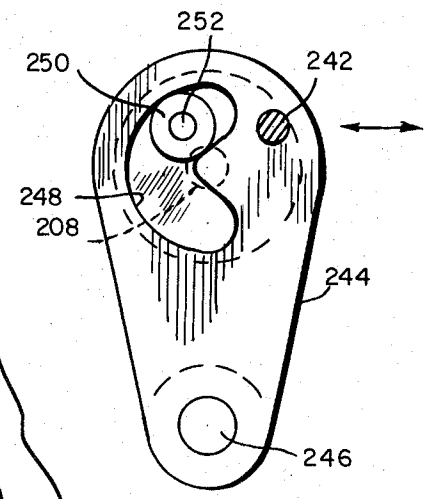
252
250
242
248
208
244
246

FIG.6

MULTILINE OFFSET PRINTING MACHINE

BACKGROUND OF THE INVENTION

Multiline printing by means of printing elements such as band set and ring set printing heads, type chases and printing plates is limited by the physical construction of the printing elements to arrangements corresponding to the spacing of the indicia on the printing elements. The apparatus of this invention is designed to overcome the limitations imposed by such prior printing elements and specifically to enable applying indicia to a specific area at any desired spacing and/or in overlapping relation, and to provide for versatility of disposition especially in printing tags or tickets for marking retail items with such information as maker, brand, lot number, date and other identification indicia.

SUMMARY

Printing apparatus comprising longitudinally spaced indicia mounting stations, indicia at said stations, an instrumentality movable along a predetermined path relative to said indicia mounting stations, said instrumentality embodying an element of predetermined area arranged to be presented to each station for receiving from each of said stations a transfer of material corresponding to the indicia at said stations so that the element bears a predetermined composition of material and for thereafter moving the instrumentality to present said element in transferring relation to a part to be printed with said transferrable material. There is a second instrumentality for applying a transferrable material to the indicia at said stations. The indicia at said stations are supported adjacent said path and there is means for selectively presenting indicia at certain of the stations into said plane for an application of transferrable material thereto. A print station, at which there is a support for an article to be printed and an ink station where there is a pad for containing ink, are supported along said path and there is means for moving the aforesaid instrumentalities which comprise an ink roll and a print roll relative to the ink station and print station to take ink from the ink pad an apply it to the indicia at the indicia stations and to receive ink prints of the indicia at the indicia stations and apply the ink prints to an article on the support at the print station. There is also means situated along said path of travel of the ink and print rolls to withhold the ink roll from engagement with an article at the print station and to withhold the print roll from the ink pad at the ink station. A cleaning station is supported adjacent the path in a position above the ink pad so that the print roll in its retracted position travelling by the ink pad becomes engaged with said cleaning pad and is wiped clean. The indicia at the indicia stations are supported in planes parallel to said path so that the ink roll and print roll have tangential engagement with the indicia and the areas or tracts within which the indicia are arranged to be supported at these stations correspond substantially to the circumferential areas of the rolls. There is means for supplying successive predetermined lengths of strip material to the support at the print station in a direction transverse to the path of movement of the ink roll and print roll comprising at one side a source from which strip material is withdrawn and the other side feed means for withdrawing the strip material. The feed means comprises a reciprocably mounted finger and means for effecting reciprocation in timed relation with the movement of the ink roll and print roll along said path. There is means for adjusting the feed finger to provide for registering the ticket strip with the print roll and for adjusting the stroke of the feed finger according to the ticket length. A cutter bar is provided for cutting the printed strip into ticket lengths and there is kinematic mechanism for effecting its operation in timed relation with the reciprocation of the feed finger to effect cutting at the forward movement of the feed finger.

The invention will now be described in greater detail with reference to the accompanying drawings wherein:

FIG. **1** is a perspective of the printing machine of this invention;

FIG. **2** is a plan view of strip material which is to be printed, divided into separable ticket portions of predetermined length;

FIG. **2***a* diagrammatically illustrates the successive arrangements of the indicia, print and ink stations in relation to the print rolls and ink rolls;

FIG. **3** is a vertical section longitudinally of the machine with parts shown in elevation taken on the line **3—3** of FIG. **1**;

FIG. **4** is a vertical section taken transversely of the machine taken on the line **4—4** of FIG. **1**, showing one of the print rolls at the print station;

FIG. **4***a* is a fragmentary section, partly in elevation, showing one of the several like supports for the cam bars;

FIG. **5** is a fragmentary horizontal section with parts shown in elevation taken on the line **5—5** of FIG. **3**; and

FIG. **6** is a view taken on the line **6—6** of FIG. **5**.

Referring to the drawings (FIG. **2***a*) the printing machine of this invention comprises, as diagrammaticaly shown herein, a plurality of indicia stations A-A-A, a print station B, an ink station C and optionally a cleaning station D arranged along a predetermined path and at least one print roll **10** and one ink roll **12** movable along the predetermined path by means, for example, of an endless conveyor **14** relative to the indicia supporting stations, print station, ink station and cleaning station. The aforesaid stations, print and ink rolls and the means for effecting movement of the print and ink rolls relative to said stations are supported on and within a box **16.**

The machine is designed especially to print indicia at predetermined positions and in predetermined relation to each other upon strip material **18** (FIG. **2**); for example, strips of cardboard, divided into separable tickets lengthwise of a predetermined size by transverse cut lines **20** and having at intervals corresponding to the distance between cut lines feed slots **22.** It is to be understood that articles other than ticket strips may be printed with the machine by providing appropriate means for delivering the articles to the print station for printing and removing the printed articles from the print station following printing.

Referring specifically to FIG. **3** the indicia stations are spaced along the top of the box **16** and comprise indicia carrying assemblies **28, 30** and **32** mounted in openings **24** in the top. The assembly **28** comprises a plurality of discs, on the peripheral surfaces of which are indicia, mounted for rotation about a horizontal axis parallel to the path of movement to present a single line or column of indicia parallel to the path. The assembly **30** is a chase within which indicia may be set up in fixed relation both along the path and transversely

thereof. The assembly **32** comprises a plurality of bands supported in parallel relation to each other on which there are indicia which are arranged to be traversed along the path so as to present lines or columns of indicia along the path and transverse thereto. The disc and band supported indicia provide for selectively positioning indicia adjacent the path of movement of the ink roll and print roll. The chase is removable to permit replacement with a different arrangement of indicia. At each of the stations A-A-A selected indicia **34, 36** and **38** are supported by the respective assemblies parallel to the path of movement of the print rolls **10** and the ink rolls **12** and in areas which correspond at least to the width of the rolls times their circumferences. The indicia may be type, rubber plates, changeable characters on bands or rings, embossed plastic plates or any other raised printing surface. Thus the indicia in each of the areas can be located to coincide with any arrangement desired with the indicia in the other areas when combined on the print rolls.

The box **16** is divided at one end, the left, as shown in FIG. **1**, into lower and upper sections **40** and **42** between which there is an open end gap **44** within which the print station B is located on a horizontal support **46** (FIGS. **3** and **4**) which extends transversely across the upper side of the lower section **40** from side to side over which the strip **18** is advanced for printing by feed means which will be described hereinafter, - the strip, as shown in FIG. **4**, enters the gap **44** between the sections at the left-hand side, crosses the support and leaves through the gap at the right-hand side. The portion of the support **46** directly below the path of the print and ink rolls is parallel to the axis of rotation of these rolls while the portions at either side, respectively, incline upwardly from the infeed side and downwardly toward the discharge side. A cushion block **48** is recessed into the support **46** within the area over which the ticket strip passes.

The ink station C is located beyond the print station in the direction of movement and comprises a receptacle **50** containing an ink pad **52.** The receptacle is mounted between the side walls of the box on brackets **54—54** with the surface of the pad parallel to the path of movement of the print rolls and ink rolls. The ink pad may be of any commercially available kind and is removably mounted to enable replacement when it becomes depleted.

Above the ink pad at the cleaning station D there is removably mounted a frame **56** to which there is attached a cleaning pad **58** comprising a sponge rubber backing with an absorbent cloth cover impregnated with mineral oil to decrease wiping friction. Rotation of the print rolls causes rubbing contact with the entire circumferential surface when the pad length equals the circumference of the rolls. An opening **60** (FIG. **1**) provided in the side wall of the box opposite the cleaning pad enables removing and replacing it when necessary.

The conveyor **14** by means of which the print rolls and ink rolls are moved along the aforesaid predetermined path comprises spaced parallel, longitudinally extending link chains **62—62** (FIGS. **3** and **4**) entrained at their ends about longitudinally spaced parallel sprockets **64—64** mounted on spaced parallel, horizontally disposed shafts **66—66,** the opposite ends of which are supported by bearing members **68—68** supported by the side walls of the box. The shaft **66** at the right-hand end of the machine, as shown in FIG. **3**, extends through the side wall at the left side (FIG. **4**) and has mounted on it a sprocket **72** about which is entrained one end of a chain **74,** the opposite end of which is entrained about a sprocket **76** fastened to the drive shaft of a motor M, the latter being mounted within the box at the bottom and providing the means for driving the conveyor chains.

There are two print rolls and two ink rolls and these are rotatably mounted at equal distances and alternately, that is, with a print roll between each two ink rolls and conversely an ink roll between each two print rolls on horizontal shafts **80** and **82** fastened, respectively, to the chains **62—62** by bracket members **84—84** and **86—86** (FIG. **4**) so that these shafts are carried bodily by the chains along the aforesaid predetermined path relative to the indicia station, print station, ink station and cleaning station.

The print roll **10** is a smooth surfaced cylinder comprised of rubber or like material, at one end of which there is a hub **88.** The ink roll **12** is also a smooth surfaced cylinder comprised of a rubber or rubber like material, also provided at one end with a hub **90.** Alternatively, a "Porelon" ink roll may be employed in place of a rubber roll. "Porelon" is the trademark for an ink saturated roll which may be purchased from S. C. Johnson & Co., Inc., Racine, Wis. If a "Porelon" roll is used the ink pad is omitted. The hubs **88** and **90** have, respectively, mounted thereon gears **93** and **94** by means of which the print rolls and ink rolls are adapted to be rotated as they travel along the aforesaid path and rotation is effected by spaced parallel rack bars **96** and **98** connected at their ends by arcuate rack bars **100—100** with which the gears are held engaged and which collectively control the rotation of the gears as they travel along the predetermined path. The rack bars are mounted on the side wall of the box at one side only, the left, as shown in FIG. **4.** Along the sides and one end of the box at the inner side and adjacent the top there is a ledge **102** on which there are mounted, one at each side, a shelf **104** which extends along the entire length of the box. The rack bar **96** is fastened to the underside of the shelf **104** at the left side of the box by bolts **105.** The rack bar **98** is fastened to a cam bar which, in turn, is fastened at its opposite ends to the end walls of the box as will appear hereinafter. The arcuate rack bars **100—100** are fastened to the ends of the rack bars **96, 98** by bolts **106.** The teeth along the upper rack bar **96** and along the arcuate rack bars **100—100** are all in the same plane while the teeth along the lower rack bar **98** are stepped to have inner and outer portions **108, 110** adapted to be engaged, respectively, by the gears **93** and **94.** The inner portion **108** in the region of the printing station is at a lower level than the outer portion **110** and in the region of the ink pad is at a higher elevation than the outer portion. The sum of all the gear teeth around the track must be an even multiple of the number of teeth on the gears attached to the rolls and the pitch diameters of the roll gears must equal the roll diameters so that any given point on the rolls will always bear the same relationship with the tracks on successive cycles around the tracks.

In traversing the ink rolls and print rolls the print rolls must be held in a position to have ink transferring relation with the indicia carried by the assemblies **28, 30** and **32** at stations A-A-A and to have ink transferring relation to the strip **18** at the print station B but must be withheld from the ink transferring relation with the

ink pad at the ink station C whereas the ink roll must have ink transferring relation with the ink pad at the ink station C and with the indicia at the indicia stations A-A-A, but must be withheld from ink transferring relation with the strip at the print station B. To provide for this cam bars **112—112, 114—114** and **116—116** are mounted along the inner sides of the conveyor chains at each side. Cam bars **112—112** are fastened to the respective shelves **104—104** by bolts **118** and have longitudinally extending cam surfaces **120—120** which are parallel to the rack bar **96.** The cam bars **114—114** are supported from the side walls of the box by spacer members **122** (FIG. 4*a*) to which they are attached by bolts **124.** The cam bars **114—114** have upper, longitudinally extending cam surfaces **126—126** which parallel the cam surfaces **120—120** and lower longitudinally extending cam surfaces **128—128** which are parallel to the lower rack bar **98** and are transversely stepped as are the rack teeth along the lower rack bar having inner and outer portions **130** and **132.** The cam bars **116—116** are fastened at their ends to the box by bolts **134** and have upper longitudinally extending cam surfaces **136—136** which parallel the cam bars **114—114** and are transversely correspondingly stepped to have inner and outer surfaces **138** and **140.** The spaced parallel cam surfaces **120, 126, 128** and **136** at each side provide cam tracks **142, 144** along the upper and lower runs of the conveyor chains which are adapted to guide the ink and print rolls as they travel along relative to the several stations so as to have at times ink transferring relation thereto and at other times to be withheld from such ink transferring relation. To this end the shafts **80** and **82** have mounted thereon cam follower elements **146—146** and **148—148** which are arranged to travel along the tracks. The upper cam tracks support the ink and print rolls for engagement with the indicia at the several indicia stations A-A-A. The lower cam tracks as related above are stepped, as shown in FIG. **3,** to provide inner and outer tracks with which the cam followers **146, 148** are respectively engaged. The inner track in the region of the print station with which the followers **146—146** are engaged is at the lower level so that the print roll is moved along the lower part at a level to have contact with the ticket at the print station. The outer track in this region with which the followers **148—148** are engaged is at a higher level so that the ink roll when moving along the region of the print station will be held out of engagement with the ticket. Beyond the work station in the region of the work pad the level of the inner and outer tracks reverses so that as the print roll approaches the ink station it will be raised above the ink pad and as the ink roll approaches the ink station it will be lowered into engagement with the ink pad.

At the cleaning station the cleaning pad is supported at a level such that the print roll when travelling above the ink pad will have contact with its surface. Rotation of the print roll as it travels along in engagement with the cleaning pad will wipe the ink from its surface. The cleaning pad, as shown, is mounted on a frame **56** slidably mounted in an opening **150** provided in the cam bar **114** at the right side of the machine, as shown in FIG. **3,** to enable withdrawing it therefrom through the opening **60** in the side of the box for replacement. Alternatively, the cleaning pad may be supported by a vertically reciprocable member for movement from an elevated position to a position for engagement with the print roll as the latter travels by it.

As was previously mentioned a feed finger is provided for intermittently advancing the strip **18** transversely of the print station. The feed finger **152** (FIGS. **4** and **5**) is pivotally supported at one end on a spindle **154** fixed to a post **156** at one end of a block **158** and is yieldably held engaged with the upper side of a cutting block **160** at the lower end of an apron **162** extending downwardly from the support **46** through the gap at the right side of the machine by a coiled spring **164** mounted on the spindle with one end fixed thereto and the other engaged with the finger. The block **158** is mounted on spaced parallel rods **166—166** fixed at one end to a bar **168** which is mounted on a pair of spaced parallel screws **170—170** rotatably supported in bosses **172—172** in the side wall of the box at the right side of the machine (FIG. **4**). One of the screws has fixed to it a knob **174** and there are sprockets **176—176** on the screws about which is entrained a chain **178** so that rotation of the screw to which the knob is attached will rotate the other screw. Rotation of the screws enables adjusting the feed finger in relation to the print area which provides the means for registering the composition to be printed with preprinted information or perforations on the ticket strip. Reciprocation of the feed finger **152** is provided for by a link **180** connected at one end by a universal coupling **182** to the block **158** and at its other end by a universal coupling **184** to an arm **186** for adjustment along an arcuate slot **188,** the center of curvature of which coincides with the center of rotation of the opposite end of the link on the universal coupling **182.** Thus the length of the feed stroke can be changed to match the length of various tickets to be printed by moving one end of the feed link **180** to different positions along the arcuate slot **188.** The forward position of the feed finger remains constant for any setting of the feed length and this can be made to coincide with the cutter bar for cutting the ticket strip into tickets as will appear hereinafter. The arm **186** is pivotally connected at **190** to a block **192,** the latter being fastened by bolts **194** to a slide bar **196** mounted in slots **198—198** in the side walls of the box with one end extending through the slot in the right-hand side wall and connected by a pin **200** to the bar **168** so that the driving linkage for the finger is movable in adjustment therewith. The arm **186** has fixed to its underside a pin **202** which is engaged within a cam groove **204** formed in the peripheral surface of a barrel cam **206** splined to a shaft **208** so as to be movable along the shaft with the adjustment of the feed finger. The shaft **208** is supported in suitable bearings **210** and **212** and extends through the latter bearing to the outer side of the side wall at the left-hand side (FIG. **4**) and has fixed to it a sprocket **214.** A chain **216** is entrained at one end about the sprocket **214** and at its other end about the sprocket **218** (FIG. **3**) which in turn is driven by a sprocket **220,** a chain **222** and a sprocket **224** on the shaft **66.**

It may be desirable to cut the printed tickets from each other following printing and as they are discharged and so there is provided a cutter bar **226** (FIGS. **4** and **5**) which is fixed at one end to a stub shaft **228** rotatably supported on the bar **168.** The cutter bar has a cutting edge **230** which is transverse to the direction of movement of the strip and is supported in shearing relation to the lower edge of the cutting block **160**

which, as illustrated in FIG. 4, is supported at the level of the apron 162 by the bar 168 and is movable therewith. The cutter bar is fixed to one end of the shaft 228 by a pin 232 and is reciprocated by an arm 234 fixed at one end to the stub shaft 228. The distal end of the arm 234 is connected by a universal coupling 236 to one end of a rod 238. The other end of the rod 238 is connected by a universal coupling 240 and pin 242 to one end of an arm 244. The other end of the arm 244 is pivotally mounted on a stub shaft 246 fixed to the side wall of the box. The arm 244 contains a kidney-shaped slot 248 within which there is engaged a follower 250 mounted on a pin 252 comprising part of an eccentric 254 fixed to the shaft 208. Rotation of the shaft 208 will thus effect reciprocation of the cutter bar in timed relation with the reciprocation of the feed finger to effect cutting at the forward end of the reciprocable movement of the feed finger.

A switch S is provided for starting the operation of the machine and under ordinary circumstances the ticket strip is fed through the machine automatically until the desired number of tickets have been printed. To prevent the machine stopping when it is shut down with the print roll engaged with the strip at the work station which would make it difficult to remove the strip or to feed a new strip into position a cam 256 mounted on the shaft 208 which will hold the control circuit closed following movement of the switch S to the "off" position until the switch S^1 in the circuit is opened by engagement of the cam therewith.

By reason of the arrangement of the indicia station in the machine it is possible to set up a variety of compositions of indicia longitudinally and transversely of the ticket so as to place the indicia at any selected position of adjacency and within or around other indicia thus to afford a wide choice of marking for brand names, job lots, numbers and sizes and to add and subtract indicia at times as desired without interrupting the printing operation. Minor adjustments of the indicia assemblies 32 and 28 are provided for by slots and bolts 258, 260, 262 and 264 by means of which these assemblies are attached to the top of the box.

The provision of the upper and lower sections open at the end of the box in the region of the print station facilitates threading the strip into place with the least amount of difficulty. To provide for replacement and inspection of the indicia mounting assemblies at the top of the box and also to enable removing and replacing the ink pad and cleaning pad the top of the box is connected by a hinge 266 at one end so that it may be easily raised.

It should be understood that the present disclosure is for the purpose of illustration only and that this invention includes all modifications and equivalents falling within the scope of the appended claims.

I claim:

1. Printing apparatus comprising a supporting structure embodying a rigid horizontally disposed top part containing a plurality of longitudinally spaced openings, indicia bearing assemblies mounted on the top part in the openings with the indicia situated in a common plane at the under side of the top part, transversely spaced parallel conveyors supported on the structure below the top part, said conveyors having longitudinally extending upper and lower runs, said upper runs being parallel to said plane of the indicia, a print platen and an ink pad supported on the structure adjacent the lower runs of the conveyors, ink and print rolls journaled at their ends between the conveyors for movement thereby relative to the ink pad, indicia and print platen, means for driving the conveyors to effect translational movement of the ink roll and print roll, means operable by the translational movement of the ink and print rolls to effect rotation about their axes, means for supporting that portion of the runs of the conveyors travelling along the upper runs at any time at a level such that the ink and print rolls have tangential engagement with the indicia, said means providing for lifting the ink roll as it is moved along the lower runs away from the print plate and then depressing it to a position of tangential engagement with the ink pad and for maintaining the print roll at a level to have tangential engagement with the print plate and then lifting it from the ink pad and means for delivering tickets from a strip of ticket material to present one ticket at a time to the print platen in timed relation with the arrival of the print roll at the print platen.

2. Apparatus according to claim 1, comprising two or more ink rolls and print rolls arranged alternately.

3. Apparatus according to claim 1, wherein there is a cleaning pad located above the lower runs of the conveyors beyond the print platen with which the print roll is brought into tangential engagement when lifted away from the ink pad.

4. Apparatus according to claim 1, wherein the indicia asemblies are removably mounted in the openings in the top part for ease of replacement with assemblies of different indicia.

5. Apparatus according to claim 1, wherein the indicia assemblies are adjustable in the openings both longitudinally and transversely with respect to the upper runs of the conveyor.

6. Apparatus according to claim 1, wherein the structure has in addition to the top part an intermediate part on which the print platen is mounted adjacent the lower runs of the conveyors and wherein there is an open end gap transversely of the structure providing access to the upper side of the print plate such as to enable delivering the strips of the ticket material to be printed through one side onto the print platen for printing and for removing the printed tickets from the other side.

7. Apparatus according to claim 1, wherein the top part is hingedly connected at one end for pivotal movement about a horizontal axis to enable lifting the assemblies away from the upper runs of the conveyors for access thereto and to the interior of the structure.

8. Apparatus according to claim 1, wherein the conveyors supporting the print roll and ink roll for movement are link chains and there is means for rotating the print roll and ink roll in timed relation as they are moved in translation relative to the indicia to effect a complete turn while in engagement with the indicia.

9. Apparatus according to claim 1, comprising feed means for supplying successive predetermined lengths of strip ticket material to the print platen in a direction transverse to the path of movement of the ink and print rolls, comprising at one side a source from which the strip ticket material is withdrawn and at the other side feed means for drawing the strip ticket material from the source across the print platen.

10. Apparatus according to claim 9, wherein the print platen has a lateral extension and the feed means comprises a reciprocably mounted feed finger mounted

on the extension for reciprocation in a direction lengthwise of the strip and transverse to said path of movement.

11. Apparatus according to claim **10**, comprising a link pivotally connected at one end to the feed finger, a reciprocably oscillatable arm, means pivotally connecting the other end of the link to said arm for adjustment therealong on an arc having as its center the pivot connecting the one end of the link to the feed finger, and means for effecting oscillation of the arm.

12. Apparatus according to claim **11**, comprising a cam for effecting oscillation of said arm.

13. Apparatus according to claim **11**, wherein the arm contains an arcuate slot, the center of curvature of which coincides with the axis of the pivot connecting the one end of the link to the feed finger, and means for connecting the other end of the link to the arm for adjustment along said arcuate slot.

14. Apparatus according to claim **11**, wherein the strip to which print is to be applied is provided with uniformly spaced slots corresponding to the lengths of the strips to be printed with which the feed finger is adapted to be engaged to advance the strip at the print platen, and there is means yieldably holding the feed finger engaged with the strip.

15. Apparatus according to claim **9**, comprising a cutter bar supported at the print platen transversely of the direction of discharge of the strip on the support, and means for effecting operation of the cutter bar in timed relation with the reciprocation of the feed finger such as to effect cutting at the termination of the forward stroke in the reciprocal movement of the feed finger.

16. Apparatus according to claim **15**, comprising means supporting the feed finger and cutter bar for adjustment longitudinally of the direction of feed.

17. Apparatus according to claim **15**, comprising screws mounting the support for the feed finger and cutter bar for adjustment longitudinally of the direction of feed.

18. Apparatus according to claim **15**, comprising a shear plate supported at the level of the extension in shearing relation to the cutter.

19. Apparatus according to claim **18**, comprising a support mounting the shear plate, cutter bar and feed finger for movement along the direction of feed and means for adjusting said support while maintaining a continuous driving connection to the feed finger and cutter bar.

20. Apparatus according to claim **15**, comprising a motor and kinematic means for effecting movement of the ink and print rolls, the feed finger and the cutter bar, a starting switch for initiating operation of the motor, a stop switch for stopping operation of the motor, and means for holding the motor circuit intact following actuation of the stop switch until the print rolls and ink rolls have moved beyond the print station.

21. Apparatus according to claim **20**, wherein said means comprises a cam operable in consonance with the reciprocation of the feed finger.

* * * * *