Nov. 17, 1964 H. DORJEE ETAL 3,157,452

SOCKET CONNECTOR FOR PRINTED CIRCUIT BOARDS

Filed March 1, 1961

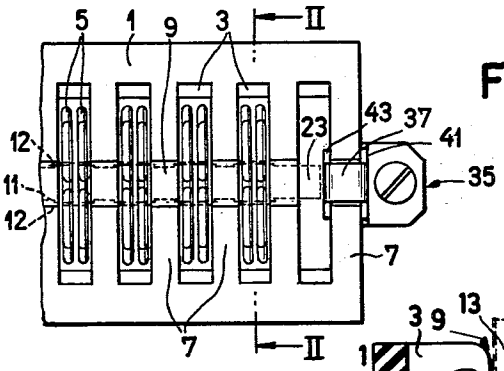

FIG. 1

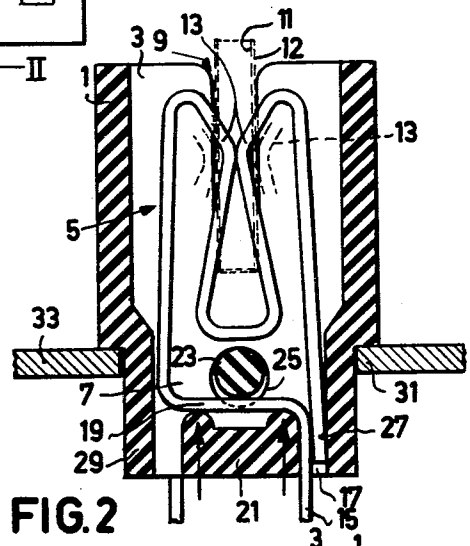

FIG. 2

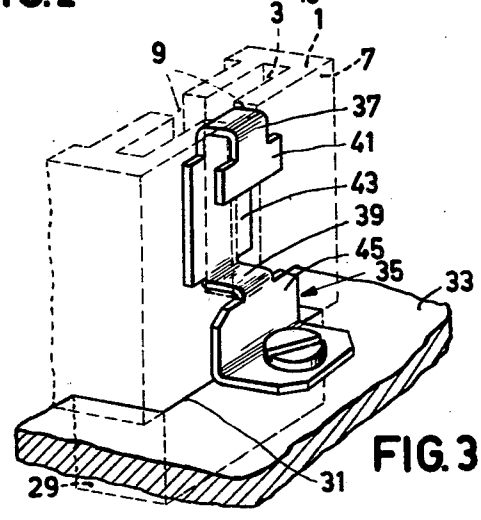

FIG. 3

INVENTORS
HENDRIK DORJEE.
JAN LESTERHUIS.

BY Frank R. Trifari
AGENT

United States Patent Office 3,157,452 Patented Nov. 17, 1964

3,157,452

SOCKET CONNECTOR FOR PRINTED CIRCUIT BOARDS

Hendrik Dorjee and Jan Lesterhuis, Emmasingel, Eindhoven, Netherlands, assignors to North American Philips Company, Inc., New York, N.Y., a corporation of Delaware

Filed Mar. 1, 1961, Ser. No. 92,694
Claims priority, application Netherlands Mar. 4, 1960
3 Claims. (Cl. 339—176)

This invention relates to multiple plug socket connectors for co-operation with contact plugs having strip-shaped contacts located in at least one plane, comprising an insulating housing in which juxtaposed parallel compartments are formed, each containing at least one wire-shaped or strip-shaped resilient contact.

The contact plug may comprise an insulating plate having provided on its surface parallel printed contact paths which constitute the plug contacts.

Particular difficulties are involved in securing the wire-shaped or strip-shaped contacts in the housing of the plug socket in a reliable manner. It is already known to form the portions of the spring contacts to be secured by embedding in the housing, which is usually made of synthetic resin. However, in this method, it is substantially impossible for the remaining portion of the spring plate, which afterwards must make contact with the contact plug and be capable of springing unhindered, to be kept clear of the synthetic resin mass during moulding the housing.

An object of the invention is to provide a solution of the problem of securing the resilient contacts. The solution according to the invention consists in that each spring contact possesses between a freely movable resilient portion, of which the contact-making portion forms part, and one of its ends, which end is introduced into a fitting aperture of the base of the relevant partition, a securing portion extending at right angles to the said end and urged at two points against the bottom of the corresponding partition by means of a common clamping rod passed in the transverse direction through all the partitions and engaging the securing portion of the spring at a point located between the said two points.

In order that the invention may be readily carried into effect, it will now be described in detail, by way of example, with reference to the accompanying diagrammatic drawing, in which:

FIGURE 1 is a plan view on one embodiment of a device according to the invention;

FIGURE 2 is a cross-sectional view taken along the line II—II of FIGURE 1, and

FIGURE 3 is a perspective view of a detail of the device shown in FIGURES 1 and 2.

The multiple plug socket connector shown comprises an insulating housing 1, preferably of moulded material, in which a plurality of juxtaposed parallel compartments 3 are formed, each containing at least one wire-shaped or strip-shaped resilient contact 5. In the embodiment shown, the spring contacts are wire-shaped and two spring contacts 5 of identical shape are arranged side by side in each compartment 3. The compartments are separated from one another by means of partition walls 7 formed in the housing 1, which partition walls are provided with slot-like interruptions 9, this allowing a plate-shaped insulating contact carrier or printed circuit board 11 (shown in broken lines in FIGURE 2) to be introduced into the housing 1. The plate 11 is provided in known manner with strip-shaped and preferably printed contact paths 12 (shown in broken lines in the figures), which are located in at least one plane, that is to say one or each side of the contact carrier 11 may be provided with a plurality of strip-shaped contact paths which

are situated in groups in one plane, that is to say at the surface on one or each side of the contact carrier. However, as an altenative, the contact plug could be provided with rigid strip-shaped pins situated in one plane. As can be seen from FIGURE 2, each spring 5 possesses in known manner a substantially M-shaped portion which is arranged to spring freely in the corresponding compartment 3 of the housing 1. The portions 13 of the spring 5 serve to make contact with the strip-shaped contacts on the carrier 11. The position of the portions 13 with the contact plug inserted is shown in broken lines in FIGURE 2. One end 15 of each spring 5 is introduced into an aperture 17, formed in the base of the partition 3 so as to be anchored therein. This end preferably projects from the housing 1 at the lower side thereof and serves as a soldering tongue.

Between the freely resilient M-shaped portion and the end 15, each spring possesses a securing portion 19 approximately at right angles to the end 15. The portion 19 is urged against a base 21 of the corresponding partition 3 by means of a common clamping rod 23 passed in the transverse direction through all the compartments 3 and engaging the spring portion 19 at a point located between the two points indicated by the arrows 21. In fact, each partition 7 is provided, in addition to a slot 9, with an aperture 25, preferably circular, and these apertures permit the clamping rod 23, which is preferably made of nylon, to be passed through all the compartment walls and partitions, thus clamping all the spring contacts 5 at the same time in position in the associated compartments 3 while retaining the possibility of free resilience for the M-shaped portions of the spring contacts.

Preferably, the free end 27 of the M-shaped portion of each spring contact 5, together with the aforementioned end 15 of the spring contact, is introduced into the aperture 17, into which the two wire portions preferably fit in a manner such as to be fixed almost immovably in the housing 1 without the resilience of the remaining portion of the spring contact being impared. The end 27 may project, instead of or together with the end 15, from the housing 1 and serve as a soldering tongue.

The lower portion 29 of the housing 1 may be a little narrower than the remaining portion and be arranged in an elongated aperture 31 of a chassis plate 33, for example of metal. The housing 1 may be secured to the chassis plate 33 in the manner shown in FIGURE 3 by means of two clamps 35 made of metal strip, one of which is shown in perspective in FIGURE 3 (the adjoining portion of the housing 1 is shown in the figures in broken line for the sake of clarity). The clamp 35 has narrower portions 37 and 39 and broader portions 41, 43 and 45 and is bent, as can be seen from FIGURE 3, so that it can be introduced into the slot 9 of the final partition wall 7 of the housing. The narrow portions 37 and 39 are then situated substantially in the slot 9, whereas the broader portions 41, 45 and 43 engage the outer side and the inner side respectively of the last partition wall 7. In view thereof, spring contacts are not provided in the final compartment 3 of the housing. The clamp 35 is screwed in position on the chassis plate 33 and has dimensions which are matched to those of the housing 1 so that the narrow portion 39 engages the base of the last slot 9, thus fixing the housing in position in the aperture 31 of the chassis plate 33. Attachment by means of the described clamp 35 affords the advantage that use is made of a final slot 9 having the same shape as that of the other slots 9. This means that only one type of housing need be manufactured, namely the type containing the maximum number of required compartments 3. If desired, units having a smaller number of parti-

tions may be cut therefrom, which can be fixed by means of the clamps 35 without any subsequent processing. The upper narrow portions 37 of the clamps also serve to guide the side edges of the plates 11 in the direction of length of the housing 1 upon inserting the contact plug.

What is claimed is:

1. A socket for a printed circuit board and the like comprising a housing member of insulating material having a longitudinally extending slot and a plurality of laterally extending compartments formed therein, a generally M-shaped resilient contact member positioned in a plurality of said compartments, a lateral portion at the base of and integral with said contact members, a longitudinal bore in said housing member, and a rod of insulating material within said bore operatively associated wtih the lateral portions of said contact members for securing said contact members within said compartments.

2. A socket for a printed circuit board and the like comprising a housing member of insulating material having a longitudinally extending slot adapted to receive a printed board, a plurality of transversely extending compartments defined by partitions in said housing member, a generally M-shaped resilient contact member positioned in said compartments, said contact members having a lateral portion adjacent the bottom partition of

said housing member defining said compartment, a longitudinal bore in said housing member, a rod of insulating material within said bore engaging the lateral portion of said contact members for urging said lateral portion against said housing member and securing said contact members within said compartments, and at least one leg of said contact member extending through an aperture in said bottom portion defining said compartments.

3. A socket according to claim 2 with the addition of a clamping member for securing said housing member on a chassis plate, said clamping member comprising a generally U-shaped portion fitting within said slot in the end wall of said housing and having broadened portion engaging each side of the associated partition, and an angular plate portion integral with said first named portion.

References Cited in the file of this patent

UNITED STATES PATENTS

2,039,957	Hall	May 5, 1936
2,870,424	Franz	Jan. 20, 1959

FOREIGN PATENTS

1,138,663	France	Jan. 28, 1957
1,089,838	Germany	Sept. 29, 1960

OTHER REFERENCES

Curtis: "Electrical Equipment," October 1942, page 6.