June 7, 1932. C. A. FRICK 1,862,395

BOTTLE REFRIGERATOR

Filed Feb. 2, 1929

Fig. 1.

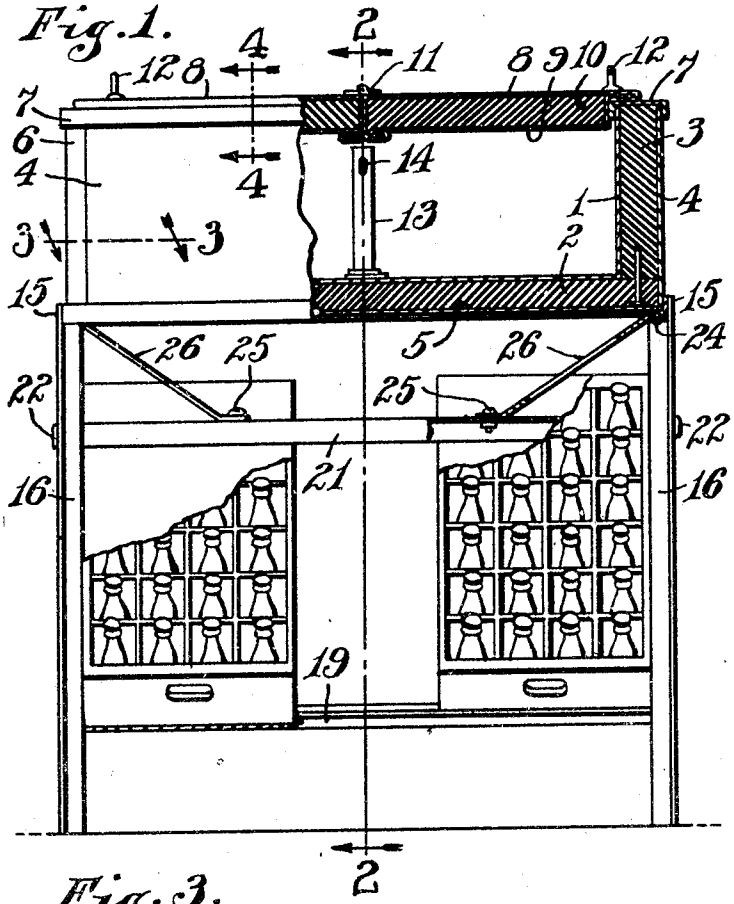

Fig. 2.

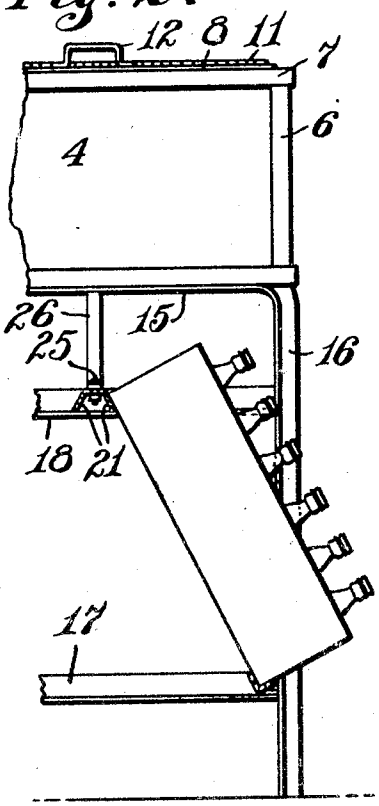

Fig. 3.

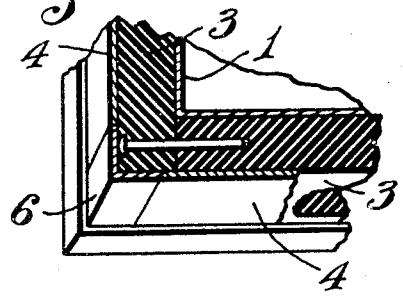

Fig. 5.

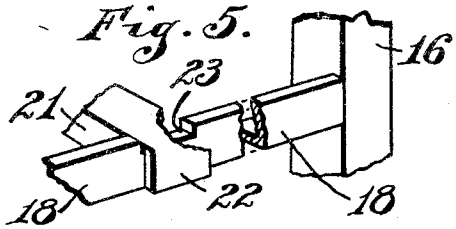

Fig. 6.

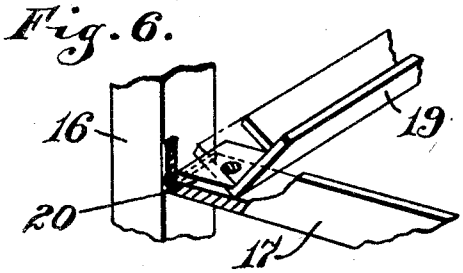

Fig. 4.

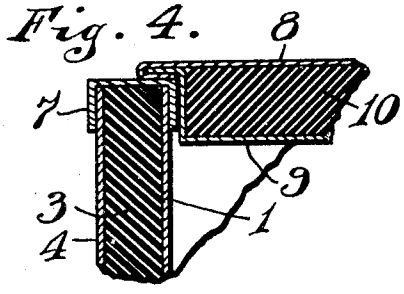

INVENTOR

Chester A. Frick,

BY

Hood + Hahn.

ATTORNEYS

Patented June 7, 1932 1,862,395

UNITED STATES PATENT OFFICE

CHESTER A. FRICK, OF MUNCIE, INDIANA, ASSIGNOR TO GLASCOCK BROTHERS MANUFACTURING COMPANY, OF MUNCIE, INDIANA, A CORPORATION OF INDIANA

BOTTLE REFRIGERATOR

Application filed February 2, 1929. Serial No. 337,038.

My invention relates to improvements in refrigerators and particularly to refrigerators from which bottled carbonated beverages are dispensed.

It is one of the objects of my invention to provide an inexpensive refrigerator which will occupy a minimum space and which may be "knocked down" for shipping purpose and the like. For the purpose of disclosing my invention, I have illustrated one embodiment thereof in the accompanying drawing.

In said drawing,

Fig. 1 is a side elevation, partly in sections of a refrigerator embodying my invention;

Fig. 2 is a sectional view on the line 2—2 of Fig. 1;

Fig. 3 is a detailed section on the line 3—3 of Fig. 1;

Fig. 4 is a detailed section on the line 4—4 of Fig. 1;

Fig. 5 is a detailed perspective, showing the manner of assembling one of the frame braces;

Fig. 6 is a perspective, partly in section showing the manner of assembling the bottom braces of the frame.

In the embodiment of the invention illustrated, I provide an ice tub 1 which is preferably rectangular in shape and open at its top. This tub is surrounded by suitable heat insulating material which may be of any of the well known materials and may be formed in slabs. The bottom slab 2 of insulating material fits over the bottom of the tank or container 1 and extends beyond the edges thereof a distance equal to the thickness of the side slabs 3. The side slabs are placed in position and are held to the bottom slab by suitable nails or the like. Surrounding and enclosing the insulating material are side panels 4 which are preferably formed of sheet metal and the bottom slab 2 of insulating material is also covered by a bottom sheet metal panel 5. The side panels stop short of the ends and their edges make abutting contact with corner angles 6. These parts may be secured together in any suitable manner as by screws and the like and are bound together at their top by a rectangular member, the sides and ends of which are formed of channels 7, the inner leg of which overlaps the upper edge of the interior tank 1 and the outer leg of which overlaps the outer panels and corner posts.

The tank or refrigerator is closed by a suitable cover formed in two hinged sections. Each section comprises a top plate 8 and a bottom plate 9 between which is secured insulating material 10. The top plate extends beyond the edge of the material and the bottom plate has its end turned up and outwardly parallel with the top plate, the edge of which is rolled or seamed in over the out turned portion. At the edge where the two hinged structures abut, the edge of the top plate 10 is turned downwardly parallel with the down turned portion on the bottom plate and the top plate is then turned over the down turned portion of the bottom plate to form a seam which in turn is bent to lie parallel with the cover. Suitable hinges 11 are provided for connecting the two sections together and handles 12 are secured to the top of each section to aid in opening the sections. The box or refrigerator is provided with a drain pipe 13 having a water level opening 14 near the top thereof.

The refrigerator structure above described is supported on a base or frame. This frame comprises the two end members, each of which is formed of angle iron and is bent to form a top cross-bar 15 and the two legs 16. The horizontal portion of the angle is turned inwardly and on the top cross-member provides a rest for the refrigerator box which fits between the vertical portions of the angle member. Extending between the legs 16 are bottom cross-braces 17 and top braces 18 which are likewise formed of angle iron and which at their ends are preferably welded to the legs. By this arrangement each end member comprises a unit in itself.

The two end members are connected by longitudinally extending bottom braces 19, formed of angle members which are turned up to provide V shaped channels. There is provided a pair of these channels on each side and the channels at their ends are slit and have a down turned flattened portion 20

which is bolted to the bottom cross-member 17. Centrally disposed, at or near the top and extending between the top leg 18, there is provided a centrally disposed brace, preferably in the form of a channel having downwardly extending diverging legs 21. The end of this channel is bent down as at 22 to fit over the top brace 18, the top edge of which is in turn notched as at 23 to prevent lateral displacement of the brace. In addition to the above brace there are diagonally disposed bracing members 26 at each end of the base which are bolted as at 25 to the brace 19 and are either bolted or riveted as at 24 to the cross-member 15 of each of the end members.

By the construction of the braces 19, I am enabled to provide a support for cases of bottles as shown. The lower edge of the case fits in the V shaped channel 19 and the upper edge of the case rests on one of the diverging legs 21 whereby the same is maintained in position with the bottles readily accessible. In shipping the device it is obvious that the base or frame may be knocked down by unbolting the braces 19 removing the top brace and disconnecting the braces 26 from the same. These braces 26 may be swung to lie in a plane parallel with the end members and the end frame packed in a compact manner.

I claim as my invention the following:

1. A knock down supporting base for a container, comprising a pair of end members, each formed of single angle iron bent to form a substantially horizontal top member and vertical legs, transversely extending braces connected between the legs of each member, a channeled brace extending between a pair of the transverse braces of each end member and removably connected thereto, said brace being arranged adjacent the legs, a top brace member extending between the transversely extending braces of each end member and removably connected thereto, said top brace forming a rest for the top of a box, the lower edge of which is adapted to be supported by the bottom brace member.

2. A stand for containers, comprising a pair of end members, each formed of a one-pieced member bent to form a horizontal bridge and a pair of legs connected thereto, top and bottom transversely extending braces extending between the legs, a V shaped channel member connecting the bottom braces of the end members and located adjacent the legs, a top bracing member extending between the top transversely extending brace on each end member at a point intermediate of the ends of the brace, to form a support for the upper end of a box, the bottom edge of which rests within said V shaped channel.

3. A supporting stand for a container, comprising a pair of end members, each comprising a unit formed from a single bar of angle iron bent to form a top cross-member and a pair of legs, the legs being connected by top and bottom braces extending between the legs, means for connecting said end members together, comprising bottom braces detachably connected to the respective bottom braces of each end unit at a point adjacent the legs, and a top connecting bar detachably connected to the top braces of each unit, at a point intermediate of the ends of the transverse braces, whereby the bottom connecting members form a support for a box and the top brace forms a rest for the upper edge of the box to sustain the same in an inclined position.

In witness whereof, I, CHESTER A. FRICK, have hereunto set my hand at Muncie, Indiana, this 28th day of January, A. D. one thousand nine hundred and twenty nine.

CHESTER A. FRICK.