US 20120095464A9

(19) **United States**

(12) **Patent Application Publication**

Zeiler et al.

(10) **Pub. No.: US 2012/0095464 A9**

(48) **Pub. Date: Apr. 19, 2012**

CORRECTED PUBLICATION

(54) **IMPLANT PLATE, METHOD AND FACILITY FOR THE MANUFACTURE THEREOF**

(76) Inventors: **Claudius Zeiler**, Munchen (DE); **Ernst Wiedemann**, Munchen (DE)

(21) Appl. No.: **10/635,919**

(22) Filed: **Aug. 6, 2003**

Prior Publication Data

(15) Correction of US 2005/0021033 A1 Jan. 27, 2005
See (63) Related U.S. Application Data.

(65) US 2005/0021033 A1 Jan. 27, 2005

Related U.S. Application Data

(63) Continuation of application No. PCT/DE02/00025, filed on Feb. 8, 2002.

(30) **Foreign Application Priority Data**

Feb. 16, 2001 (DE)..... DE 10107369.0

Publication Classification

(51) **Int. Cl.**
A61F 2/30 (2006.01)

(52) **U.S. Cl.** **606/70**; 606/71; 623/901

(57) **ABSTRACT**

An implant plate according to the invention serves to stabilize a fracture of an upper-arm head and/or a fracture of a proximal upper arm. It is therefore fitted with at least one raised receiving member (**6**) for a flexible fastening member (**29**) on a side, facing away from a bone (**4**), of a head-end portion (**2**) of the implant plate (**1**). Each receiving member (**6**) has an aperture (**7**) extending substantially parallel to an outer edge or contour (**8**), and to the side of the implant plate (**1**) facing away from the bone (**4**), for threading, passing-through, and drawing together the flexible fastening member (**2**). The receiving member (**6**) can be formed using process and plant technology from strip material (**42**), or using externally fabricated receiving members (**6**) that are welded, press-welded, soldered, screwed, or riveted onto the outer side of the implant plate (**1**). The invention also comprises a method and a facility for manufacturing the implant plates, and also their use in surgery and/or orthopedics.

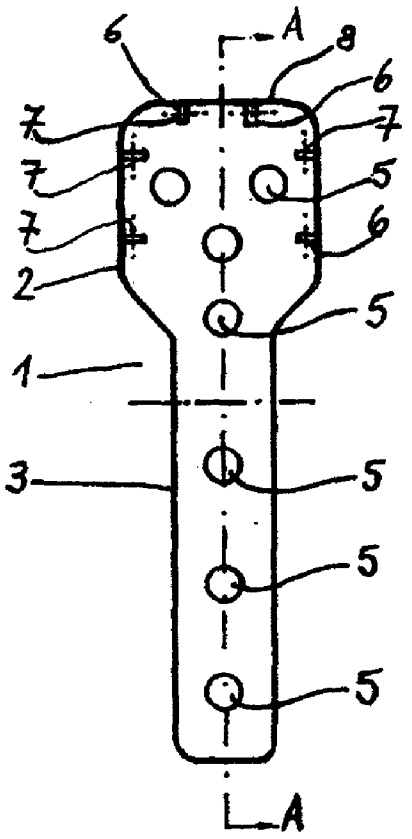

Figur 1a

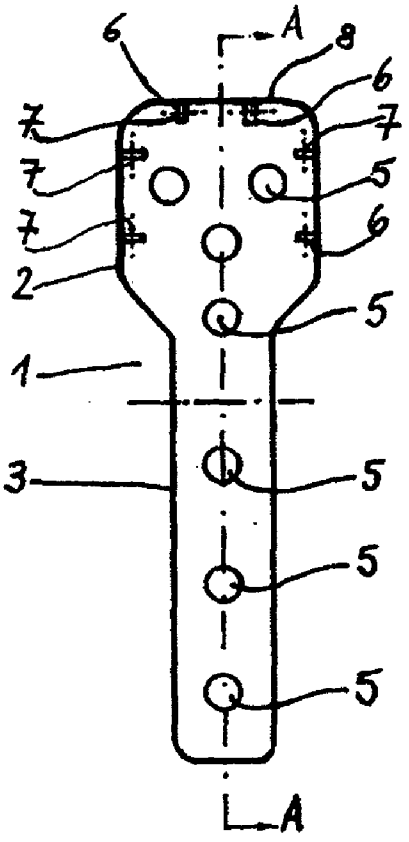

Figur 1b

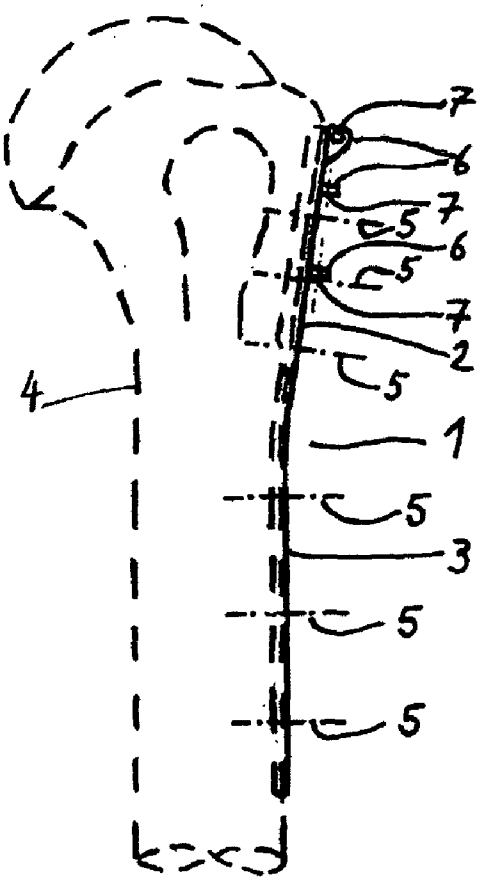

Figur 1c

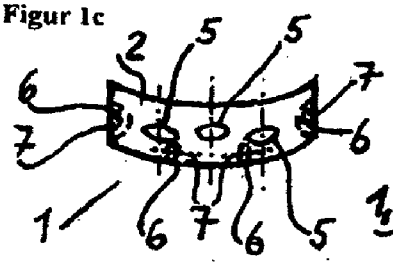

Figur 2

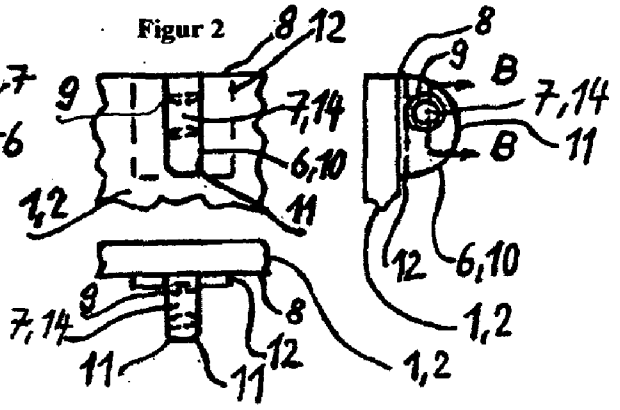

Figur 3a

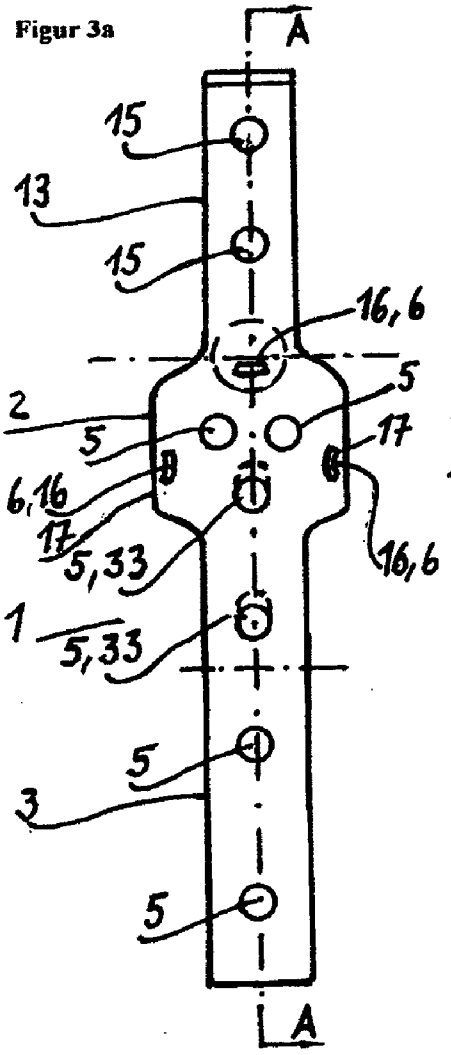

Figur 3b

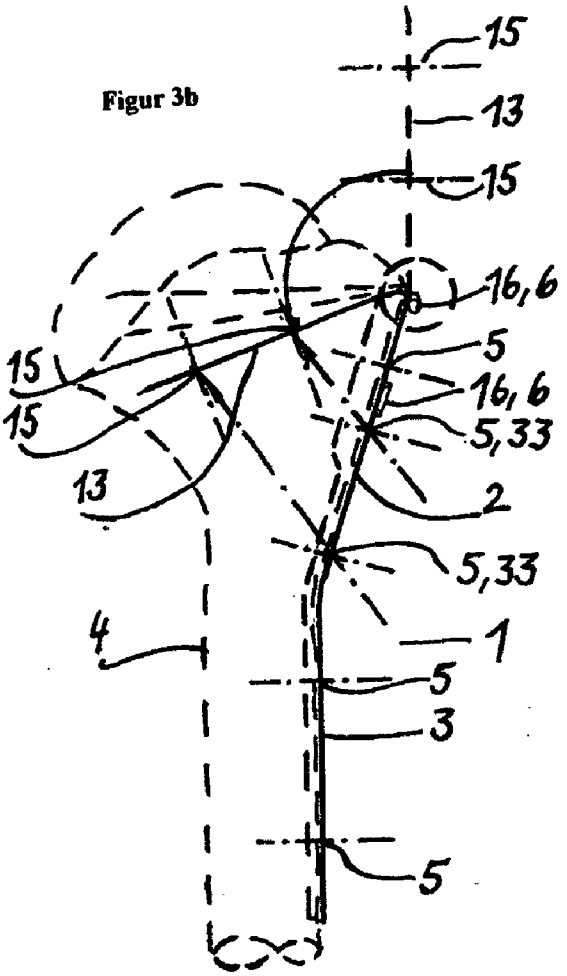

Figur 4

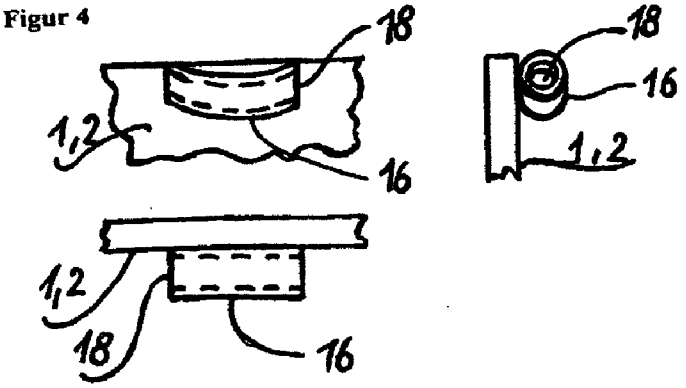

Figur 5

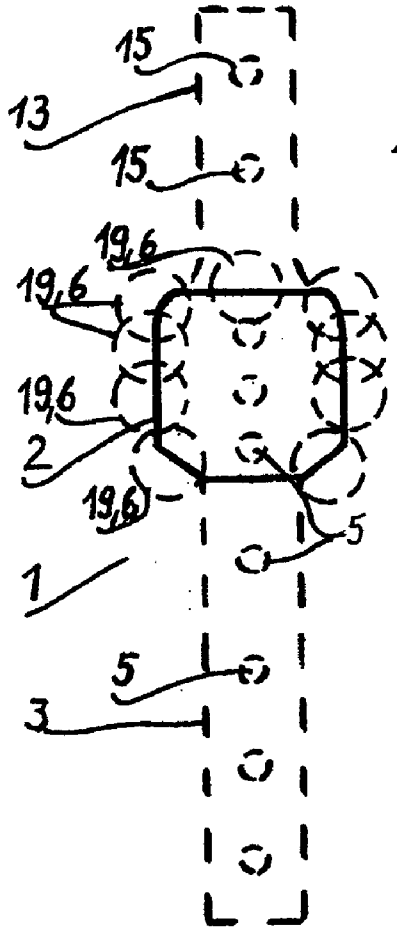

Figur 6

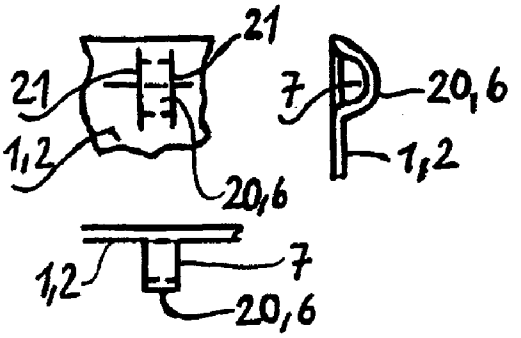

Figur 7

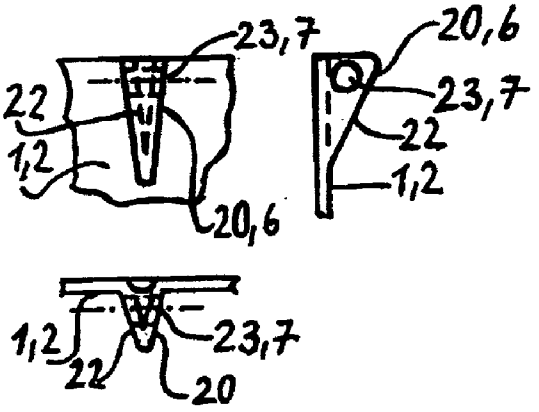

Figur 8

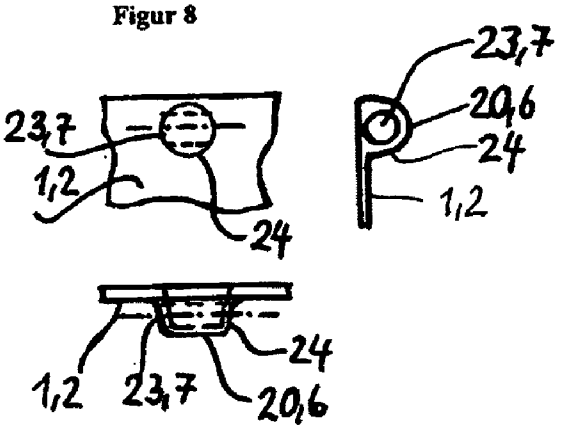

Figur 9

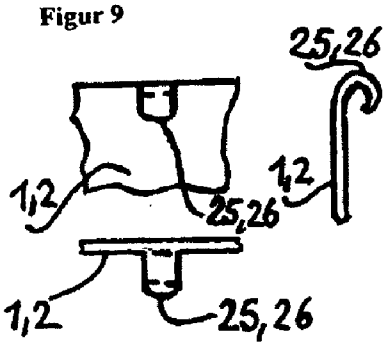

Figur 10

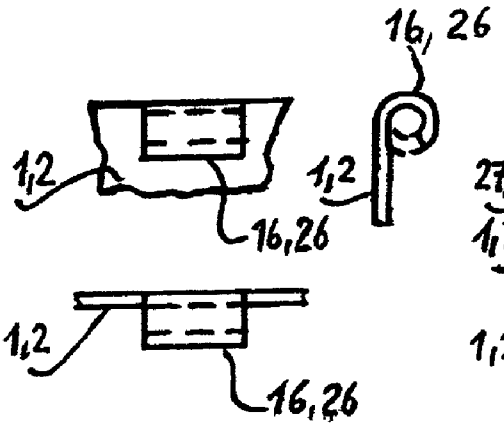

Figur 11

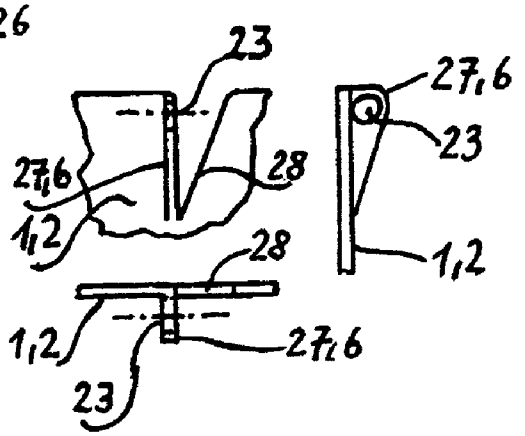

Figur 12 nach Figur 2, Schnitt B-B

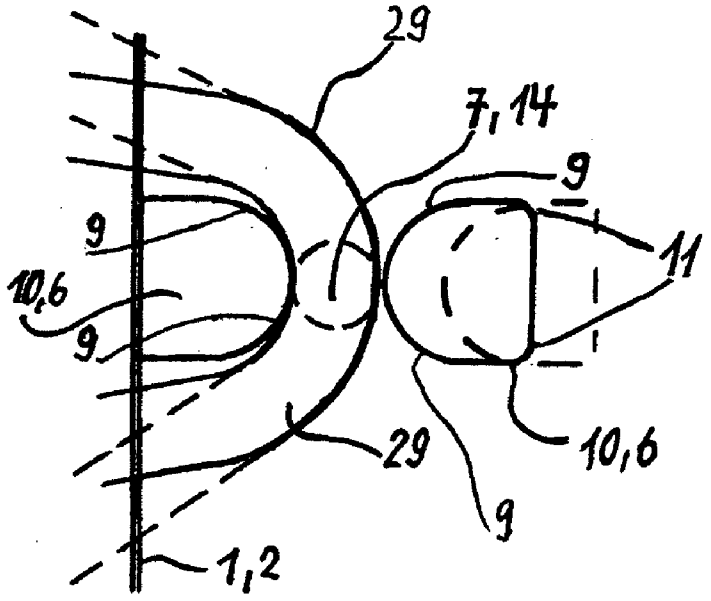

Figur 13 Figur 14 Figur 15

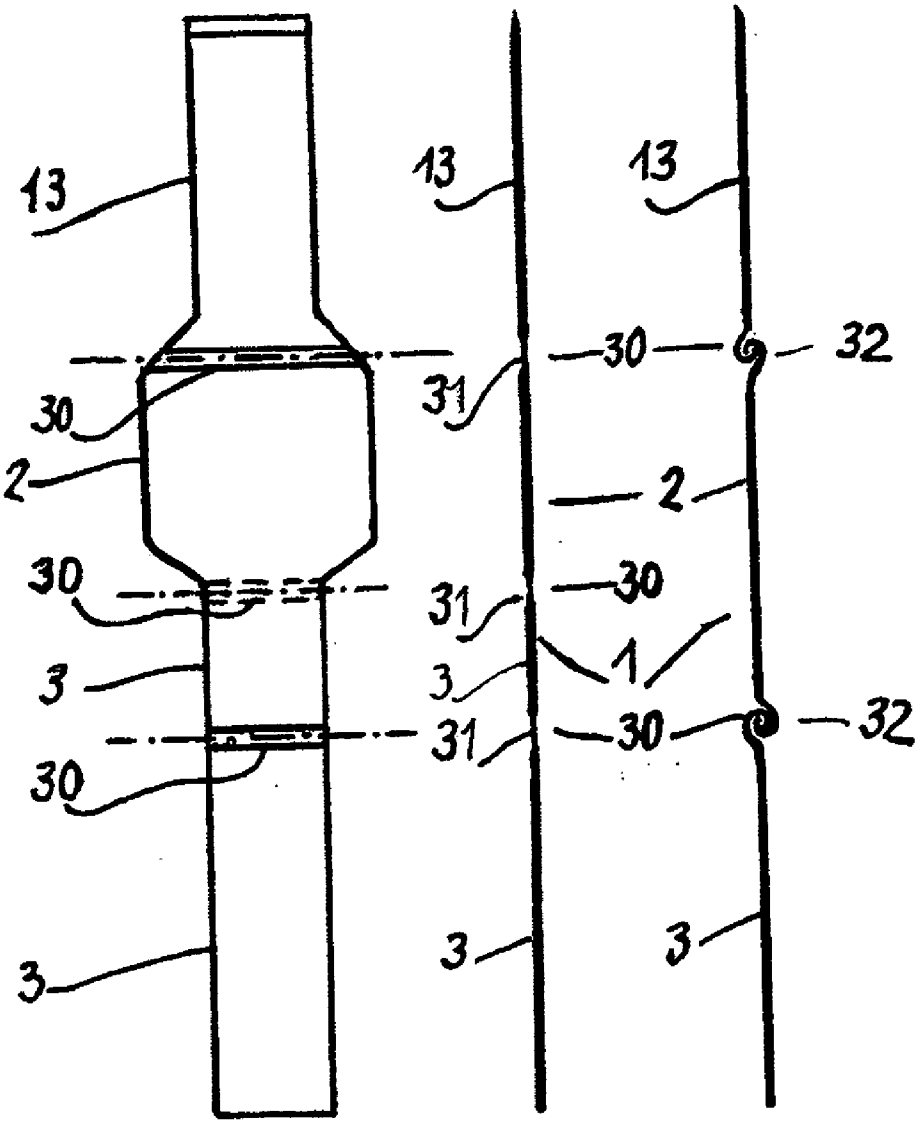

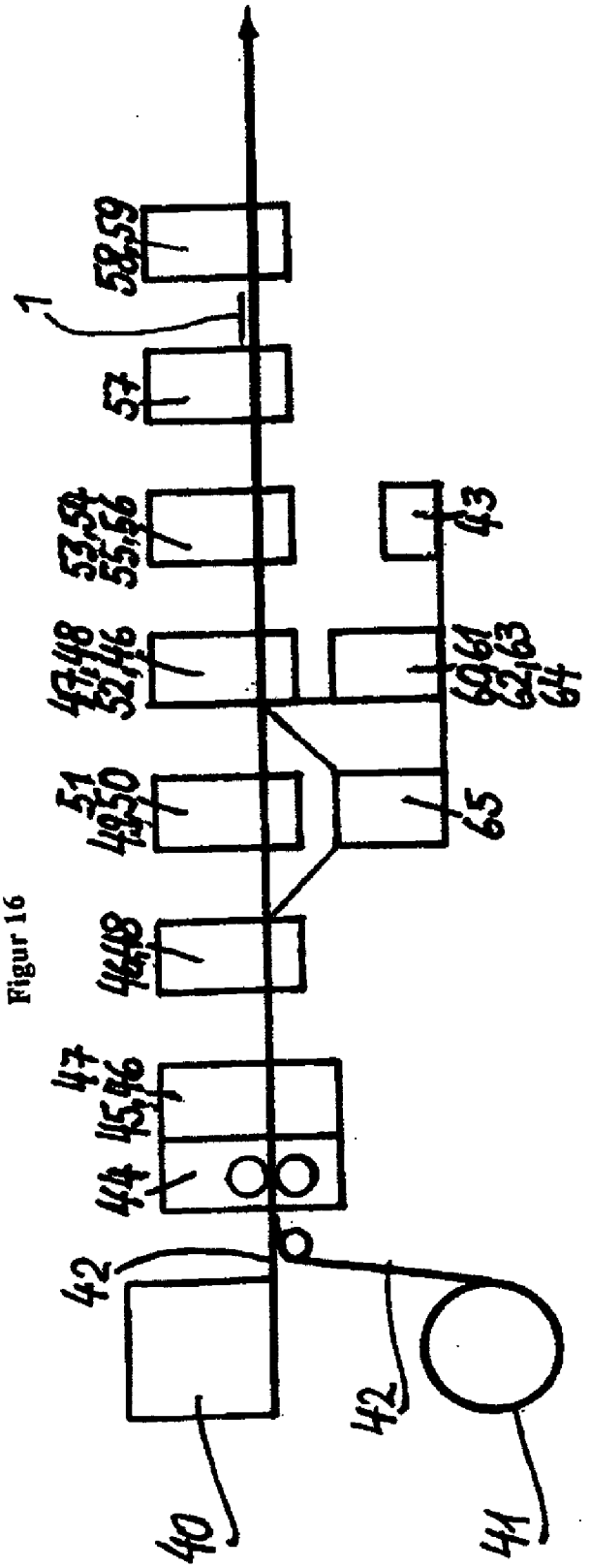
1
58,59
57
53,54
55,56
43
47,48
52,46
60,61
62,63
64
51
49,50
65
44,48
47
45,46
44
42
42
40
41

Figur 16

IMPLANT PLATE, METHOD AND FACILITY FOR THE MANUFACTURE THEREOF

[0001] The invention relates to an implant plate, and a method and a facility for semi-automatic or fully automatic manufacture of implant plates, and also to the use thereof in surgery and/or orthopedics.

[0002] The invention therefore relates to an at least one-part, internal humerus plate. In addition, the invention comprises a method for semi-automatic or fully automatic manufacture of implant plates, and a facility for performing the method, and also the use of the implant plate, as a product directly manufactured by process technology and plant engineering, in surgery and/or orthopedics. With the implant plate according to the invention, a substantially improved stabilization of a fracture of a head of an upper arm, and/or a fracture of a proximal upper arm is attained.

[0003] General prior art includes metallic implant plates having a substantially constant thickness or strength along a longitudinal and lateral cross-section. With these plates, bone fractures are fixed in position and held together with bone screws during processes of healing. From the Prospectus "PHILOS-Proximal Humerus Internal Locked System", November 00/EMA/Docseries VI, of the firms of Stratec/Mathys, a specific shoe-horn shaped implant plate for stabilizing a proximal humerus fracture is known. Drill holes are provided along the middle plate section for bone screws which are directed, on the one hand, into the upper-arm head with the spongy tubercle and, on the other hand, into the proximal shaft region of the humerus. These shoe-horn shaped implant plates are formed to be wider in the region near the head of the upper arm, and narrower in the shaft region of the humerus. The region near the head of the implant plate has at least four drill holes, and the shaft region at least three drill holes. Furthermore, the region near the head of the implant plate has at least six drill holes close to the edge for accommodating metallic wire material, or resorbable and non-resorbable thread material, for holding together the fracture parts of the head. From DE 197 50 493 A1 an implant is known for use in surgery for stabilizing a humerus-head fracture by means of a screw. Although in DE 197 50 493 A1 this implant is repeatedly also described as being a plate, the constructional configuration is substantially based on that of a massive square bar, the shaft region of which has a reduced material thickness, and the head-near region of which has, by comparison, a substantially doubled material thickness. The head-near region of the square bar is shaped to be substantially concave towards the humerus head. The fabrication of the basic spatial shape of the implant requires costly measures of processing by forging, pressing, and/or cutting operations. In the head-near region, this implant has two guides for bone screws, with which these screws are stably held at an angle to the plate for setting the fracture. Preferably, the screws are releasably fixed by means of a clamping device to prevent a rotation of the screw shaft, and a displacement along the direction of the screw shaft. Suitable for this is a special screw having a thread outer diameter that is greater than the diameter of the adjoining shaft. In order to ensure reliable guiding, the shaft diameter is enlarged in the region of the screw head. In addition, the implant has drill holes for shaft screws, which are substantially directed perpendicularly to the longitudinal axis of the rod-shaped implant. At the free upper end and between the two upper-arm head screws of the implant region, drill boles are provided to extend parallel to the upper and the lower side of the rod-shaped implant, serving to accommodate purse-string wire-sutures, and resorbable or non-resorbable sutures for resetting torn-out tubercules.

[0004] The specific shoe-horn shaped implant plate for stabilizing a fracture of an upper-arm head, as known from the Prospectus "PHILOS-Proximal Humerus Internal Locked System" November 00/EMA/Docseries VI, of the firms of Stratec/Mathys, has in the head-end portion, drill holes close to the edge for accommodating purse-string wire-sutures or resorbable or non-resorbable suture material, but nevertheless, this construction makes it difficult to thread these fastening members, and to loop them around the plate edge, so that because of the short guiding length, this suture material may become damaged, and the purse-string wire-sutures may be jammed. In both cases, the fastening member may be ruptured. Furthermore, the fastening members first prevent a large plate area from bearing against the bone surface, and then render difficult a subsequent threading operation. The square-bar shaped implant known from DE 197 50 493 A1 has two drill holes distributed on its massive, head-end portion, that extend parallel to the upper and lower end of the implant, however, this embodiment cannot be simply converted to an implant plate. The two drill holes are made possible only because the massive, head-near portion of the implant is of a material that has been adequately reinforced in comparison with that of the shaft-near portion. Furthermore, this implant is not easily usable in surgical practice, because the massive proximal upper-arm head-screws cause an additional loss of bone owing to a necessary preliminary boring operation. Furthermore, a massive embodiment of this kind is not necessary, because of the relatively small load acting on this upper extremity, and interferes with surrounding parts of soft body tissue.

[0005] The invention is based on the problem of creating an implant plate giving a substantially improved stabilization of a fracture of an upper arm and/or a fracture of a proximal upper arm. Apart from this, a method for semi-automatic or fully automatic manufacture of the implant plates, and a facility for performing the method is to be created. This invention is also intended to comprise a use of the implant plate in surgery and/or orthopedics.

[0006] This object is achieved with the subject matter of patent claim 1, the features of which define an implant plate; with the subject matter of patent claim 10, the features of which concern a method for manufacturing the implant plate of the invention; with the subject matter of patent claim 13, the features of which comprise a facility for performing the method; and with the subject matter of patent claim 14, the features of which include a use of the implant plate. The dependent claims referred back in each case further develop the design of the implant plate of the invention, further develop the technology of the method of the invention for manufacturing the implant plate, further develop the arrangement and engineering technology of the facility of the invention, and also further develop the application technology of the use, respectively.

[0007] The principle of the solution on which the invention is based consists substantially of a spoon-shaped implant plate having drill holes and/or oblong holes for bone screws being provided for stabilizing a fracture of an upper-arm head or an upper arm, the plate having at least one raised receiving member for flexible fastening members, and the receiving

member being provided on the side facing away from the bone and on the longitudinal axis at the upper edge of the spoon-shaped portion. According to one embodiment, at least one receiving member can be disposed at each longitudinal edge on the side of the implant plate facing the bone. Each receiving member has an aperture extending substantially parallel to the respective plate edge. The apertures are preferably designed to be eyelets, round hooks, or tubes, wherein slightly curved and relatively long guide paths substantially facilitate and improve an operation of threading, passing through, and drawing together the employed flexible fastening members which are wound around the fracture. The entry and exit edges of the apertures must be blunted, rounded and/or smoothed, in order that the flexible fastening members may not be damaged or destroyed. Each implant plate may have a blade disposed along the longitudinal axis, starting out from the upper edge of the spoon-shaped portion of the implant plate, the blade being driven into the humerus head in an angled state. The blade has at least one drill hole having at least one screw-thread into which an upper-arm head-screw is screwed to extend obliquely upwards from the head-end portion or head portion of the implant plate. In order to allow at least one upper-arm head-screw to be passed through the head- and shaft-end portions, the implant plate has at least one respective drill hole and/or oblong hole. The insertion of the upper-arm head-screws from the implant plate to the angled blade creates a stable angled connection, whereby the support of the blade on the humerus head and the implant plate at the upper-arm head and the proximal upper arm is improved. The receiving members disposed close to the edge on the side of the implant plate facing away from the bone, decisively improve the operations of threading, guiding and drawing together the flexible fastening member with which the fracture of the upper-arm head and/or the proximal upper arm is additionally stabilized. This constructive design of the implant plate thus ensures the operations of inserting, threading, and passing-through, and also of tightening the flexible fastening members even after the plate has been secured to the bone.

[0008] The principle of the solution in accordance with the invention also comprises a method according to which the implant plates are fabricated semi- or fully automatically, and also semi- or fully continuously, by programmed control from metallic flat-strip or strip material, consisting for example of implant steel, titanium or titanium alloys and the like. According to one embodiment, the flat strip which is kept available having the necessary measurements, either cut to length from a stacking magazine, or in the form of a coil, may be first cold-worked in order to produce, for example, naps, discontinuous grooves, and the like on the surface of the side of the implant plate intended to bear against the bone, in order that sustenance of the periosteum and the bone be maintained during subsequent use of the inserted implant plate. The flat strip may also be kept available, suitably provided with a surface profile by means of preceding hot or cold rolling, as a starting material for the method of the invention. Thereupon the flat strip is worked by machining or the like according to a previously determined configuration in order to produce apertures such as drill-holes, openings, and the like, having a relatively large diameter for the bone screws, and apertures such as drill holes, openings, and the like, having a relatively small diameter, in the receiving members that are to be formed from the flat strip material, for flexible fastening members. At the same time, or subsequently, forming-cuts such as parallel slits, oblique cuts, partial cuts and the like are made close to the edge of the flat strip, as needed for forming the receiving members, and possibly also the blade, for example by cutting, punching, laser treatment, machining, eroding and the like. Also simultaneously, or subsequently, having regard to the later use of the implant plate, the regions of the flat strip prepared for forming the receiving members close to the edge are cold-formed, i.e. deep drawn, bent, rolled, angled and the like, in the direction of the side facing away from the bone, so that the receiving members for the flexible fastening members on the side of the implant plate facing away from the bone are visibly raised, but only to a small height. The apertures such as drill holes, openings, and the like, previously formed in the receiving members, are then positioned close to the edge to be substantially parallel to the course of the plate edge, and also to the upper and lower side of the implant plate yet to be completed. Cold-forming may also be applied to forming spaced regions of weakened material extending across the longitudinal axis, for later use as strap hinges or positions of separation for producing interlocking hinges, and for sharpening the edges at the free end of the blade. Subsequently the flat strip, as prepared to this extent, may be cold-formed to a flat longitudinal channel substantially not including the blade region, in order to optimize a bearing of the implant plate, in later use, against the bone. Subsequently the implant blanks having the spoon-shaped outer contour are produced from the bowed strip material by material removal, for example by punching, laser treatment, cutting, machining, and the like, and singled at the same time.

[0009] According to an embodiment of process technology, a flat strip of a width greater than the width of the spoon-shaped portion of the implant plate is used in order to punch, cut by laser, cut, and the like, wide or narrow rectangular ridges from the excess plate-edge region. By edge-rolling these ridges in the direction of the upper side of the implant plate facing away from the bone, tubular or round-hook shaped receiving members of low height are formed for drawing-through flexible fastening members. A singling operation on the flat strip that has been prepared to this extent, to yield implant blanks, is also effected by suitable removal of material. The singled implant plate blanks are subsequently imparted with the predetermined flat channel profile by cold-working.

[0010] According to a preferred embodiment of process technology, instead of the preparatory measures of process technology for forming the receiving members from the flat strip material, externally prefabricated receiving members for the flexible fastening members, having the shape of tubular sections, round hooks, eyelets and the like of a low projecting height and an opening cross-section matched to the diameters of the flexible fastening members, may be attached to the surface of the singled implant blanks close to the edges before or after the bowing, i.e. flat-channel shaping of the blanks by cold-forming, welding, press-welding, soldering, screwing, and the like.

[0011] The implant plate blanks fitted with receiving members for flexible fastening members attain the final state of fabrication following deburring, rounding of edges, and cleaning. According to an embodiment of process technology, the implant plates may be surface-finished by galvanic, electro-chemical, or vacuum-technological methods such as

the CVD method (Chemical Vapor Deposition). The implant plates are sterilized and supplied for surgical use suitably packed.

[0012] The facility associated with the invention is of linear and modular construction, and comprises substantially program-controlled, semi or fully automatically operating and timed fabrication machines or automatic machines with which the flat strip is processed to form the receiving members for flexible fastening members, and with which the implant plate, possibly including the blade, is also made.

[0013] According to an embodiment of plant technology, the individual devices may be disposed for operative cooperation in a linear array, or opposite to each other, or in a meandering configuration, or also in a roundabout, turnstile, or double star arrangement.

[0014] In accordance with the invention, the implant plates, and also the implant plates directly produced by the method, possibly using the plant, are utilized for stabilizing fractures of an upper arm head and a proximal arm.

[0015] The invention will be described in greater detail in the drawings.

[0016] FIG. **1***a* shows a front view, with a drawn-in longitudinal sectional line A-A, of a spoon-shaped implant plate for additional stabilization of a fracture of an upper-arm head, and/or of a proximal upper arm, the implant plate having drilled holes and/or oblong holes for bone screws in a spoon- and shaft-end portion, and also ridge-shaped receiving members for flexible fastening members in a region close to the edge of the head-end portion or spoon portion of the implant plate.

[0017] FIG. **1***b* shows a side view of the arrangement of FIG. **1***a* of an implant plate on an upper-arm head and on a proximal upper arm along a longitudinal section A-A.

[0018] FIG. **1***c* shows a plan view of the implant plate.

[0019] FIG. **2** shows a magnified front and side view, and also a plan view, of the ridge-shaped receiving member of FIGS. **1***a* to **1***c*, with a sectional line B-B through the side view.

[0020] FIG. **3***a* shows a front view of a spoon-shaped implant plate with a widened head-end portion or spoon portion, and a narrower shaft-end portion or shaft portion, having distributed drill holes and/or oblong holes for bone screws and tubular-shaped receiving members for flexible fastening members in a region close to the edge of the head-end portion, and also a blade extending from the upper end of the head-end portion for additional stabilization of a fracture of an upper-arm head and a proximal upper arm.

[0021] FIG. **3***b* shows a side view of the arrangement of FIG. **3***a* of the spoon-shaped implant plate on an upper-arm head and a proximal upper arm, with a driven-in blade, and also the tubular receiving members.

[0022] FIG. **4** shows a front and side view, and also a plan view of a tubular receiving member of FIGS. **3***a* and **3***b* in a region close to the edge of the head-end portion.

[0023] FIG. **5** shows a front view of an implant plate based on FIGS. **1***a* and **3***a*, with modifiable locating positions, shown as circles, for receiving members in a region close to the edge of the head-end portion, for additional stabilization of a fracture of an upper-arm head and a proximal upper arm.

[0024] FIG. **6** shows a front and side view, and also a plan view of an eyelet-shaped receiving member, formed from a deep-drawn slit close to an edge, for a flexible fastening member, in a modification of the arrangement of FIG. **5**.

[0025] FIG. **7** shows a front and side view, and also a plan view of an eyelet-shaped receiving member, formed from a fold close to an edge, for a flexible fastening member, in a modification of the arrangement according to FIG. **5**.

[0026] FIG. **8** shows a front and side view, and also a plan view of an eyelet-shaped receiving member, formed from a deep-drawn cup close to an edge, for a flexible fastening member, in a modification of the arrangement according to FIG. **5**.

[0027] FIG. **9** shows a front and side view, and also a plan view of a receiving member, cut from excess plate material close to an edge in the form of a tab and bent to hook-shape, for a flexible fastening member, in a modification of the arrangement according to FIG. **5**.

[0028] FIG. **10** shows a front and a side view, and also a plan view of a receiving member, cut from excess plate material close to an edge in the form of a flange and bent, for a flexible fastening member, in a modification of the arrangement according to FIG. **5**.

[0029] FIG. **11** shows a front and a side view, and also a plan view of a triangular receiving member, cut obliquely from plate material close to an edge and bent at an angle, for a flexible fastening member, in a modification of the arrangement according to FIG. **5**.

[0030] FIG. **12** shows the ridge-shaped receiving member for a flexible fastening member in a magnified view of the section B-B of the side view of FIG. **2**.

[0031] FIG. **13** shows a front view of a three-part spoon-shaped implant plate having regions of weakened material or self-interlocking hinges extending across the longitudinal axis A-A between the blade, spoon and shaft portions.

[0032] FIG. **14** shows a side view of a three-part implant plate having strap hinges between the blade and the head-end portion, and also between the head-end portion and the shaft-end portion.

[0033] FIG. **15** shows a side view of a three-part implant plate having adjacent hinge-like interlocking portions between the blade and the head-end portion, and also between the head-end portion and the shaft-end portion.

[0034] FIG. **16** shows the process operation and a linear modular configuration of the facility for manufacturing the implant plates according to the invention.

[0035] Any reference numerals which have not been inserted become evident from preceding or subsequent Figures and the descriptions pertaining thereto.

[0036] The invention comprises the design of the structure of an implant plate for stabilizing a fracture of an upper-arm head and/or a fracture of a proximal upper arm, the implant plate having, in addition to drill holes for upper-arm head-screws and shaft screws, receiving members disposed close to the edge on the side of the head portion facing away from the bone, for flexible fastening members such as purse-string

wire sutures or surgical suture material. The implant plate has a substantially uniform thickness of material of about 0.5 to 6.5 cm, preferably of 0.8 to 3.5 mm. The head-end portion of the implant plate is formed to be spoon-shaped. In comparison with the head-end portion, the shaft-end portion of the implant plate is formed to be narrower, having a flat stem-shape. Furthermore, the spoon-shaped implant plate is of slightly convex curvature, and a cross-section that is slightly bowed, or of hollow-ground shape, or formed as a shallow channel-profile. The head-end portion has at least one drill hole and/or oblong hole for upper-arm head-screws. The shaft-end portion has at least one drill hole and/or oblong hole for shaft screws. In an embodiment, at least three receiving members, formed as ridges, for fastening members are provided close to the edge on the spoon-shaped portion of the implant plate to protrude from the side facing away from the bone. These eyelet-shaped receiving members facilitate rapid threading of the flexible fastening member, such as a purse-string wire suture or surgical suture material.

[0037] FIGS. **1***a*, **1***b*, and **1***c* show an implant plate **1** according to the invention, having a head-end portion **2** and a shaft-end portion **3**. The head-end portion **2** has two drill holes **5**, equally spaced from the longitudinal axis A-A of the implant plate, and two further drill holes **5**, located on the longitudinal axis A-A, for upper-arm screws. The shaft-end portion **3** has three drill holes **5**, equally spaced along the longitudinal axis A-A, for shaft screws. The head-end portion **2** has, on the surface of the implant plate **1** facing away from the bone **4**, six substantially uniformly distributed, ridge-shaped receiving members **6** having apertures **7** that are designed as drill holes **14** for not shown flexible fastening members. The apertures **7** must extend substantially parallel to the upper and lower side of the implant plate **1**, and also parallel to the outer edge or contour **8** of the head portion **2**, whereby threading and guiding of the flexible fastening members, and also looping of the flexible fastening members around, and drawing together the fracture is decisively improved. In the illustrated embodiment, the implant plate **1** is designed to be of one piece, and of slight convex curvature, in order to bear well against the upper-arm head and the proximal upper arm.

[0038] FIG. **2** shows a magnified front and side view, and also a plan view, of the receiving member **6** of FIGS. **1***a*, **1***b*, and **1**c, formed as a ridge **10**. Each ridge **10** is aligned to be substantially perpendicular to an outer edge **6** of the head-end portion **2** of the implant plate **1**, and has a drill hole **14** representing the aperture **7**. Outer edges **9** of the drill hole **14** are rounded, so that the not shown flexible fastening member may be easily threaded and guided without being damaged. The edges **11** of the ridge **10** have also been blunted or rounded, to protect tissue. In accordance with the side view, the ridge **10** is formed to be of semi-circular shape. The ridge **10** may be of semi-oval shape, square, or rectangular, the corners and edges **10** being blunted or rounded in each case, in order to protect tissue. The ridge **10** may be disposed on a plate-shaped, round, square, rectangular, triangular, or oval base **12**. The base **12** may be welded, pressure welded, soldered, or screwed onto the side of the implant plate **1** facing away from the bone **4**, at a position close to the edge. The basis **12** may also be dispensed with, so that the ridge **10** may be suitably fixed directly onto the implant plate **1**, at a predetermined location close to the edge.

[0039] FIGS. **3***a* and **3***b* illustrate a spoon-shaped implant plate **1** having a blade **13** that extends from the head-end portion **2**, and is disposed along an extension of the longitudinal axis A-A of the implant plate, and has a sharp edge at the end. Within the portion of the blade **13** lying along this longitudinal axis of the implant plate **1**, two spaced drill holes **15** having at least one cut-in thread are provided. The blade **13** can be suitably bent at an angle depending on the fracture of the upper-arm head, and driven into the upper-arm head. The head-end portion **2** of the implant plate **1** has two drill holes **5** equally spaced from the longitudinal axis A-A, and two drill holes **5** lying on the longitudinal axis A-A, for upper-arm head-screws. The shaft-end portion **3** has three drill holes **5** equally spaced from each other along the longitudinal axis, for shaft screws. The two drill holes **5** that are spaced from each other on the longitudinal axis A-A may also be designed to be oblong holes for the upper-arm head-screws. According to the illustrated embodiment, two upper-arm head-screws, in particular the two upper-arm head-screws lying on the longitudinal axis A-A, may be directed towards the two drill holes **15** of the blade **13** and screwed into the at least one thread of the drill holes **15**. This embodiment makes possible a locking of the implant plate to prevent it from moving out of the humerus head, so that a stable angular connection between the bone **4** or humerus head, the blade **13**, and the implant plate **1** is created. The combination of this with the flexible fastening members **29** passing through the receiving members **16**, and the three tubular receiving members **16** disposed close to the edge, results in the achievement of an extremely effective fracture stabilization within a substantially shortened operating time.

[0040] FIG. **4** illustrates a magnified front and side view, and also a plan view, of a tubular-shaped receiving member **16** of FIGS. **3***a* and **3***b*. A tubular-shaped receiving member **16** is disposed on the blade-side edge region of the head-end portion **2** of the implant plate **1** across the longitudinal axis A-A and parallel to the upper side of the implant plate **1**. Furthermore, a tubular-shaped receiving member **16** is disposed at each of the opposite longitudinal edges **17** of the head-end portion **2** to be close to the edge and also substantially parallel to the longitudinal edge **17** and parallel to the upper side of the implant plate **1**. The edges of the exits **18** of the tubular receiving members **16** are rounded. The exits **18** of the tubular receiving members **16** are directed towards the associated outer edge or contour **8** of the implant plate **1**.

[0041] FIG. **5** illustrates the head-end portion **2** of the implant plate **1** with the blade **13**, and the shaft-end portion **3**, both being shown only with broken lines. In the region of the outer edge or contour **8** of the head-end portion **2**, variable locating positions **19**, indicated by means of circular broken lines, for further embodiments of receiving members **6** for flexible fastening members **29** are provided.

[0042] FIG. **6** illustrates a front- and side view, and also a plan view, of a receiving member **20** having an eyelet-shaped aperture **7** for flexible fastening members **29**, as usable with the locating possibilities **19** of FIG. **5**. This receiving member, having an eyelet-shaped aperture **7**, has been produced by deep drawing from a parallel slit **21** close to the edge of the implant plate **1**. All edges intended to contact the flexible fastening member **29** and the tissue have been rounded.

[0043] FIG. **7** illustrates a front and side view, and also a plan view, of a further receiving member **20** having an eyelet-shaped aperture **7** for flexible fastening members **29**, as usable with the locating possibilities **19** of FIG. **5**. This eyelet-

shaped aperture **7** of the receiving member **20** has been produced by deep drawing a region close to the edge of the implant plate **1** to a fold **22**, and by providing a through drill hole **23**. All edges intended to contact the flexible fastening member **29** and the tissue have been rounded.

[**0044**] FIG. **8** illustrates a front and side view, and also a plan view, of a further receiving member **20** having an eyelet-shaped aperture **7** for flexible fastening members **29**, as usable with the locating possibilities **19** of FIG. **5**. This receiving member **20** with the eyelet-shaped aperture **7** has been produced by deep drawing a region close to the edge of the implant plate **1** to a cup **24**, and by providing a through drill hole **23**.

[**0045**] FIG. **9** illustrates a front and side view, and also a plan view, of a round-hook shaped receiving member **25** for flexible fastening members **29**, as usable with the locating possibilities **19** of FIG. **5**. This round-hook shaped receiving member **25** has been produced by punching a narrow strip-shaped extension **26** from an excess edge region of the implant plate **1**, and subsequently edge-rolling the free end of the extension **26** to a round hook **25**. All edges intended to contact the flexible fastening member **29** and the tissue have been rounded.

[**0046**] FIG. **10** illustrates a front and side view, and also a plan view, of another tubular receiving member **16** for flexible fastening members **29**, as usable with the locating possibilities **19** of FIG. **5**. This tubular receiving member **16** has been produced by punching a wide rectangular extension **26** from an excess edge region of the implant plate **1**, and subsequently edge-rolling the free end of the extension **26** to a tubular receiving member **16**. All edges intended to contact the flexible fastening member **29** and the tissue have been rounded.

[**0047**] FIG. **11** illustrates a front and side view, and also a plan view, of a triangle-shaped receiving member **27** provided with a drill hole **27** and formed by means of an oblique cut **28** close to the edge in the strip material **42**, and subsequently bending-away material substantially vertically from the upper side of the implant plate **1**. All edges intended to contact the flexible fastening member **29** and the tissue have been rounded.

[**0048**] FIG. **12** shows a magnified view of the ridge **10** along the sectional line B-B of the side view of FIG. **2**. According to this, the aperture **7**, or the drill hole **14**, is occupied by a flexible fastening member **29**. The drill hole **14** may be conformed to the diameter of the flexible fastening member **29**, but may also be larger in order to facilitate threading, and possibly multiple threading-through of the flexible fastening member **29**.

[**0049**] All edges **8**, **9** of the implant plate **1** based on embodiments of the invention, which may contact the flexible fastening member **29** and the tissue, have been blunted, rounded, and/or smoothed.

[**0050**] FIG. **13** illustrates a front view of a three-part, spoon-shaped implant plate **1** having at least two regions **30** of weakened material extending across the longitudinal axis A-A between the head-, shaft-, and blade portions **2**, **3**, **13**. During surgical application of the implant plate **1**, the two regions **30** of weakened material are used as strap hinges **31** or positions of separation for producing interlocking hinges **32**.

[**0051**] FIG. **14** illustrates a side view of three regions **30** of weakened material of the implant plate **1**, which can be used during later surgical application as strap hinges **31** to improve fitting to the shape of the upper-arm head and proximal upper arm, because the desired angling of the head- and blade-portions may be achieved in this manner.

[**0052**] FIG. **15** illustrates a side view of two regions **30** of weakened material of the implant plate **1**, which can be used during later surgical application as self-interlocking hinges **32** to improve fitting to the shape of the upper-arm head and proximal upper arm, because the desired angling of the head- and blade-portions may be achieved also with this embodiment.

[**0053**] The implant plate **1** according to the invention may be designed to consist of only two parts by omitting the blade **13**, wherein the region **30** of weakened material between the head-portion **2** and the shaft-portion **3** is utilized as a strap hinge **31** or a self-interlocking hinge **32** for angling and fitting to the bone **4**. With the three-part embodiment of the implant plate **1**, the regions **30** of weakened material may be used in combination as a strap hinge **31** and a self-interlocking hinge **32**.

[**0054**] FIG. **16** illustrates the method as applied in a facility for manufacturing the implant plates **1**. According to this, the method comprises a semi or fully automatic manufacture of implant plates **1** that are used for stabilizing a fracture of an upper-arm head and/or a fracture of a proximal upper arm. For this, a metallic strip-material **42** that is compatible with the human body, and that is available cut to length and stapled in a magazine or store **40**, or as a coil **41**, and that consists, for example, of implant steel, titanium, or titanium alloys, is used as a starting material for the implant plate **1**. The strip material **42** is of a substantially uniform thickness of 0.5 to 6.5 mm. The strip width is governed by the respective maximum width of the head-end portion **2** of the spoon-shaped implant plate **1**. The width may also be greater for the purpose of forming receiving members **6** from the strip material **42**. Apart from this, the strip widths to be employed are determined by the use of the implant plates **1** for adults, young persons, or children.

[**0055**] In accordance with one embodiment, the strip material **42** that is available from the magazine **40** or from the uncoiling device **43** may be passed through a rolling mill **44** provided with a drilling machine **45** and/or a laser device **46** under computer control and timing. The surface of a roll of the rolling mill **44** may be profiled and may produce a nap profile, or discontinuous groove- or diamond-shaped profiles, and the like, on that side of the strip material **42** of the implant plate **1** being manufactured that will later face the bone. The drilling machine **45** and/or the laser device **46** produce the necessary drill holes or holes **14**, **23** that form the apertures **7** in the receiving members **6** for the flexible fastening members **29**. The strip material **42** is then processed in a punching device **47** that may be combined with the laser device **46** and/or a cutting device **48**. Parallel slits **21**, extensions, or strips **26** close to the edge, and the like, for example, are produced in these devices under program control. Subsequently the strip material **42** is processed under computer control and timing in a deep-drawing device **49** that may be combined with a bending device **50** and/or edge-rolling device **51**, in order to form eyelets from parallel slits **21** or cups **24**, or to form folds **22** from plate regions close to the edge, or to bend oblique cuts **28** located close to the edge at an angle, or to coil-inwards strips **26** of excess material. Under computer control, the spoon-shaped final configuration is

then produced, and the singling of the strip material **42** to implant plate blanks **1** is performed in a separating device **52**, for which purpose use may be made of the laser device **46**, the punching device **47**, and/or the cutting device **48**. In order to achieve an improved bearing of the implant plate **1** against the bone **4**, the strip material **42** may be cold-formed to a flat channel-profile in a cold-drawing device **65** before or after the singling operation in which implant plate blanks are produced. For this, it is also possible to use the rolling mill **44** with suitable conversion, by reversing the implant plate blanks **1**. Subsequently, the implant plates **1** are supplied to a deburring device **53** combined with a shot-blasting device **54**, rounding device **55**, and cleaning device **56**. Then the implant plates **1** may be surface-finished in a coating device **57**. The finishing of the implant plate **1** may be performed using galvanic, electro-chemical, or vacuum-technological coating techniques. Vacuum technological coating comprises chiefly CVD technology (chemical vapor deposition). Finally, the implant plates **1** are prepared for dispatch in a sterilizer **58** in association with packing devices **59**, and sent-out for distribution.

[**0056**] The facility provided by the invention is of modular construction and comprises substantially the following devices, in particular, program-controlled, semi or fully automatically operated and timed manufacturing machines for performing the preparation of the metallic strip material **42**, and for forming the receiving members **6** for flexible fastening members **29**, and also the final configuration of the implant plates **1**, possibly fitted with blades **13**:

[**0057**] (a) at least one stacking magazine **40**, and/or at least one uncoiling device **41**, possibly with a deflection roller, for holding available and supplying the metallic strip material **42**,

[**0058**] (b) if required, a rolling mill **44** for at least one-sided surface profiling of the strip material **42**, e.g. for producing naps, discontinuous groove-shaped or diamond-shaped profiles, and the like, on the side facing the bone **4**,

[**0059**] (c) if required, a drilling, laser-treatment, and/or punching device **45**, **46**, **47**, in particular, a suitable automatic machine for producing apertures **7**, positioned holes, or drill holes **23**, and the like;

[**0060**] (d) if required, a laser-treatment, punching, and/or cutting device **46**, **47**, **48**, in particular, a suitable automatic machine for preparing the strip material **42** for forming raised receiving members **6** on the side of the implant plate **1** facing away from the bone, and also, if required, a blade **13** extending from the spoon-shaped portion **2** of the implant plate blank **1**;

[**0061**] (e) if required, deep drawing, bending, and edge-rolling devices **49**, **50**, **51**, in particular, a suitable automatic machine for shaping the raised receiving members **6** on the side of the implant plate blank facing away from the bone **4**, and also, if required, U, T, or I shaped profiles on the blade **13** by cold-forming;

[**0062**] (f) if required, further laser-treatment, punching, and/or cutting devices **46**, **47**, **48**, in particular, a suitable automatic machine for producing an outer contour **8** and singling implant plate blanks **1**;

[**0063**] (g) if required, at least one small-parts stocking device **43** for externally manufactured eyelets, hooks, or tubular sections;

[**0064**] (h) if required, welding, pressure welding, soldering, screwing, and/or riveting devices **60**, **61**, **62**, **63**, **64**, in particular, a suitable automatic machine for attaching externally manufactured receiving members **6** for flexible fastening members **29** onto the side of the implant plate blank **1** facing away from the bone **4**;

[**0065**] (i) if required, a cold drawing device **65**, in particular, a suitable automatic machine for producing weakened material regions **30** extending across the longitudinal axis, and sharpening the free end of the blade **13**, and also forming the strip material **42** to a shallow channel-shaped profile, substantially no longer extending to include the width of the blade **13**;

[**0066**] j) burr removing, rounding, blasting, and/or cleaning devices **53**, **54**, **55**, **56**, in particular, a suitable automatic machine for removing sharp edge regions **8**, **9**, **11** from the implant plates **1**;

[**0067**] (k) if required, a coating device **57** for surface finishing, in particular, galvanic, electro-chemical, and vacuum-technological coating devices; and also

[**0068**] (l) a sterilizer **58** and/or sterile packing device **59**, in particular, a suitable automatic machine.

[**0069**] According to the illustrated embodiment of plant technology, the individual devices are disposed in a linear array. The devices of the plant may also be disposed in rows opposite to each other, or displaced with respect to each other in a meandering configuration. Finally, the plant may be built-up in a roundabout, turnstile, or double-star arrangement, wherein the individual devices operationally cooperate. Automatic machines having multiple functions may be applied repeatedly, making use of process and plant technology, if necessary after any needed operational conversion, so that the technical outlay of plant and devices for performing the individual method steps may be reduced by reversing the strip material **42** or the implant plate blanks **1**.

[**0070**] According to another embodiment, the individual portions **30** of weakened material of the implant plate **1** may be utilized as strap hinges **31**. The fabrication by means of process and plant technology is effected preferably in a separate cold-drawing device **65**. The rolling mill **44** too may be used for cold-drawing the strip material **42** by suitable conversion, in order to produce regions **30** of weakened material in the strip material **42** under program control.

[**0071**] The manufacture of the two- or three-part implant plates **1** is performed in such manner that the strip material **42** is separated into the blade-, head- and/or shaft-end portions **2**, **3**, **13** by punching or laser-treatment. The adjacent edges of the singled portions **2**, **3**, **13** are formed to be self-interlocking hinges, and are connected together to be movable within limits by being fitted into each other.

[**0072**] In this manner an economical manufacture of the implant plates **1** is rendered possible by fabrication technology.

[**0073**] The invention also comprises the use of the implant plates **1** for stabilizing fractures of an upper-arm head and/or a proximal upper arm, wherein a setting of a fracture is effected by means of the implant plate **1**, the head and shaft screws, and also the flexible fastening members **29** that are wound around the fractured parts, in particular the tubercle, and are used together with the receiving members **6** disposed

close to the edge on the upper side of the implant plate **1**. In accordance with the invention, the apertures **7** of the receiving members **6** extend substantially parallel to the outer contour **8** of the head portion **2**.

[**0074**] Considerable surgical advantages are achieved with the invention. With the receiving members **6**, it makes possible a substantially more easy and rapid threading, passing through, and also drawing-together of the flexible fastening members **29** that comprise purse-string wire-sutures or surgical suture material. With this solution, as provided by the design, substantially better setting of a fracture, and more careful treatment of bone substance is achieved. In addition, the duration of an operation is substantially shortened. Thereby a patient is relieved from physiological strain, because a use of narcotics and a loss of blood are reduced.

1. Implant plate, having drill holes for bone screws, for stabilizing a fracture of an upper-arm head and/or a fracture of a proximal upper arm, characterized in that

a spoon-shaped implant plate (**1**) comprises a head-end portion (**2**) and a shaft-end portion (**3**), each having at least one drill hole (**5**) and/or an oblong hole (**5**);

at least one raised receiving member (**6**) for a flexible fastening member (**29**) is disposed at an outer edge or contour of a side of the head-end portion (**2**) of the implant plate (**1**) that faces away from a bone (**4**);

each receiving member (**6**) has an aperture (**7**) extending substantially parallel to an outer edge or contour (**8**), and to the side of the head-end portion (**2**) of the implant plate (**1**) that faces away from the bone (**4**), for threading, passing-through, and drawing together the flexible fastening member (**29**).

2. Implant plate according to claim 1, characterized in that

an outer edge (**9**) of the aperture (**7**) in the receiving member (**6**) for the flexible fastening member (**29**) has been blunted, rounded, and/or smoothed on an entry and exit side.

3. Implant plate according to claims **1** and **2**, characterized in that

a thickness of material of the implant plate (**1**) including the head-end portion (**2**) and the shaft-end portion (**3**) is substantially uniform;

the head-end portion (**2**) of the implant plate (**1**) is widened to be of spoon-shape, and the shaft-end portion (**3**) is designed to be comparatively narrower; and

all receiving members (**6**) for the flexible fastening member (**29**) are spaced along an outer edge or contour (**8**) of the head-end portion (**2**).

4. Implant plate according to claims 1 to 3, characterized in that

the aperture (**7**) of the receiving member (**6**) is designed to be a drill hole or an eyelet, or of tubular shape, or shaped as a round hook.

5. Implant plate according to claims 1 to 4, characterized in that

the receiving members (**6**) are made from strip material (**42**) by laser-treatment, punching, cutting, deep drawing, bending and edge-rolling; and

the apertures (**7**) are made by drilling, punching, laser-treatment, deep drawing, or bending and edge-rolling.

6. Implant plate according to claims 1 to 5, characterized in that

the receiving members (**6**) consist of externally prefabricated ridges (**10**) with drill holes (**14**), tubular receiving members (**16**), or round hooks (**25**), with or without a base (**12**); and

the receiving members (**6**) are welded, pressure-welded, soldered, screwed, or riveted onto predetermined locating positions (**19**) close to an edge of the strip material (**42**).

7. Implant plate according to claims 1 to 6, characterized in that

all edges and rims (**8**, **9**, **11**) intended to contact the flexible fastening member (**29**) and human tissue have been blunted, rounded, and/or smoothed.

8. Implant plate according to claims 1 to 7, characterized in that

the head-end portion (**2**) of the implant plate (**1**) has a blade (**13**) disposed along an extension of a longitudinal axis (A-A), the blade having a sharp edge at one end.

9. Implant plate according to claim 8, characterized in that

the blade (**13**) has at least one drill hole (**15**), having at least one screw thread into which upper-arm head-screws extending from the head-end portion (**2**) or head portion (**2**) of the implant plate (**1**) may be screwed.

10. Method for manufacturing implant plates, characterized in that

a spoon-shaped implant plate that is provided with drill holes and/or oblong holes for bone screws is fitted with at least one receiving member for a flexible fastening member on a side of an implant plate facing away from a bone; and

the receiving member is provided with an aperture extending substantially parallel to an upper and a lower side, and also parallel to an outer edge or contour, of the implant plate.

11. Method according to claim 10, characterized in that

a metallic strip material that is compatible with a the human body, such as implant steel, titanium, or titanium alloys, is made available, cut to length or as a coil;

the strip material is processed by program control, semi or completely automatically in a drilling, laser-treatment, and/or punching device, to produce necessary apertures of relatively large diameter for bone screws;

the strip material is simultaneously or subsequently processed in a drilling, laser-treatment, and/or punching device, to produce necessary apertures of relatively small diameter for flexible fastening members;

simultaneously or subsequently, forming-cuts such as parallel cuts, oblique cuts, partial cutouts, and the like, as needed for forming the receiving members, and possibly also the blade, are made close to an edge in a punching, laser-treatment, or cutting device, and the like;

regions of the strip material, prepared for forming the receiving members close to the edge, are deep drawn,

bent, edge-rolled, angled, and the like in a direction of the side of the implant plate facing away from the bone;

the apertures of the receiving members, formed by drilling, punching, laser-treatment, deep drawing, bending, edge-rolling, angling off, and the like, are disposed to extend substantially parallel to an upper and lower side, and also parallel to an outer edge or contour of the implant plate; and

all edges and rims of the implant plate are blunted, and/or rounded, and also smoothed.

12. Method according to claims **10** and **11**, characterized in that

a spoon-shaped implant plate, provided with drill holes for bone screws, is provided with at least one externally formed receiving member having an incorporated aperture for a flexible fastening member on the side of the implant plate facing away from the bone; and

the aperture in the receiving member is disposed to be substantially parallel to the upper and lower side, and also parallel to the outer edge or contour of the implant plate.

13. Facility for manufacturing implant plates according to claims 9 to 11, characterized by using

(a) at least one stacking magazine (**40**), at least one uncoiling device (**41**) for holding available and supplying metallic strip material (**42**),

(b) if required, a rolling mill (**44**) for at least one-sided surface profiling of the strip material (**42**), e.g. for producing naps, discontinuous groove-shaped or diamond-shaped profiles, and the like, on the side facing a bone (**4**),

(c) if required, a drilling, laser-treatment, and/or punching device (**45**, **46**, **47**), in particular, a suitable automatic machine for producing apertures (**7**), positioned holes, or drill holes (**14**, **23**), and the like;

(d) if required, a laser-treatment, punching, and/or cutting device (**46**, **47**, **48**), in particular, a suitable automatic machine for preparing the strip material (**42**) for forming raised receiving members (**6**) on a side of the implant plate (**1**) facing away from the bone, and also, if required, a blade (**13**) extending from a spoon-shaped portion (**2**) of an implant plate blank (**1**);

(e) if required, deep drawing, bending, and edge-rolling devices (**49**, **50**, **51**), in particular, a suitable automatic machine for shaping the raised receiving members (**6**) on a side of the implant plate blank facing away from the bone (**4**), and also, if required, U, T, or I shaped profiles on the blade (**13**) by cold-forming;

(f) if required, further laser-treatment, punching, and/or cutting devices (**46**, **47**, **48**), in particular, a suitable automatic machine for producing an outer contour (**8**) and singling implant plate blanks (**1**);

(g) if required, at least one small-parts stocking device (**43**) for externally manufactured eyelets, hooks, or tubular sections;

(h) if required, welding, pressure welding, soldering, screwing, and/or riveting devices (**60**, **61**, **62**, **63**, **64**), in particular, a suitable automatic machine for attaching externally manufactured receiving members (**6**) for flexible fastening members (**29**) onto the side of the implant plate blank (**1**) facing away from the bone (**4**);

(i) if required, a cold drawing device (**65**), in particular, a suitable automatic machine for producing weakened material regions (**30**) extending across a longitudinal axis, and sharpening a free end of the blade (**13**), and also forming the strip material (**42**) to a shallow channel-shaped profile, substantially no longer extending to include the width of the blade (**13**);

(j) burr removing, rounding, blasting, and/or cleaning devices (**53**, **54**, **55**, **56**), in particular, a suitable automatic machine for removing sharp edge regions (**8**, **9**, **11**) from the implant plates (**1**);

(k) if required, a coating device (**57**) for surface finishing, in particular, galvanic, electro-chemical, and vacuum-technological coating devices; and also

(l) a sterilizer (**58**) and/or sterile packing device (**59**), in particular, a suitable automatic machine.

14. Use of the implant plate (**1**) according to claims 1 to 9, and also of implant plates (**1**) directly produced by process and/or plant technology according to claims 10 to 13 from metallic strip material (**42**) consisting of implant steel, titanium, or titanium alloys, in surgery and/or orthopedics for stabilizing a fracture of an upper-arm head and/or a fracture of a proximal upper arm.

* * * * *