(12) INTERNATIONAL APPLICATION PUBLISHED UNDER THE PATENT COOPERATION TREATY (PCT)

(19) World Intellectual Property Organization
International Bureau

(43) International Publication Date
09 November 2023 (09.11.2023)

WIPO | PCT

(10) International Publication Number
WO 2023/214403 A1

(51) International Patent Classification:
A47F 5/11 (2006.01) *A47F 5/10* (2006.01)
A47F 5/00 (2006.01) *A47F 3/00* (2006.01)

(21) International Application Number:
PCT/IL2023/050441

(22) International Filing Date:
01 May 2023 (01.05.2023)

(25) Filing Language: English

(26) Publication Language: English

(30) Priority Data:
292710 02 May 2022 (02.05.2022) IL

(72) Inventor; and
(71) Applicant: **SITTON, Oren** [IL/IL]; 10 Sitvanit St., 7406810 Ness Ziona (IL).

(74) Agent: **KLING, Asa**; c/o Naschitz Brandes Amir & CO., 5 Tuval St., 6789717 Tel Aviv (IL).

(81) Designated States *(unless otherwise indicated, for every kind of national protection available)*: AE, AG, AL, AM, AO, AT, AU, AZ, BA, BB, BG, BH, BN, BR, BW, BY, BZ, CA, CH, CL, CN, CO, CR, CU, CV, CZ, DE, DJ, DK, DM, DO, DZ, EC, EE, EG, ES, FI, GB, GD, GE, GH, GM, GT, HN, HR, HU, ID, IL, IN, IQ, IR, IS, IT, JM, JO, JP, KE, KG, KH, KN, KP, KR, KW, KZ, LA, LC, LK, LR, LS, LU, LY, MA, MD, MG, MK, MN, MU, MW, MX, MY, MZ, NA, NG, NI, NO, NZ, OM, PA, PE, PG, PH, PL, PT, QA, RO, RS, RU, RW, SA, SC, SD, SE, SG, SK, SL, ST, SV, SY, TH, TJ, TM, TN, TR, TT, TZ, UA, UG, US, UZ, VC, VN, WS, ZA, ZM, ZW.

(84) Designated States *(unless otherwise indicated, for every kind of regional protection available)*: ARIPO (BW, CV, GH, GM, KE, LR, LS, MW, MZ, NA, RW, SC, SD, SL, ST, SZ, TZ, UG, ZM, ZW), Eurasian (AM, AZ, BY, KG, KZ, RU, TJ, TM), European (AL, AT, BE, BG, CH, CY, CZ, DE, DK, EE, ES, FI, FR, GB, GR, HR, HU, IE, IS, IT, LT, LU, LV, MC, ME, MK, MT, NL, NO, PL, PT, RO, RS, SE, SI, SK, SM, TR), OAPI (BF, BJ, CF, CG, CI, CM, GA, GN, GQ, GW, KM, ML, MR, NE, SN, TD, TG).

Declarations under Rule 4.17:
— *of inventorship (Rule 4.17(iv))*

Published:
— *with international search report (Art. 21(3))*

(54) **Title:** DEPLOYABLE STAND

(57) **Abstract:** A deployable stand that may deployed in a single pull to a fixed and locked erect position. The stand comprises one or more floors, where every floor comprises a shelf, supports attached to the bottom of the shelf, a back attached to the bottom of the shelf and adjacent to and positioned 90° relative to the supports and between said supports, and locking and fixing means attached to the supports and back, where the supports are foldable over the shelf and deployable vertically relative to the shelf, where the back is foldable over or outside the shelf between the supports around cutting lines at its edges, where the locking and fixing means on the supports and back connect with each other in a deployed state of said stand.

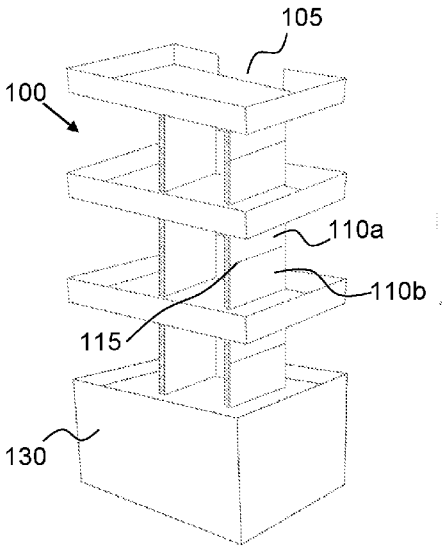

Fig. 1A

WO 2023/214403 A1

Deployable Stand

Technical Field

The present invention pertains to a deployable stand and more particularly to a multi-self stand that can be deployed and locked in a firm position in a single pull.

Background

Single or multi –shelf stands are used mostly in exhibitions and display of merchandise in stores. They should be sufficiently strong to carry the load of the articles placed on the shelves, but at the same time be foldable so that they do not occupy a substantial volume before use. However, the deployment of such stands should not involve great labor and complexity. For example, the parts of a stand should be connected to each other with different connecting means such as hinges, screws, adhesives and so on to provide it the required rigidity to carry loads adapted to its capacity. These means are not integrated into the parts of the stand and need to be connected when erecting it.

US 2015/0313355 describes a supporting stand, which is made from a single two dimensional board with folding lines that make the three dimensional stand when folding the board parts around them. The board cannot self-deploy but requires manual handling to fold the board parts over themselves along the folding lines and construct the stand to a fully erect state. Furthermore, the fasteners do not engage by themselves when deploying the stand, but also need to be manually connected to each other. In addition, the deployment of the stand is reversible, which requires manually disengaging the fasteners from each other and unfolding the stand parts to return it to its two dimensional board state.

US 2006/118460 describes a container that vertically deploys with a plurality of trays serially connected to each other with supports pivotally attached to them. The trays deploy in an inclined position with an acute angle, preferably 30°. In addition, the trays are inclined in alternating opposite directions. The inclination and alternating directions of the trays are intentional to efficiently use the display of merchandise on them from opposite sides. The trays interface and are connected to each other at their edges in the deployed state. This enables the inclined position of the trays, which edges

are attached to each other and pulled away from each other with telescopic supports in an alternating fashion. This structure cannot allow a horizontal orientation of the shelves relative each other in the deployed state. In addition, the locking means are only manually engaged and not simultaneously when deploying the container.

EP 0 663 170 describes a vertically deployable and collapsible display rack with a support between neighbor trays that consists of foldable and expandable movable side flaps, which are attached at one end to one of the trays and are free at their opposite end. This support does not extend beyond its location between adjacent trays and does not make a continuous single unit with supports between adjacent trays above or below the trays to which it is connected. Unlike the supports in the supports in the stand of the present invention, it has to have free ends and a continuous attachment to the length of the shelves in an alternating mode to enable the folding and deployment of the rack.

NL 2022802 describes a display that may be made of a single board, which is cut out to fold upon itself and connect and interlock with each of its parts to make trays and their supports. This stand is not deployable vertically or horizontally but instead is constructed from flat two dimensional boards that form its three dimensional erected state upon folding them on themselves. The stability of this stand relies on the continuous boards it is made of, the interlocking of the board parts that make it and the 'Y' shape of its supports that hold the trays in firm position. Deploying and folding this display requires manual labor and not a single pull as in the stand of the present invention. Its folding lines cannot be cut too deeply into the board, or this will weaken the strength and stability of the display when in erect three dimensional position.

EP 2 705 778 describes a horizontally collapsible and deployable shelving unit with a back wall and two side walls. The side walls are hingeably connected to the back wall and the shelves are hingeably connected to the back wall. This shelving unit is transversely foldable with the side walls folding over the back wall. This requires that the shelves also fold over the back wall, which is a necessary and not supplemental part, to allow the side walls fold over them and the back wall and maintain a two dimensional state. The solution is with the gussets, hingeably connected to the shelves and side walls so that the shelves are forced to fold over the back wall, when the side walls are folded over them and the back wall.

2014/4014606 also describes a horizontally fold-out shelving unit with a rear panel, namely a back board, which is a necessary and not supplemental part, side panels that are movable between folded and deployed positions and shelf panels connected to the side and rear panels. A support panel and side connection panels and fins extend from the shelf panel to connect it to the side panels and allow the shelves to fold when folding the side panels over the rear panel and expand when deploying the side panels away from the rear panel. Elastic members join the two opposite ends of the shelf panel and prevent over-expansion and detachment of the shelf panel parts. This design requires that the side and rear panels are maintained integral without folding or cutting lines along their width except for the folding lines along their length at the interface between the side panels and rear panel. Folding or cutting lines transversely oriented in these side and rear panels will destabilize the entire shelving unit in its deployed state. This is because they will only weaken and prevent them from forming a structure that stably holds the shelf panels and items placed on them.

There is, therefore, a need for a foldable stand that saves labor and complexity in deploying it.

It is, therefore, an object of the present invention to provide an easily deployable stand that saves labor in deploying it onsite.

It is yet another object of the present invention to provide a deployable stand with integrated means for fixing and locking the stand in a deployed state.

It is yet another object of the present invention to provide a deployable stand with integrated fixing and locking means that is sufficiently rigid and strong to carry high loads such as articles in exhibitions or merchandise in stores.

This and other objects and embodiments of the invention will become apparent as the description proceeds.

Summary

In one aspect the present invention pertains to a stand that is provided in a folded state and configured to be deployed and fixed in its position in a single pull. This deployable stand imparts many advantages. Such advantages include delivery in a convenient folded state before deploying it onsite. Another advantage is the combination of a structure and locking and fixing mechanism that enables to deploy it in a single pull without significant efforts.

In a particular embodiment, the deployable stand of the present invention comprises one or more floors, wherein every floor comprises a shelf, supports attached to the bottom of the shelf, a back attached to the bottom of the shelf and adjacent to and positioned 90° relative to the supports and between said supports, and a locking and fixing means attached to the supports and back. Further, the supports are foldable over the shelf and deployable vertically relative to the shelf. The back is foldable over or outside the shelf between the supports and around cutting lines at its edges. And the locking and fixing means on the supports and back connect with each other upon unfolding the stand to its deployed state, thereby locking and fixing the stand in its erect position.

The folding and unfolding of the stand, particularly its supports and backs, is made around cutting lines at their edges and/or middle. In particular, the cutting lines alternate between cutting from the internal surfaces of the supports that face each other towards their external surfaces opposite the internal surfaces and cutting from these external surfaces towards the internal surfaces. The same is for the backs. These alternating cuts are continuous along the height of the supports and backs regardless of the number of floors they stretch through, thus making a single continuous structure that may be pulled to a fully deployed position in a single pull.

To fix the stand in an erect, deployed position is made locking and fixing means that are attached to adjacent supports and backs and are locked to each other when the stand reaches a fully deployed state. In general, the stand of the present invention comprises three major characteristics that impart it its advantages: A structure that is continuous with cutting lines that enable it to fold and unfold and at the same time define its floors; Locking and fixing means that is already built-in the stand as a complete package and locks and fixes the stand in its deployed state; And multi-layer boards with

skin covers that are sufficiently elastic to make the cutting lines as axes for folding and unfolding the supports and backs.

The most general structure of the deployable stand comprises one or more floors, every floor comprises a shelf, supports attached to bottom of the shelf, and locking and fixing means attached to the supports. These supports are foldable over the shelf and deployable vertically relative the shelf. The locking and fixing means are configured to connect with each other in a deployed state of the stand and fix and lock the stand in a fully erect position.

Cutting lines in the middle and edges of supports and backs make the folding axes of the stand. For parallel supports in any floor of the stand, these cutting lines may be selected from cutting in directions opposite each other, cutting in directions towards each other, and cutting in a same direction.

The deployable stand may take several configurations depending on the formation of its supports. In one configuration, parallel supports are located any distance length from each other that ranges between length of the shelf and a length sufficient to fix the locking and fixing means to the supports. In particular, the distance length equals the length of the shelf, the parallel supports are aligned and integrated with the sides of the shelf and form a continuous single board. In another configuration, the distance length between every two parallel supports in a floor is sufficiently small to create a T-shape by these parallel supports and a back.

In still another configuration, every two supports comprise slits in their middle from top to a selected depth, so that they cross each other and are inserted one into the other inside said slits. This configuration makes a cross over which the shelf is attached and fixed, where the crossing point of the two supports attach to center of the bottom of the shelf. Further, the cutting lines that make the axes of folding and unfolding of the supports in their middle and edges alternate between two options: cutting from a first surface of one support that faces the surface of the other support towards their second surface opposite the first surfaces and cutting from the first surfaces towards their second surface. In addition, the direction of the cutting lines alternate across the crossing point of

the supports so that the every support folds into a quarter defined by the halves which are formed by the crossing supports.

In one particular embodiment, the boards that make the supports and back are multi-walls as defined above and are cut through from one skin through the entire thickness of their core right to the second skin. This second skin, which is sufficiently elastic, is left intact and makes the folding and unfolding axis along the cutting lines of the supports and backs.

The following will describe particular and non-limiting examples of the present invention with exemplary reference to the drawings without departing from the scope and spirit of the present invention.

Brief Description of the Drawings

Figs. 1A-B illustrate a deployable multi-shelf stand in a deployed state.

Fig. 2A-B illustrate a deployable multi-shelf stand in a folded state.

Fig. 3 illustrates a second configuration of a deployable multi-shelf stand in a deployed state.

Fig. 4 illustrates the second configuration of a deployable multi-shelf stand in a folded state.

Figs. 5A-D illustrate fixing and locking means of a deployable multi-shelf stand in different states of deployment.

Figs. 6A-B illustrate the deployable multi-shelf stand in intermediate state of deployment.

Fig. 7 illustrates a typical shelf of the deployable multi-shelf stand.

Figs. 8A-D illustrate a particular locking means for locking a deployed multi-shelf stand in a deployed state.

Figs. 9A-C illustrate one of the parts of the locking means which is illustrated in **Fig. 8A**.

Figs. 10A-F illustrate another part of the locking means which is illustrated in **Fig. 8A**.

Fig. 11 illustrates several examples of multi-walls for constructing a deployable multi-shelf stand of the present invention.

Figs. 12A-C illustrates a third configuration of a deployable multi-shelf stand in a folded state.

Detailed Description of the Drawings

The folded state of a particular configuration of the stand **100** is illustrated in **Figs. 2A-B** in perspective front and back views, respectively. Box **130** contains the stand parts, shelves **105** supports (not shown) and backs **125**, in their folded state. Locking and fixing means **210** is attached to the back **125** and is intended to lock to a matching locking and fixing means (not shown) that is attached to the support adjacent to the back **125** and in close proximity to the matching locking and fixing means **210** in the adjacent support. The back of box **130** is cut open in the middle, leaving two side wings **135**, where the opening between these wings allows access for holding and lifting the upper shelf **105**. This lifting drags the entire scaffold of the stand **100** including supports and backs and lower shelves, locks the supports to their corresponding adjacent backs at every floor and fixes the stand in a rigid state. **Figs. 1A-B** illustrate the erected fixed state of the stand **100** in perspective front and back views. The supports **110** are deployed from their folded state and as shown are made of two parts **110a** and **110b**, which are connected to each other through axis **115**. Axis **115** is in fact a cut made through the thickness of the supports, which enables to accommodate the stand **100** in a folded position inside box **130** until it is deployed. As shown, the backs **125** also deploy when lifting the upper shelf **105**. The following Figures show that the backs **125** are cut in the middle in this configuration to form a folding and deployment axis. This axis enables them to be folded together with the supports and between parallel supports and stack between neighbor shelves inside box **130**. They further deploy conjointly with the supports to erect the stand and distance the shelves from each other. After deploying, box **130** serves as a firm base for holding the stand **100** in its deployed state.

Figs. 5A-D illustrate the deployment of the stand **100** and its intermediate state in more detail. Supports **110** and backs **125** are cut in the middle to form parts **110a**, **110b** and **125a**, **125b**, and folding and unfolding axes **115** and **135**, respectively. Every axis is formed by cutting the boards that make the supports and backs sufficiently deep through the thickness of the boards that enables free movement of the parts between folding and unfolding states. At the same time, the axis keeps the board sufficiently continuous between the parts of the supports and backs to make a single continuous scaffold of the stand that is firm and suitable to carry high loads. Appropriate board structures that may be used to make the parts of the stand are illustrated in **Fig. 11**. In general, **Fig. 11** shows double skin rigid boards with three or more layers, where the skins are sufficiently elastic

to be used as a flexible surface for folding and unfolding the stand parts without breaking, fracturing or tearing. Several types of a multiwall structure **300**, which is found suitable for making the deployable stand of the present invention, are illustrated in **Fig. 11**. All types of the multiwall in **Fig. 11** include top and bottom skins **305** that cover a core **310**. The core **310** may take different forms. Non-limiting examples are transversely or vertically oriented flutes, bubbles, corrugated and honeycomb. Particular materials are fluted polypropylene, corrugated cardboard, honeycomb or reboard cardboard, bubble structure multi-layer plastic (PP) and three layers PVC board that essentially comprises the general structure of solid/foam/solid. In general, any board that may be suitable for the deployable stand of the present invention comprises any three or more layers of a rigid material that is covered with flexible layers, i.e., skins, on its surfaces and a rigid, preferably lightweight core. Non-limiting examples are thin PVC skin/polyurethane foam/thin PVC skin and PP (Polypropylene)/wood/PP. The main objective is that the core provides sufficient rigidity to the board and thereby to the supports and backs of the stand, and at the same time keeps its skins sufficiently flexible to fold and deploy in the cutting and folding axes, **115** or **135**. A double cardboard is also shown, which makes a good multiwall for the deployable stand of the present invention. The corrugated EB multiwall exemplifies the elasticity of these materials. In turn, the supports and backs that make the scaffold of the stand are sufficiently flexible to fold into the box and unfold to an erect position. In general, the depth of the cut reaches the inner surface of one of the skin, so that the skin remains intact and its elasticity enables it to serve as the folding and unfolding axis of the supports and backs. However, the depth of the cut depends on the particular design and specification of the stand may also not go throughout the entire core of the board up to the skin. Such multiwall forms are lightweight, which makes the stand easily portable and handled without applying great efforts.

Figs. 2A-B demonstrate how the supports and backs, which are made of a multiwall as shown in **Fig. 11**, are sufficiently elastic to enable them to fold into box **130**. **Figs. 5A-D** show that these supports and backs are cut through the first skin and core of the multiwall, leaving the second skin and optionally part of the core adjacent the second skin uncut. When the stand is deployed, the supports and backs unfold around their cutting lines that make their axis of movement. This is particularly exemplified in the intermediate stages of deployment in **Figs. 5B** and **5C**, showing the

supports and backs moving toward each other around their cuts until they interface and meet in a fully erected state.

The erected state of the deployed stand is held with a locking and fixing means **200**, a particular example of which is illustrated in **Figs. 5A-D** and **8A-D** through **10A-F**. This locking and fixing means **200** comprises essentially two elements, **205** and **210** that make a male-female inter-locking coupling. Male element **205** is fixed to a support part in proximity to the cutting line between every two parts of the support. Corresponding female element **210** is fixed to a back part that is leveled with the support back also in proximity to the cut between every two parts of the back. The fixing positions of the male and female elements are located adjacent each other and 90° one relative each other. The relative location of the elements of the fixing and locking means is such that when the supports and backs deploy, they get sufficiently closer to each other and lock together when the supports and backs are in fully erected position.

The supports and backs make an integral scaffold. In one particular embodiment, they are essentially cut from one piece. In another particular embodiment, the shelves are also cut from the same original piece of the supports and backs. Further, the box **130** may also form integral part of the stand which is cut from the original board. However, in all options, the shelves and box are also integrated with this scaffold. As a result, the stand **100** is deployed in its entirety upon a single pull from its folded position inside the box. **Figs. 6A-B** illustrate perspective front and back views of an intermediate state of deployment of the stand **100**. As shown, pulling the top shelf **105** of the stand causes all the lower shelves, supports **110** and backs **125**, to unfold until they are in erected position and the fixing means **200** secure them in place. This way the entire stand is fully deployed in a single pull.

Figs. 8A-D illustrate the particular example of a locking and fixing means **200** of the present invention. This means essentially comprises male **205** and female **210** elements that lock to each other when the stand is fully deployed, positioning adjacent supports **110** and backs **115** 90° relative each other. The male element **205** comprises a body **215**, a back plate **255**, prongs **225**, a hook **245** and a locking ring **235**. The body **215** of the male element **205** is pushed into the multiwall board that makes the support **110** and fixed there until its back plate **255** protrudes out of the distal skin at

the back of the support. Prongs **225** are imbedded in the multiwall core to fix the male element **205** in place. The female element **210** comprises a flat plate **220**, side hooks **230** and **250** and recessed handle **240**. The female element **210** is inserted into the back with its flat plate **220** protruding out of the proximal skin of the multiwall that makes the back part of the stand. Side hooks **230** and **250** are inserted into the core of the multiwall of the stand's back and fix the female element in place. When deploying the stand and unfolding its supports and backs, the male **205** and female **210** elements of this locking and fixing means **200** approach each other. When reaching a full erect position, hook **245** of the male element frictionally contacts recessed handle **240** and eventually gets locked in it, when the stand is fully deployed. **Figs. 9A-C** and **10A-F** illustrate the male **205** and female **210** elements of this locking and fixing means **200** in closer views.

The locking and fixing means **200** may further comprise a spring **400** pulling element that is locked between two male elements **205** of means **200**, which are fixed in supports parallel each other. **Figs. 5B-D** illustrate such a spring **400** in a particular floor of the stand. When the stand is in a folded state, every two parallel supports **110** in any given floor of the stand lay apart from each other on the shelf **115** and are at maximum distance from each other. As a result, spring **400** is stretched to its maximum length between parallel male elements **205**, which are fixed to the parallel supports **110**, and stores kinetic energy. This energy provides additional momentum to the pulling action of the top shelf **115** when deploying the stand **100** that causes the spring to contract back to its relaxed state. The amount of the energy that spring **400** stores depends on the spring constant and length. As a result, the spring **400** generates a pulling force that causes every parallel supports to be pulled towards each other, and further alleviates the deployment of the stand.

Other mechanisms for pulling parallel supports towards each other in the deployment of the stand may be contemplated within the scope of the present invention. Particular non-limiting examples are coiled springs, non-coiled springs, elastic bands, for example rubber bands, magnetic discs or bars, strings, cords and gravitation pulling elements.

Figs. 3 and **4** illustrate another particular configuration of the stand **100** of the present invention, with the difference that the backs **125** are folded outside box **130** and deploy to form a back wall that forms support for the stand **100**. In this configuration, the cutting lines **135** between backs **125**

are made at the shelves **105** levels. In order to be folded outside box **130**, the cutting lines are made from the proximal skin of the multiwall that makes the backs that is closer to the supports **110** towards the distal skin. In the configuration in **Fig. 1**, the cutting lines **135** in the backs **125** are made in the middle of every back and between backs. The cutting itself alternates between adjacent cutting lines. Namely, the cutting is made once from the proximal skin towards the distal skin and then from the distal skin towards the proximal skin of the backs. In both configurations, the supports **110** are cut in the middle and between supports in every floor. The cutting itself also alternates between adjacent cutting lines as described above, so that the supports fold on the shelves. This way, the cutting in the two configurations enables to pack the shelves and supports of the stand inside box **130** in a stack form and deploy them to an erect position in a single pulling and locking action. Supplemental back part **140** is added to the wall that the backs **125** form in the configuration in **Fig. 3**.

Figs. 12A-C illustrate another configuration of a deployable multi-shelf stand **100** in folded and deployed states. The supports **110** are located in the middle of the shelves **105** and pass through them along the height of the stand. As shown in these Figures, the supports **110** are positioned in cross configuration relative each other, thereby providing a stable and balanced support to the shelves. The supports comprise longitudinal cuts **155** along their length in their middle from their top to a selected depth that may reach down to their bottom along their length from the top shelf to the lowest shelf of the stand. Each support is cut along its length a selected distance between every two cutting lines **150** and meet the cutting lines **150**, so that the slits **115** are positioned in the middle between every two neighbor shelves **105** and the adjacent cutting lines **150** to the slits **115** in the middle are located in proximity to the shelves **105**, adjacent to the support edges. **Fig. 12B** shows that the slits **115** form two parts **110a**, **110b** of every support part between neighbor shelves **105**. The edges of these longitudinal cuts **155** meet the cutting lines **150** and slits **115**, which are cut along the width of the supports **110**. The supports cross each other at a crossing point **145**.

The cross configuration of the supports divides each of the two supports **110** into two halves **110A**, **110B**, in which the direction of the slit **115** in the middle one half, **110A**, is opposite the direction of the slit **115** in the middle of the second half, **110B**. The slits **115** extend along the thickness of the support **110** from one skin/surface of the support to its parallel skin/surface, so that the two parts

fold in opposite directions relative each other. Since the supports are positioned 90° relative each other, every one of their two halves **110A**, **110B**, folds 90° relative the neighbor parts of the supports **110** that crosses it into one of the four quarters that the crossed supports define.

The slits **115** that make the axes of folding and unfolding of the supports **110** in their middle and edges alternate between cutting from a first skin/surface of one support that faces the skin/surface of the other support towards their second skin/surface opposite the first skin/surface and cutting from the first skin/surface towards their second skin/surface. In addition, the direction of the slits **115** and cutting lines **150** alternate across the crossing point **145** of the supports so that every support folds into a quarter defined by the halves, which are formed by the crossing supports **110A**, **110B**. In the folded state of the stand **100**, the supports **110** fold on the shelves **105**, letting the shelves pack in stack formation and be contained inside box **130**. The box **130** also serves as a base for stabilizing the stand in its deployed position. Locking and fixing means may be attached in this configuration between every two adjacent halves of the crossing supports in 90° position relative each other. The mating male-female parts of the locking and fixing means may be placed between every two halves of the supports in 90° relative each other. The mating male-female parts may be placed near the crossing point **145** and cutting lines **150** or near the slits **115** in the middle of the supports, leveled relative each other and sufficiently close to each other to lock together when deploying the stand. In addition, a spring may stretch between the male-female parts 45° relative to the support halves.

Fig. 7 illustrates a particular configuration of a shelf **105** of the stand of the present invention.

Other locking and fixing means of the supports and backs of the deployable stand may be contemplated within the scope of the present invention. Particular non-limiting examples are single direction pins, screws and Christmas-tree pins that are held in the supports and imbed into their adjacent backs when deploying the stand, adhesives, double-side adhesive tapes and Velcro strips (scotch).

Claims

1. A deployable stand comprising one or more floors, wherein every floor comprises:
a shelf;
supports attached to bottom of said shelf; and
locking and fixing means attached to said supports,
wherein said supports pass through cuttings in said shelves and are continuous with said shelves at said cuttings and are foldable over said shelf and deployable vertically relative said shelf,
wherein said locking and fixing means are configured to independently connect with each other in a deployed state of said stand and fix and lock said stand in a fully erect position,
wherein said shelves are stackable on each other in a folded position of said deployable stand,
wherein said stand is vertically deployable to erect position in a single pull of said floors from top of said stand.

2. The deployable stand according to claim 1, wherein said supports are foldable around a cutting line in their middle and cutting lines at their edges,
wherein said cutting line in said middle and cutting lines at edges of said supports alternate between cutting from first surface facing surface of another support towards their second surface opposite said first surface and cutting from said first surface towards said second surface.

3. The deployable stand according to claims 2, further comprising a back attached to bottom of said shelf, adjacent to and positioned 90° relative to said supports,
wherein said supports are parallel each other, wherein said first surface is proximal surface of every one of said parallel supports facing each other and said second surface is distal surface of said parallel supports opposite said proximal surface, wherein said cutting line in said middle and cutting lines at edges of each one of said parallel supports alternate between

cutting from their proximal surfaces facing each other towards their distal surfaces opposite said proximal surfaces and cutting from said distal surfaces towards said proximal surfaces, wherein said back is foldable over or outside said shelf relative said parallel supports, and wherein said locking and fixing means are fixed on said supports and back and connect with each other in a deployed state of said stand and fix and lock said supports to said back in a fully erect position.

4. The deployable stand according to claim 2, wherein cutting of cutting lines parallel each other in said parallel supports is selected from: cutting in directions opposite each other, cutting in directions towards each other, and cutting in a same direction.

5. The deployable stand according to claim 3, wherein said parallel supports are located a distance length from each other, wherein said distance length ranges between length of said shelf and a length sufficient to fix said locking and fixing means to said supports.

6. The deployable stand according to claim 5, wherein said distance length equals length of said shelf, wherein said parallel supports are aligned and integrated with sides of said shelf to form a continuous single board.

7. The deployable stand according to claim 5, comprising two parallel supports, wherein said distance length is sufficiently small to create a T-shape by said two parallel supports and back.

8. The deployable stand according to claim 1, comprising two of said supports comprising longitudinal cuts in their middle from top to a selected depth, wherein said two supports cross each other at said longitudinal cuts, wherein a crossing point of said two supports attach to center of bottom and top shelves,
wherein said supports are foldable around said slits in their middle and said cutting lines at their edges,
wherein said longitudinal cuts meet said cutting lines,

wherein said slits in said middle and cutting lines at said edges of said supports alternate between cutting from first surface facing surface of the other support towards their second surface opposite said first surface and cutting from said first surface towards said second surface,

wherein said slits in said middle and cutting lines at said edges of every support alternate between said first surface towards said second surface and said second surface towards said first surface across said crossing point,

wherein every one of two halves of said supports folds 90° relative neighbor parts of the support that crosses it into one of four quarters that said supports define.

9. The deployable stand according to claim 2, wherein said back further comprises a supplemental back part, wherein said back and supplemental back part are continuous with each other through a cutting line between them, and wherein said cutting line is cut from said proximal towards said distal surface.

10. The deployable stand according to claim 1, wherein said locking and fixing means are selected from male-female inter-locking and fixing coupling, single direction pins, screws and Christmas-tree pins that are held in said supports and imbed into said backs adjacent said support when deploying said stand, magnetic discs or bars, adhesives, double-side adhesive tapes and Velcro strips (scotch).

11. The deployable stand according to claim 10, wherein said male-female inter-locking and fixing coupling comprises a male element comprising a body, a back plate, prongs extending out of top of said male element and a hook, and a female element comprising a flat plate side anchors at front side of said flat plate and a handle at back side of said flat plate,

wherein said body of said male element is configured to fix into said support with said prongs, said back plate protruding out of said distal surface of said support,

wherein said hook is configured to lock to said handle when deploying said stand.

12. The deployable stand according to claim 10, wherein said male element further comprises a locking ring for locking means for pulling parallel supports towards each other in deployment of said stand.

13. The deployable stand according to claim 12, wherein said means for pulling said parallel supports is selected from coiled springs, non-coiled springs, elastic bands, for example rubber bands, strings, cords and gravitation pulling elements.

14. The deployable stand according to claim 13, wherein said means for pulling said parallel supports store kinetic energy upon stretching between said male elements in folded state of said supports and release said kinetic energy upon deploying said stand, said kinetic energy enhances speed of deploying said stand and alleviates force applied for deploying said stand.

15. The deployable stand according to claim 1, further comprising a box at base of said stand, wherein said box is configured to accommodate said shelf, supports and locking and fixing means in folded state of said supports and serve as a base in a deployable state of said stand.

16. The deployable stand according to claim 15, wherein said box is further configured to accommodate said back in folded state of said back over said shelf.

17. The deployable stand according to any one of claims 1-16, wherein said stand comprises a plurality of said floors,
wherein any adjacent floors are attached to each other,
wherein said supports and back of any one floor are continuous with supports and back of adjacent floors along a cutting line, wherein cutting lines along said supports alternate between cutting from their proximal surfaces facing each other towards their distal surfaces opposite said proximal surfaces and cutting from said distal surfaces towards said proximal surfaces, wherein cutting lines along said backs alternate between cutting from their proximal surfaces facing said supports towards their distal surfaces opposite said proximal surfaces and cutting from said distal surfaces towards said proximal surfaces.

18. The deployable stand according to any one of claims 1-17, wherein said supports and backs are made from double skin rigid boards with three or more layers core, wherein said skins are sufficiently elastic to be used as a flexible axis for folding and unfolding parts of said stand parts without breaking, fracturing or tearing.

19. The deployable stand according to claim 18, wherein said boards are made of multiwall structures comprising any three or more layers rigid core that is covered with flexible skins.

20. The deployable stand according to claim 19, wherein said core is lightweight.

21. The deployable stand according to claim 19, wherein structure of said core is selected from transversely or vertically oriented flutes, bubbles, corrugated and honeycomb.

22. The deployable stand according to claim 19, wherein materials for said multiwall structures are selected from fluted polypropylene, corrugated cardboard, honeycomb or reboard cardboard, bubble structure multi-layer plastic (PP), three layers PVC board essentially comprising a structure of a solid-foam-solid, thin PVC skin/polyurethane foam/thin PVC skin and PP (Polypropylene)/wood/PP and a double cardboard.

23. The deployable stand according to claim 19, wherein said boards are cut through from one skin through entire thickness of said core to a second skin, wherein said second skin is sufficiently elastic to make said foldable and deployable cutting lines.

24. The deployable stand according to claim 8, further comprising mating male-female parts of said locking and fixing means placed between every two halves of said supports in 90° relative each other, said mating male-female parts are placed near said crossing point and cutting lines or near said slits in middle of said supports and leveled relative each other and sufficiently close to each other to lock together when deploying said stand.

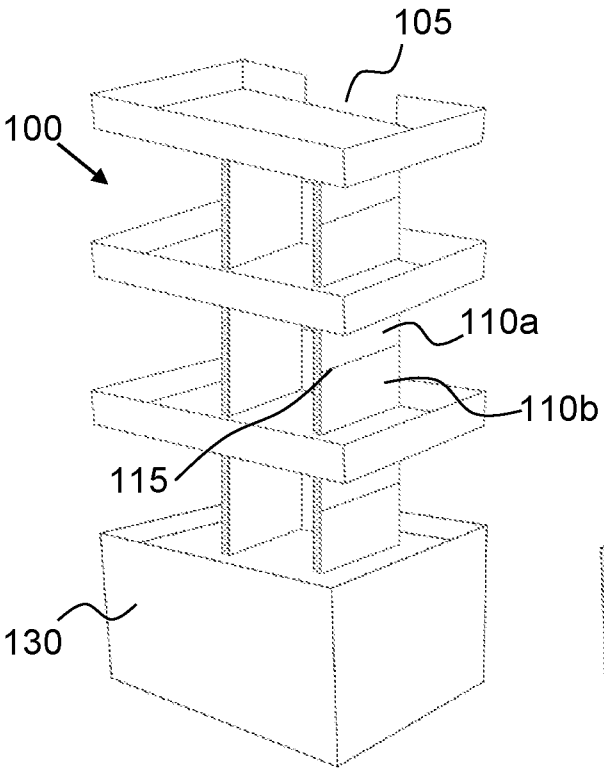

Fig. 1A

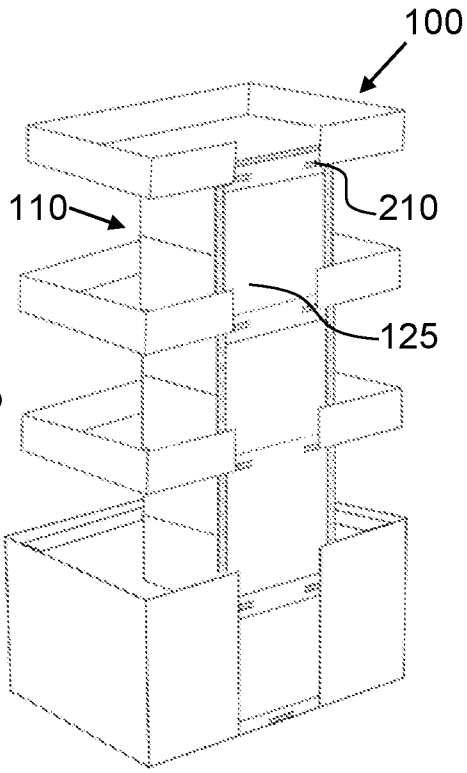

Fig. 1B

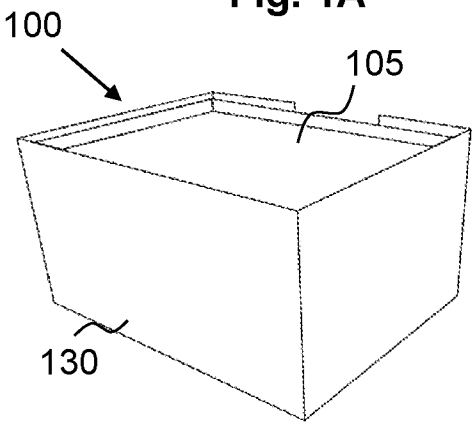

Fig. 2A

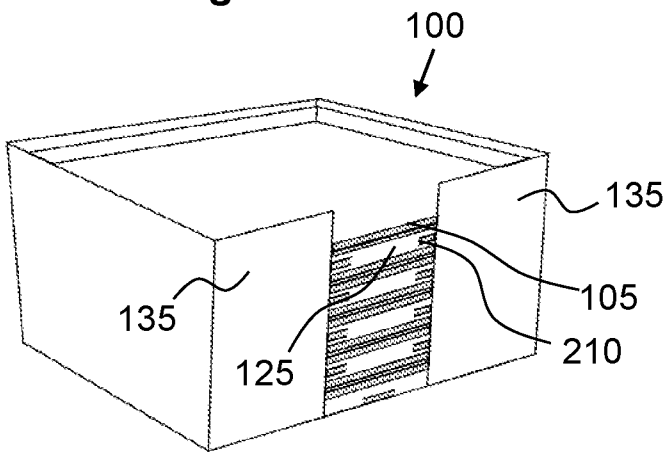

Fig. 2B

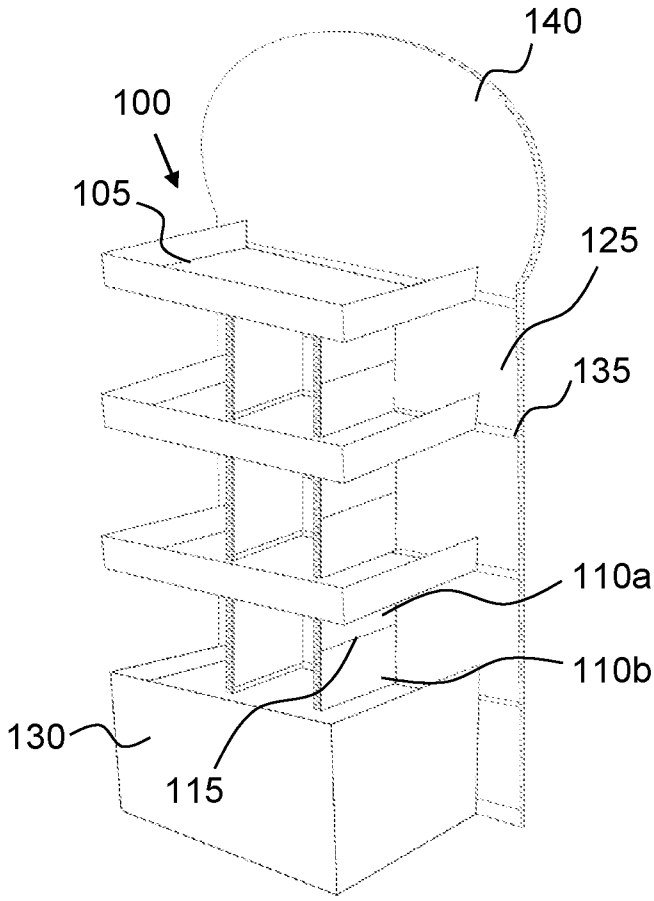

Fig. 3

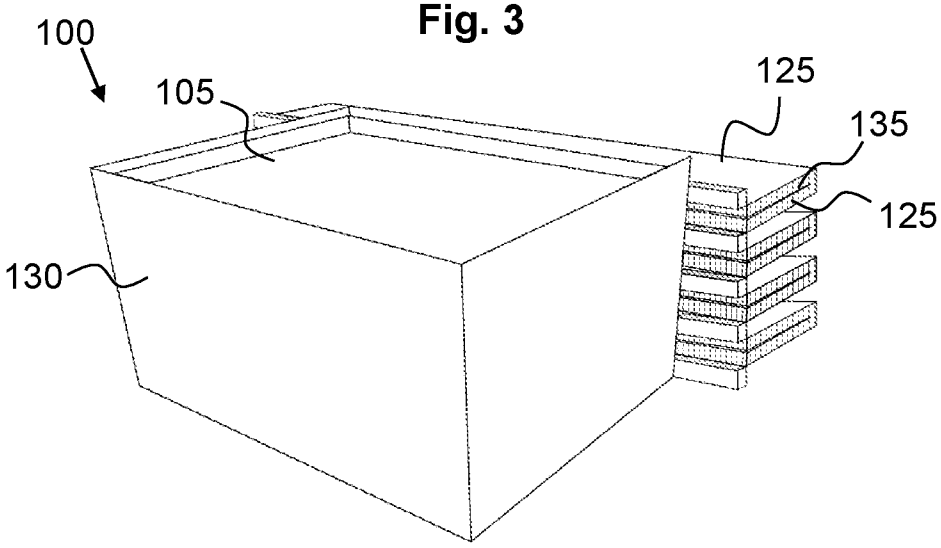

Fig. 4

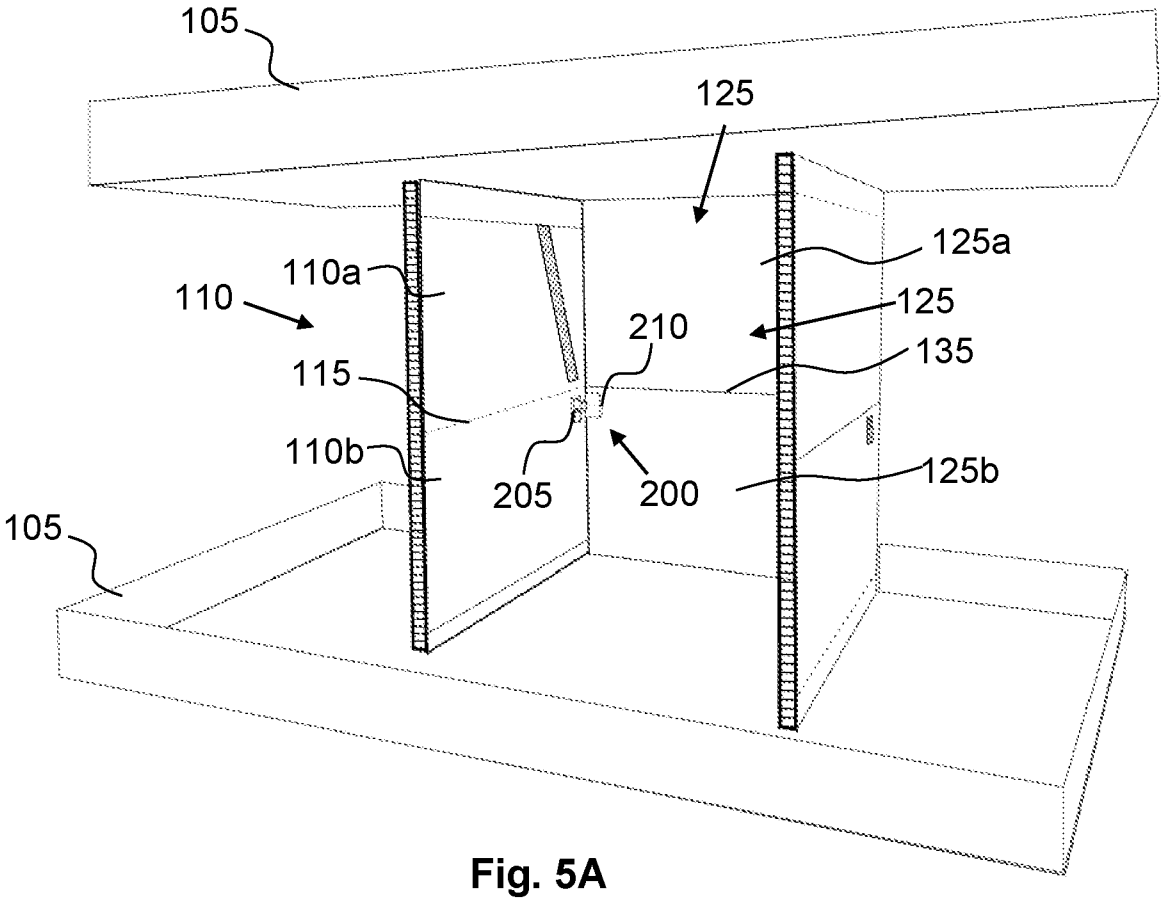
105
125
125a
110a
110
125
210
135
115
110b
205
200
125b
105

Fig. 5A

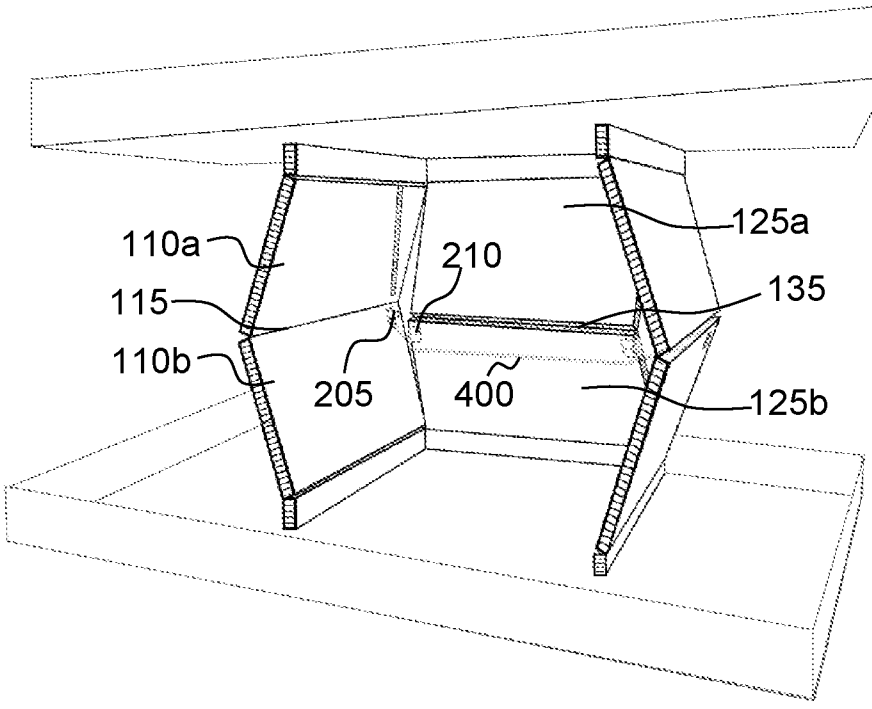
125a
110a
210
135
115
110b
205
400
125b

Fig. 5B

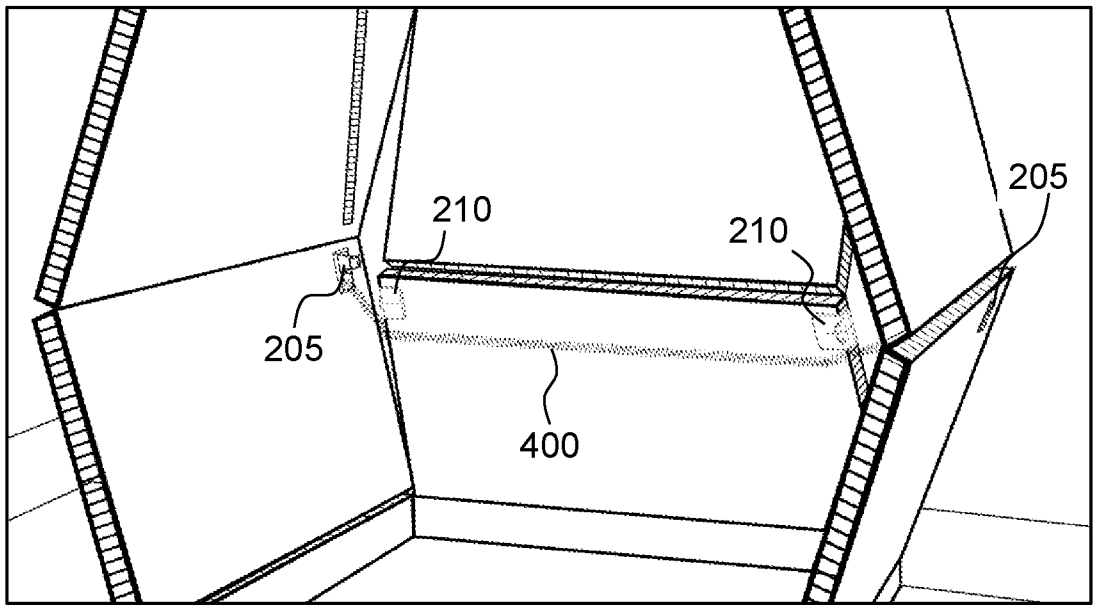

Fig. 5C

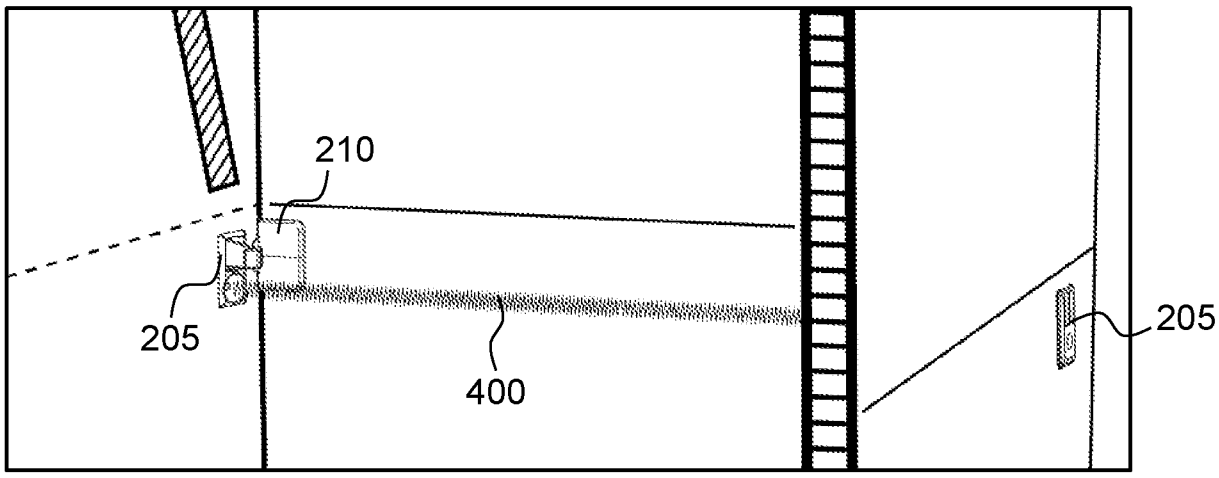

Fig. 5D

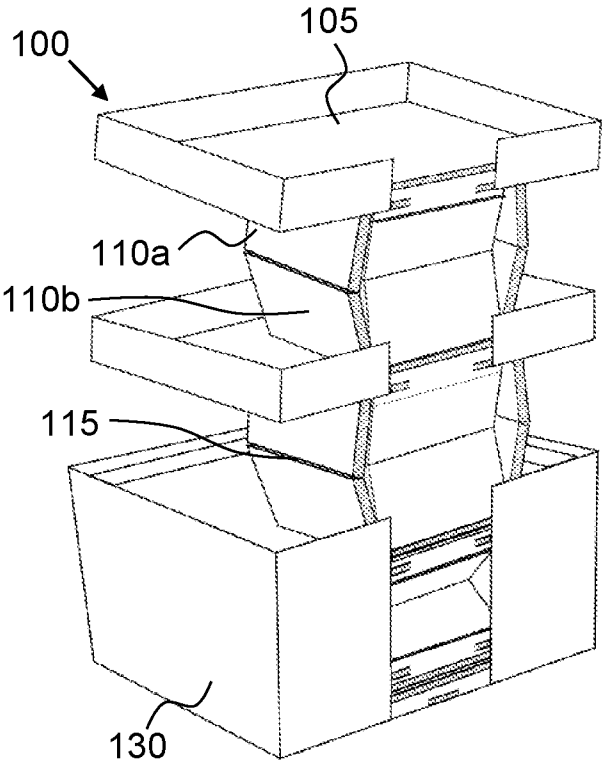

Fig. 6A

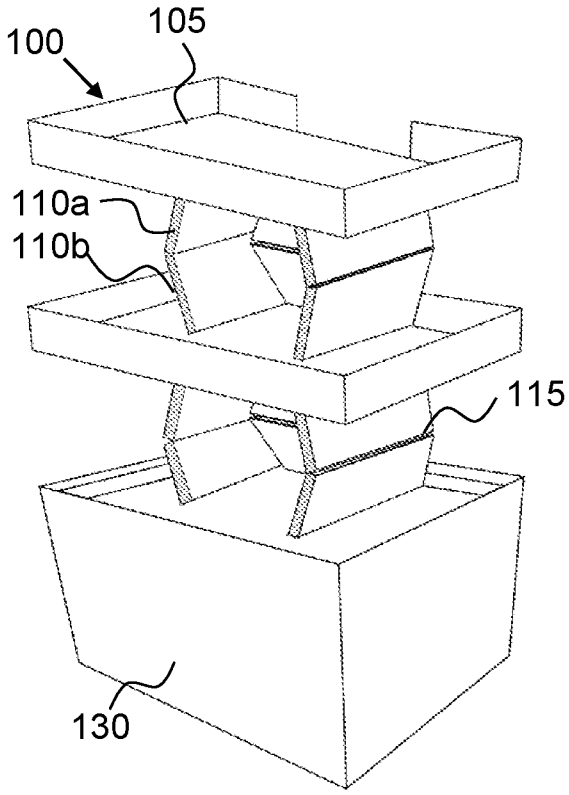

Fig. 6B

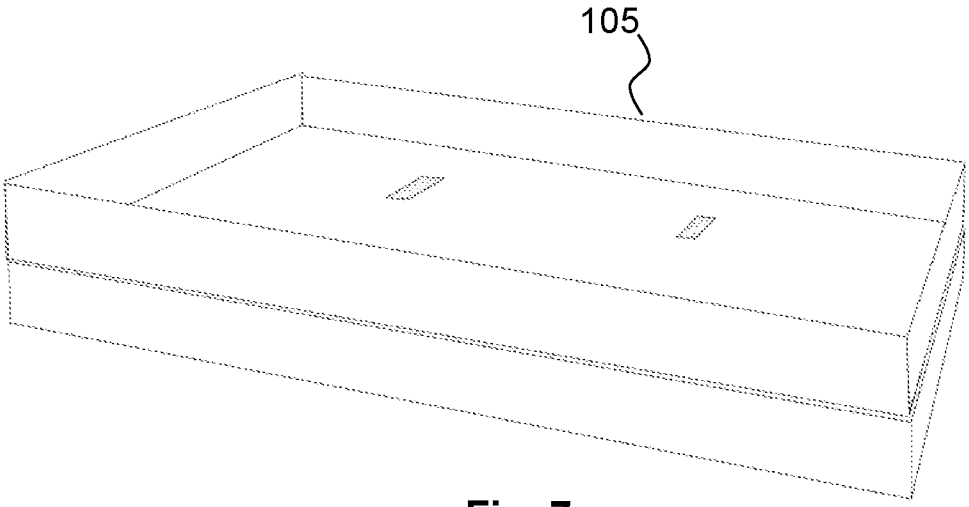

Fig. 7

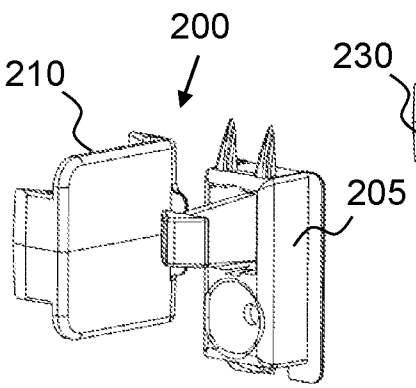

Fig. 8A

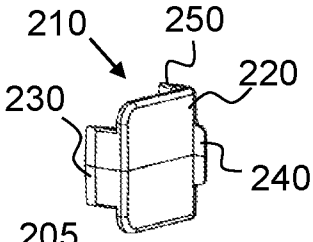

Fig. 8B

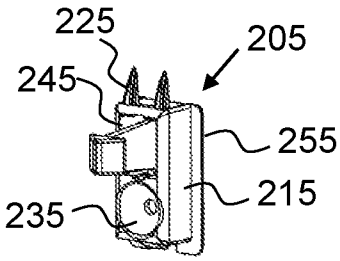

Fig. 8C

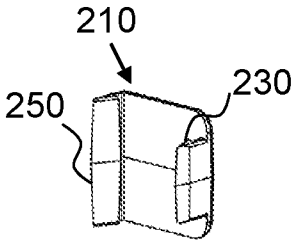

Fig. 8D

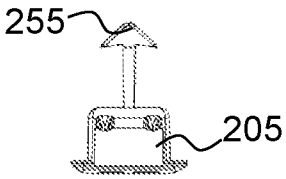

Fig. 9A

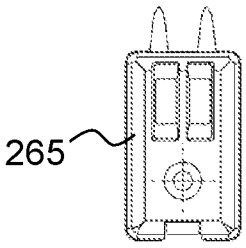

Fig. 9B

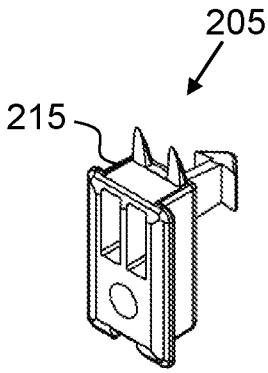

Fig. 9C

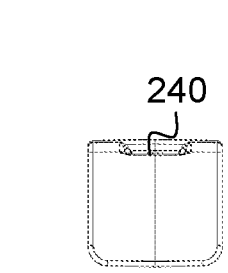

Fig. 10C

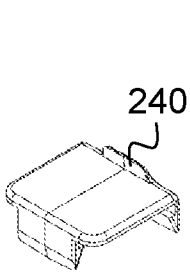

Fig. 10D

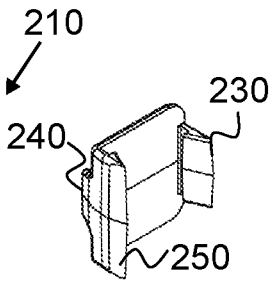

Fig. 10E

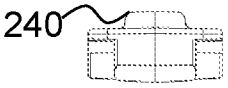

Fig. 10B

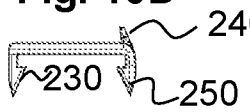

Fig. 10F

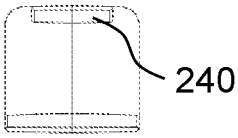

Fig. 10A

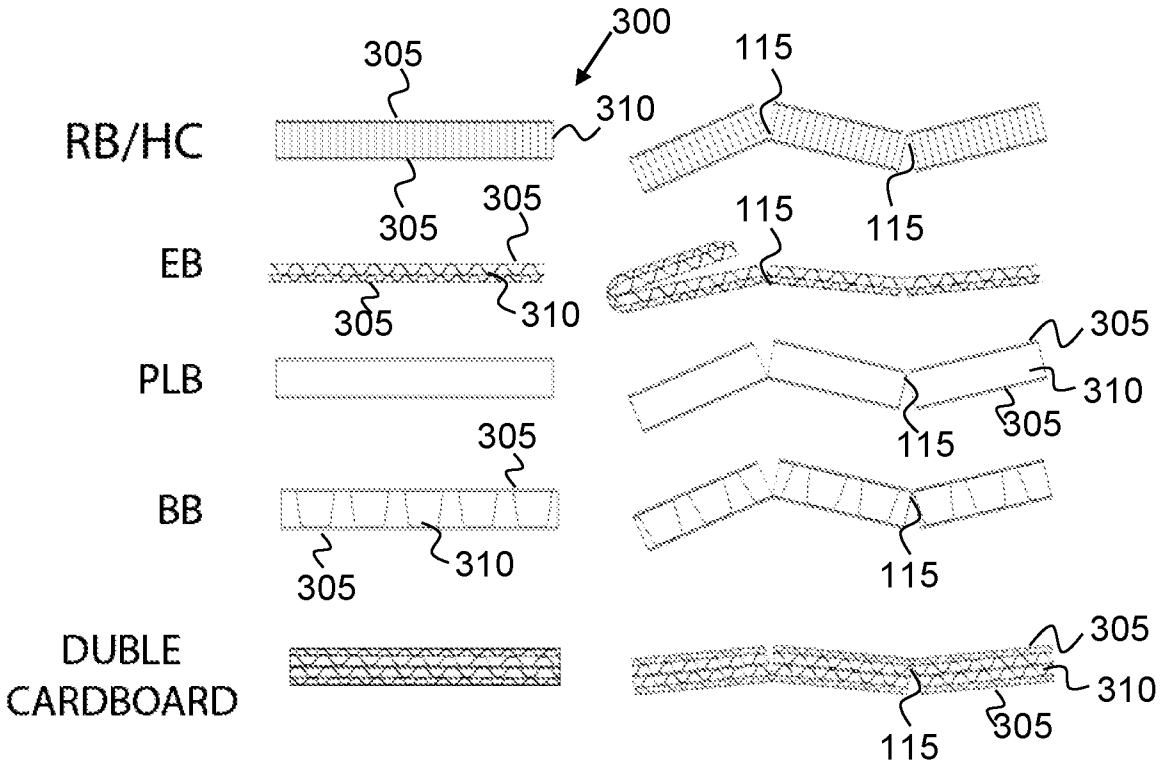

Fig. 11

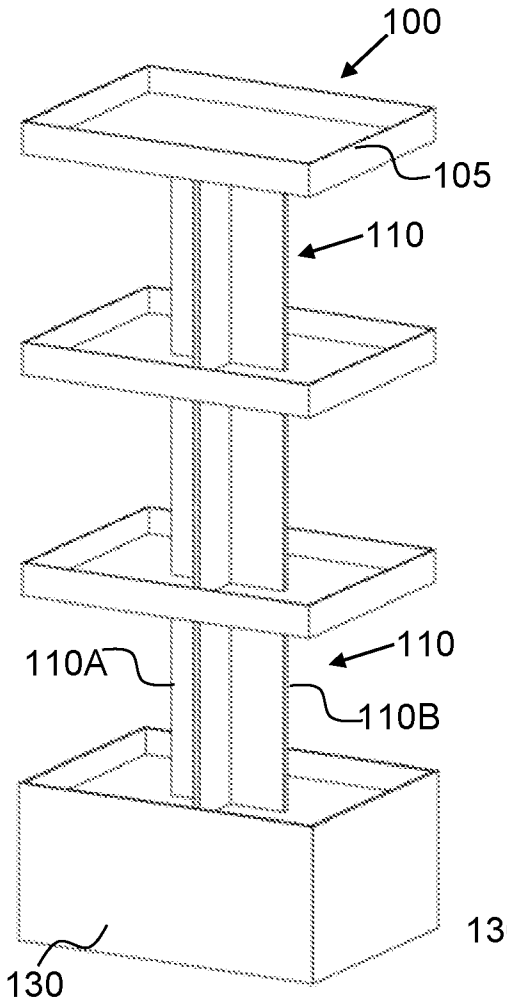

Fig. 12A

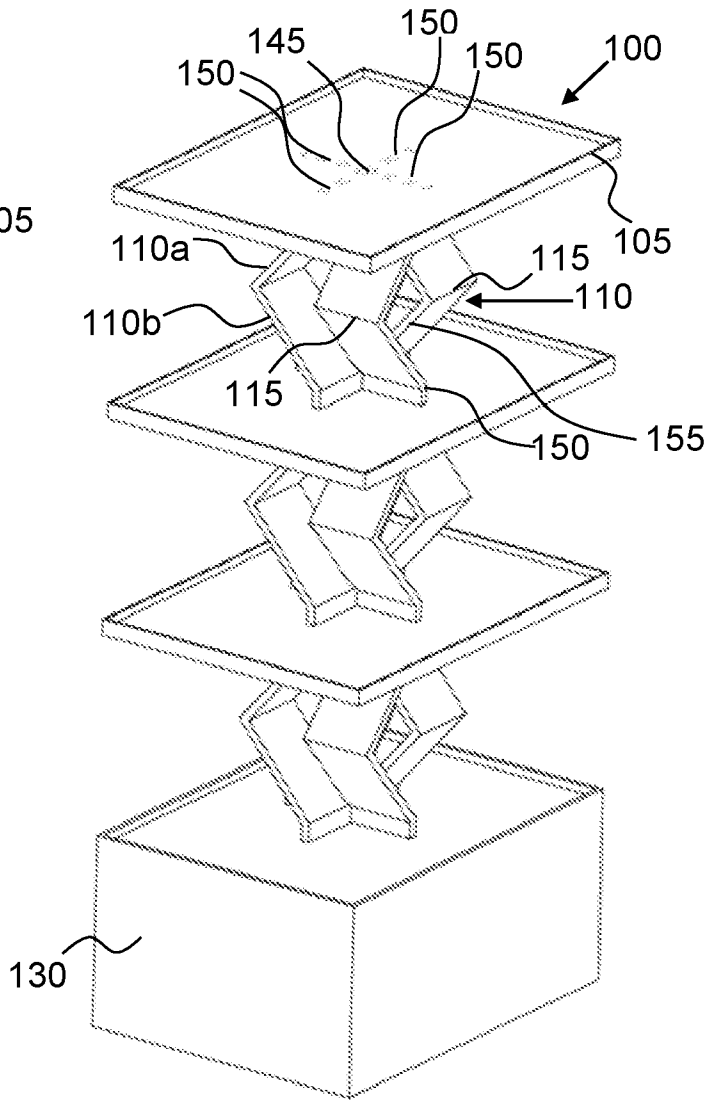

Fig. 12B

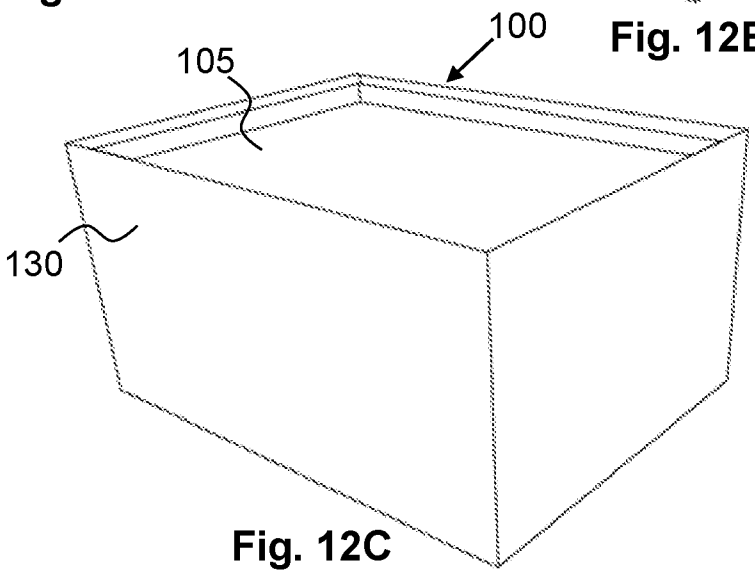

Fig. 12C

INTERNATIONAL SEARCH REPORT

International application No.
PCT/IL2023/050441

A. CLASSIFICATION OF SUBJECT MATTER

A47F 5/11(2023.01)i; ***A47F 5/00***(2023.01)i; ***A47F 5/10***(2023.01)i; ***A47F 3/00***(2023.01)i
CPC: A47F 5/114; A47F 5/116; A47F 5/0018; A47F 5/10; A47F 3/004

According to International Patent Classification (IPC) or to both national classification and IPC

B. FIELDS SEARCHED

Minimum documentation searched (classification system followed by classification symbols)

A47F 5/11; A47F 5/00; A47F 5/10; A47F 3/00
CPC: A47F 5/114; A47F 5/116; A47F 5/0018; A47F 5/10; A47F 3/004

Documentation searched other than minimum documentation to the extent that such documents are included in the fields searched

Electronic data base consulted during the international search (name of data base and, where practicable, search terms used)

Databases consulted: Derwent Innovation

C. DOCUMENTS CONSIDERED TO BE RELEVANT

Category*	Citation of document, with indication, where appropriate, of the relevant passages	Relevant to claim No.
A	EP 0663170 B1 (STABERNACK GMBH GUSTAV) 03 September 1997 (1997-09-03) the entire document	1-24
A	US 2015313355 A1 (ORI ENTPR LTD) 05 November 2015 (2015-11-05) the entire document	1-24
A	US 2006118460 A1 (PICQUIC TOOL COMPANY INC) 08 June 2006 (2006-06-08) the entire document	1-24
A	NL 2022802 B1 (POZO NEGRO BEHEER B V) 02 October 2020 (2020-10-02) the entire document	1-24
A	EP 2705778 A1 (SPS PRINT GROUP LTD) 12 March 2014 (2014-03-12) the entire document	1-24
A	US 2014014606 A1 (MESTRES ARMENGOL FERRAN) 16 January 2014 (2014-01-16) the entire document	1-24

☐ Further documents are listed in the continuation of Box C. ☑ See patent family annex.

* Special categories of cited documents:
"A" document defining the general state of the art which is not considered to be of particular relevance
"D" document cited by the applicant in the international application
"E" earlier application or patent but published on or after the international filing date
"L" document which may throw doubts on priority claim(s) or which is cited to establish the publication date of another citation or other special reason (as specified)
"O" document referring to an oral disclosure, use, exhibition or other means
"P" document published prior to the international filing date but later than the priority date claimed
"T" later document published after the international filing date or priority date and not in conflict with the application but cited to understand the principle or theory underlying the invention
"X" document of particular relevance; the claimed invention cannot be considered novel or cannot be considered to involve an inventive step when the document is taken alone
"Y" document of particular relevance; the claimed invention cannot be considered to involve an inventive step when the document is combined with one or more other such documents, such combination being obvious to a person skilled in the art
"&" document member of the same patent family

Date of the actual completion of the international search	Date of mailing of the international search report
17 July 2023	**18 July 2023**

Name and mailing address of the ISA/IL	Authorized officer
Israel Patent Office **Technology Park, Bldg.5, Malcha, Jerusalem, 9695101, Israel** **Israel** Telephone No. **972-73-3927212** Email: **pctoffice@justice.gov.il**	**NARGASI Ayelet** Telephone No.

INTERNATIONAL SEARCH REPORT
Information on patent family members

International application No.
PCT/IL2023/050441

Patent document cited in search report	Publication date (day/month/year)	Patent family member(s)	Publication date (day/month/year)
EP 0663170 B1	03 September 1997	EP 0663170 A1	19 July 1995
		EP 0663170 B1	03 September 1997
		AT 157516 T	15 September 1997
		DE 9400369 U1	11 May 1995
		DE 59403963 D1	09 October 1997
US 2015313355 A1	05 November 2015	US 2015313355 A1	05 November 2015
		CA 2889686 A1	30 October 2015
US 2006118460 A1	08 June 2006	US 2006118460 A1	08 June 2006
		CA 2526609 A1	09 May 2006
NL 2022802 B1	02 October 2020	NL 2022802 B1	02 October 2020
EP 2705778 A1	12 March 2014	EP 2705778 A1	12 March 2014
		GB 201316122 D0	23 October 2013
		GB 2507859 A	14 May 2014
		GB 201216120 D0	24 October 2012
		GB 201222918 D0	30 January 2013
US 2014014606 A1	16 January 2014	US 2014014606 A1	16 January 2014
		EP 2580997 A1	17 April 2013
		ES 2372076 A1	13 January 2012
		ES 2372076 B1	19 November 2012
		MX 2012014308 A	05 March 2013
		WO 2011154568 A1	15 December 2011
		WO 2011154568 A8	31 January 2013