Feb. 19, 1946. W. M. ROBERDS 2,395,195

TREATMENT OF METALS

Filed May 29, 1943

FIG. 1.

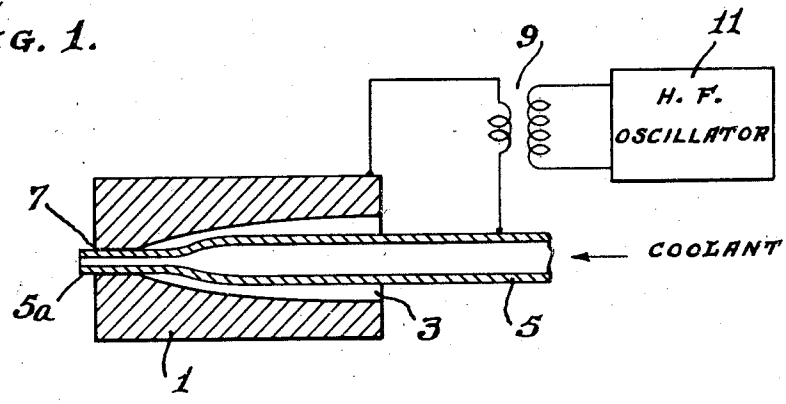

FIG. 2.

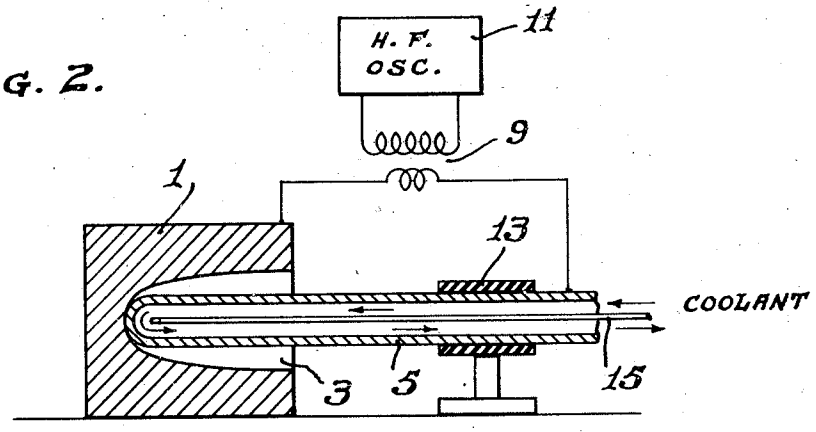

Inventor

Wesley M. Roberds

By

Attorney

Patented Feb. 19, 1946 2,395,195

UNITED STATES PATENT OFFICE

2,395,195

TREATMENT OF METALS

Wesley M. Roberds, Collingswood, N. J., assignor to Radio Corporation of America, a corporation of Delaware

Application May 29, 1943, Serial No. 488,987

1 Claim. (Cl. 219—13)

This invention relates to the heat treatment of metals, and more particularly to a method of altering the hardness of the wall surfaces of hollow metallic members.

The use of ferrous metal parts in many industrial applications and other fields of use is very well known. Where such parts involve surfaces which rub against each other or against which great pressures are applied, as in the case of mold cavities in which bullets are molded, for example, these surfaces are subjected to considerable wear. In order to prolong the life of the parts involved, it has been necessary to harden the working surfaces thereof. For this purpose, it has been proposed heretofore to pass radio frequency currents through the work at sufficiently high power to obtain extremely rapid heating thereof along only a relatively thin layer under the surface to be hardened. In general, this is accomplished by scanning the work along the surface to be hardened with a suitable applicator in the form of an inductor coil which is connected to a source of radio frequency energy. Thus, for example, if the surface of a cylindrical rod or shaft is to be hardened, an inductor of slightly larger internal diameter than the diameter of the shaft is placed around the latter and relative movement is effected between the shaft and the inductor while energy is supplied thereto. The high frequency current induced in the work heats the work rapidly as the work is scanned. Where, for example, the inner surface of a tubular member is to be hardened, an inductor coil of slightly smaller external diameter than the internal diameter of the tube is utilized, and the work is similarly scanned.

In many instances, the work to be scanned is of such small diameter at the surface to be hardened that the use of an applicator ring or an inductor coil is not feasible, since coils of small diameter are difficult to form out of hollow conductors such as are employed with radio frequency currents. Moreover, in some instances, the surfaces to be hardened are not uniform in diameter. For example, in the case of molds employed in the manufacture of small bullets, the mold cavities are both of non-uniform diameter and of too small a diameter even at the widest point to make the use of an inductor coil feasible.

The primary object of my present invention is to provide an improved method of altering the hardness of metallic members of small size which will not be subject to the above mentioned limitations.

More particularly, it is an object of my present invention to provide an improved method of altering the hardness of metallic members having small surface dimensions.

A still more specific object of my present invention is to provide an improved method of hardening the walls of cavities formed in metallic members, which cavities are too small to accommodate inductor heating coils such as are conventionally used with radio frequency heating methods.

It is also an object of my present invention to provide an improved method as above set forth which is very simple to carry out and which is highly efficient in practice.

In accordance with my present invention, the metallic member of which one surface is to be hardened is made to act as one element or conductor of a concentric line, and a radio frequency current is passed through such line. Since radio frequency currents are known to pass along the adjacent surfaces of the elements of a concentric line, it is apparent that the current will pass substantially along the surface to be hardened. Now, if the current is made of sufficient intensity or is supplied at sufficiently high power, it can be made to heat the surface of which the hardness is to be altered with extreme rapidity. For example, if it is desired to harden the wall surface of a cavity formed in a metallic member, the member may be arranged to act as the outer conductor of a concentric line with the wall of the cavity being the inner surface of said outer conductor. A second conductor, such as a tube of copper or the like which may be water cooled, is placed within the cavity in concentric relation therewith and caused to make contact with the work at the bottom of the cavity. The copper tube is of smaller internal diameter than that of the cavity and forms the inner conductor of the concentric line. Radio frequency current passed through the line will flow along the outer surface of the inner, tubular conductor in one direction, and back along the wall of the cavity in the opposite direction. The current can be made of such intensity that it will rapidly heat only a very thin layer under the wall or surface defining the cavity substantially instantaneously to the temperature requisite for obtaining the desired hardness alteration.

The novel features that I consider characteristic of my invention are set forth with particularity in the appended claim. The invention itself, however, both as to its organization and method of operation, as well as additional objects and advantages thereof, will best be understood from the following description of several embodi-

ments thereof, when read in connection with the accompanying drawing, in which

Figure 1 is a view partly in section and partly diagrammatic showing one arrangement for practicing my present invention, and

Figure 2 is a similar view showing a slightly different way of practicing this invention.

Referring more particularly to the drawing, wherein similar reference characters designate corresponding parts throughout, there is shown, in Fig. 1, a metallic member 1 having a cavity 3 therein the surface of which is to be hardened. The member 1 may be a bullet mold of ferrous metal for molding bullets of small size, say, up to 50 calibre. The cavity 3 is the mold cavity appropriate to the particular bullets to be formed.

Within the cavity 3 is inserted a tubular conductor 5 of copper or the like one end 5a of which is of reduced diameter for snug reception in an opening 7 formed in the mold 1 and communicating with the pointed end of the mold cavity 3. Thus, electrical contact is established between the conductor 5 and the mold 1. The opening 7 has been shown of relatively large diameter in the drawing for the sake of clearness, but it is to be understood that in practice the diameter thereof will be very small. In any case, the opening 7 is so arranged that when the tubular conductor 5 is inserted therein, the conductor 5 will be coaxial or concentric with the cavity 3. Thus, the mold 1 forms the outer conductor and the tube 5 the inner conductor of an electrically closed line in the nature of a concentric line.

The concentric line 1, 5 is connected through a suitable transformer 9 to a source of high frequency electric energy 11, such as a vacuum tube oscillation generator supplying radio frequency current. When the generator is connected to the concentric line 1, 5, the high frequency current passes in one direction along substantially the outer surface of the inner conductor 5 and then in the opposite direction along substantially the surface of the cavity 3. It is desirable that current be supplied at sufficient power to substantially instantaneously heat a very thin layer under the wall of the cavity 3 to the hardening temperature, and the metal of the mold 1 which backs up the cavity may be utilized for "self-quenching" in the manner more fully set forth and claimed in the copending application of George H. Brown, Serial No. 421,746, and assigned to Radio Corporation of America. However, if desired, the heated work may be water quenched by simply withdrawing the inner conductor 5 from the cavity 3 while cooling water is flowing therethrough and permitting the water to flow against the heated wall of the cavity.

In one case, where the mold 1 was made of high carbon steel and was designed for molding 30 calibre bullets, current of approximately 500 kc. per second was supplied to the work at a power of about 70 to 75 kw. per square inch of surface area at the cavity 3 and for a period of about 0.3 second. The power supplied to the work and the time for which it is applied will, of course, depend upon the material of the work and the degree of hardness alteration necessary, but I have found, in general, that the time for which the indicated power is applied should not exceed 0.3 second. Water, air, or other suitable coolant may be forced through the hollow conductor 5 for cooling while the current is flowing in the concentric line.

In the arrangement shown in Fig. 2, the cavity 3 is shaped somewhat differently than in the mold of Fig. 1, and the opening 7 is omitted. In this case, the inner, tubular conductor 5 may be closed at one end and its closed end may be brought into intimate contact with the apex end of the cavity 3. To maintain the inner conductor 5 in concentric relation with the cavity 3, a suitable supporting bracket 13 may be provided along which the conductor 5 can be slid. A partition 15 within the hollow conductor 5 terminating at a point short of its closed end provides a path for the cooling fluid as indicated by the applied arrows. The operation of this particular arrangement is similar to that described in connection with Fig. 1.

Although I have shown and described two arrangements for practicing the present invention, it will, no doubt, be obvious to those skilled in the art that many other ways of practicing it are possible. For example, if the diameter of the cavity 3 is uniform throughout, as it might be in the case where the work to be treated is of tubular form, the inner conductor 5 might be provided with an outwardly extending circular flange which would be caused to engage the inner wall of the tubular work, and the conductor 5 could then be slid along the support 13 while the flange is in engagement with the inner surface of the work. In this way, a scanning effect is produced. However, this method of practicing the present invention may not be suitable in some instances, and, in general, the "one shot of current" method is preferred in connection with such arangements as are illustrated in the accompanying drawing. Also, where it is desired to alter the hardness of the outer surface of a hollow member, it is obvious that this member may be made the inner conductor of the concentric line. Many other variations will, no doubt, readily suggest themselves to those skilled in the art. Moreover, while the present invention has been described particularly with reference to the hardening of surfaces of a ferrous metal, it will undoubtedly be apparent to those skilled in the art that it may be practiced equally well where it is desired to anneal certain metals, such as brass, for example. I, therefore, desire that my invention shall not be limited except insofar as is made necessary by the prior art and by the spirit of the appended claim.

I claim as my invention:

The method of heat treating with the aid of an electrically conductive member the wall surface of a cavity formed in a metallic member, said cavity having a substantially closed inner end, which comprises inserting said first named member into said cavity in concentric relation therewith and bringing the inner end of said first named member into engagement with the inner end of said cavity whereby to establish electrical connection between said members and thereby provide an electrically closed line in the nature of a concentric line, passing a radio frequency current through said line to effect heating of said wall surface, and thereafter separating said members from each other.

WESLEY M. ROBERDS.