July 3, 1951 J. GEA 2,558,719

STORM WINDOW

Filed May 6, 1946 2 Sheets-Sheet 1

FIG. 1

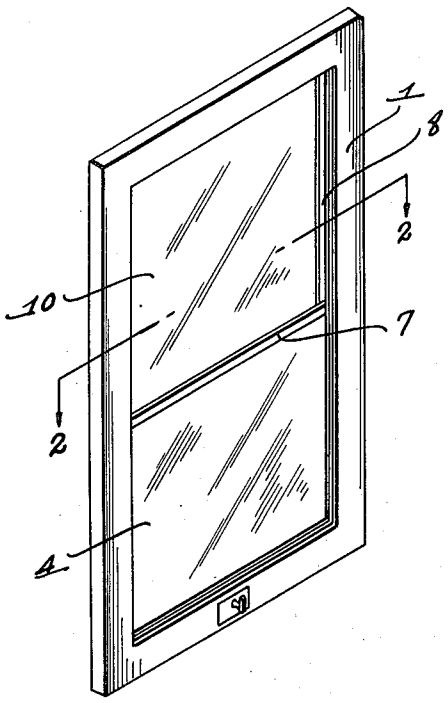

FIG. 3

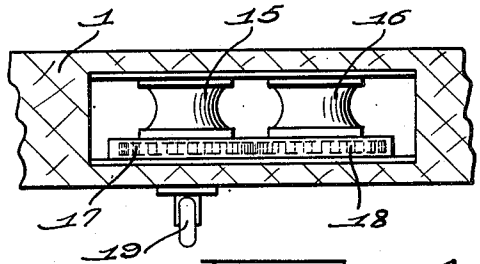

FIG. 4

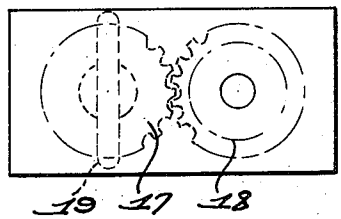

FIG. 2

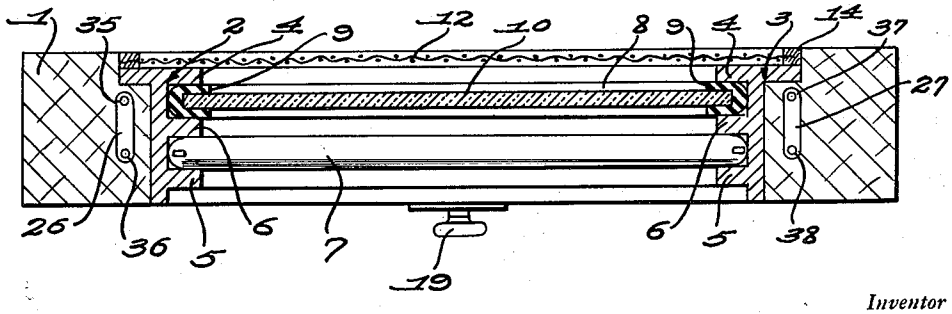

Inventor

JAMES GEA

By Clarence A. O'Brien and Harvey B. Jacobson

Attorneys

July 3, 1951 J. GEA 2,558,719

STORM WINDOW

Filed May 6, 1946 2 Sheets-Sheet 2

Fig. 5

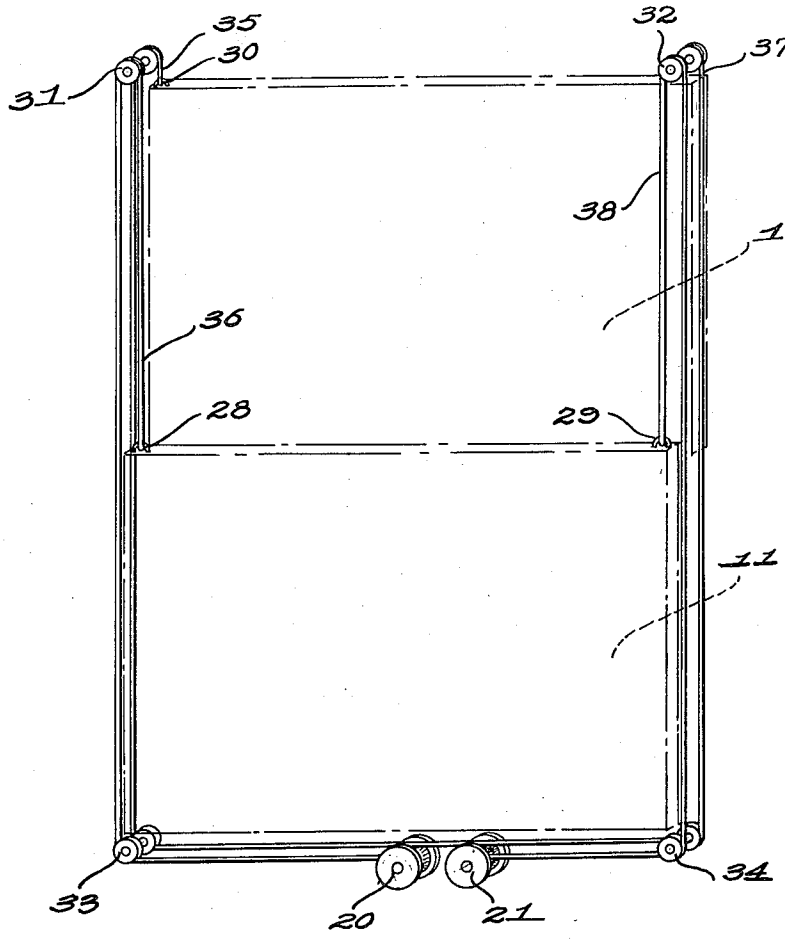

Fig. 6

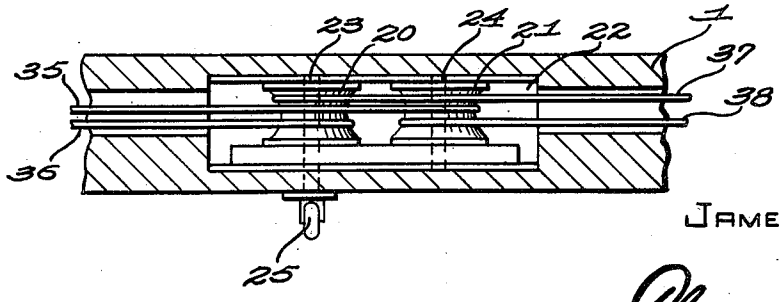

Inventor

JAMES GEA

By Clarence A. O'Brien and Harvey B. Jacobson

Attorneys

Patented July 3, 1951 2,558,719

UNITED STATES PATENT OFFICE

2,558,719

STORM WINDOW

James Gea, Joliet, Ill.

Application May 6, 1946, Serial No. 667,567

2 Claims. (Cl. 268—130)

1

This invention relates to improvements in storm windows.

An object of the invention is to provide an improved storm window which will be completely housed within a single frame structure and which will include a pair of vertically adjustable sashes, together with means for simultaneously opening or closing the sashes or window panes.

Another object of the invention is to provide an improved storm window which will be adapted to be fitted within the usual window opening and secured therein, the same being provided with sponge rubber window pane guides and with a screen portion, together with means for raising and lowering said panes by the single operation of turning an operating member in one direction or another.

A still further object of the invention is to provide an improved storm window comprising a window frame having upper and lower glass panes slidably mounted within sponge rubber guides therein, together with channels formed vertically through the opposite side frame members whereby operating cables may be secured to the upper and lower sashes in which the panes are received, whereby the upper and lower panes or sashes may be raised simultaneously and closed simultaneously.

Another object of the invention is to provide an improved storm window which will be highly efficient in operation, and relatively inexpensive to manufacture and produce.

Other objects will appear as the description proceeds.

In the accompanying drawings which form a part of this application,

Figure 1 is a perspective view of the improved storm window;

Figure 2 is a transverse sectional view taken on the line 2—2 of Figure 1;

Figure 3 is a partial sectional view looking downwardly upon the two cooperating intermeshed pulley operators;

Figure 4 is a front elevation of the intermeshed pulley operators illustrated in Figure 3 of the drawings;

Figure 5 is a perspective view showing the upper and lower sashes and their associated connection with operating pulleys for simultaneously raising or closing said sashes; and

Figure 6 is a partial sectional view looking down on a modified form of pulley operators which are connected by means of the sash cords so that they will operate together.

Like characters of reference are used throughout the following specification and the accompanying drawings to designate corresponding parts.

2

In carrying out the invention, there is provided a double frame member 1 substantially rectangular in shape, in which the sash guides 2 and 3 will be arranged at the opposite sides of said frame, forming the adjacent tracks for the vertical adjustment of the upper and lower sashes of the said storm window.

The guide members 2 and 3 are formed to provide an elongated, transversely extending portion 4 and spaced inwardly directed separating or guide strips 5 and 6, which extend the full length of the window frame and provide the guiding means for the lower and upper sashes 7 and 8, respectively.

The sashes 7 and 8 are formed with the oppositely disposed sponge rubber insulating or cushioning strips 9, in which the glass panes 10 and 11 are mounted.

A wire mesh screen 12 is provided with the frame 13 having a rubber outer surface 14 to insulate the same. It is intended that the improved storm window be secured within the window opening of a house or dwelling in any desired manner, as, for example, by temporarily fastening the same in position, or by permanently building the same in place in the window opening.

In Figures 3 and 4 of the drawings, there has been illustrated an operating means for opening and closing the sashes 7 and 8 and comprises a pair of adjacent operating rollers 15 and 16 which are formed with the toothed sprockets 17 and 18 on their forward ends, respectively, and are adapted to inter-engage each other, so that when the forwardly extending handle operator 19 formed on the inner end of the shaft with the roller 15 is turned either to right or left, suitable cables attached to said rollers will also be attached to the said upper and lower sashes so that rotation of said operator in one direction will simultaneously open the sashes, and rotation of the operating roller in the reverse direction will simultaneously close the said sashes.

In Figures 5 and 6 of the drawings, there has been illustrated a slightly modified form of roller operators, comprising the spaced rollers 20 and 21 disposed in the recess 22 in the central portion of the window frame 1, said rollers being secured to the shafts 23 and 24 extending crosswise of the said recess 22 and provided with the forwardly and inwardly extending operating handle 25 which may be rotated in either right-hand

direction or in a left-hand direction to raise and lower the sashes.

The vertically arranged channels 26 and 27 will be formed through the opposite side members of the frame 1 and will extend from the top to the bottom thereof and will be provided for receiving the operating cables which extend between the operating rollers and the said upper and lower sashes.

By regarding Figures 5 and 6 of the drawings, it will be seen that the lower sash will be provided with the eyes 28 and 29 at the opposite sides thereof on the upper surface of said sash, while the upper sash is provided with a single eye 30 on its upper left-hand edge or surface. The double sheaves or pulleys 31 and 32 will be arranged at the opposite sides of the top of the upper sash, while the double sheaves or pulleys 33 and 34 will be positioned at the opposite sides and at the bottom of the lower sash and will be adapted to support the operating cables in the following manner. Cable 35 is fastened to the top left eye on the top pane or sash and runs through the top double sheaves down through the opening in the left-hand side of the frame and around the lower double sheaves at the lower left side and is fastened to the operating roller 21. The cable 36 is fastened to the top left eye at the left side of the top of the bottom pane and runs over the double sheaves or pulley 31 and down and over the double sheaves or pulley 33, and is secured to the roller 20. The cable 37 is secured to an eye at the right-hand side of the top of the upper sash (not shown in the drawing) and extends over the double sheaves or pulley 32 and down to and around the double pulley 34 and from thence to fasten onto the roller 20. The cable 38 will be secured to the eye 29 at the right-hand top side of the lower sash and will extend upwardly and about the upper double sheaves or pulley 32 and downwardly and about the lower double sheaves or pulley 34, and will be fastened to the roller 21. It will therefore be seen that when the operating handle 25 is turned in a right-hand or clockwise direction that the upper and lower sashes will simultaneously be opened, and when the operator 25 is turned in a left-hand direction, or counter-clockwise direction, the said upper and lower sashes will be simultaneously closed.

The same hookup will be provided for the geared operating rollers, so that when the operating handle is turned to the right the windows will be opened, and when the handle is turned to the left, the windows will be simultaneously closed.

From the foregoing description, it will be apparent that there has been devised a highly efficient form of storm window which will provide the maximum amount of controlled ventilation when desired by merely rotating the operating handle 25 to open or close the upper and lower sashes simultaneously. The provision of the screen which extends the full length of the window positively prevents bugs and the like from getting into the house equipped with the improved storm window.

While the preferred embodiment of the instant invention has been illustrated and described, it will be understood that it is not intended to limit the scope of the invention thereto, as many minor changes in detail of construction may be resorted to without departing from the spirit of the invention.

Having thus described my invention, what I claim as new and desire to secure by Letters Patent of the United States is:

1. A storm window including a double frame, guide strips disposed in said frame, upper and lower frame sashes slidably mounted in said guide strips, a pair of sheaves independently rotatably journaled at each corner of said frame, a pair of operating rollers journaled in the lower portion of the double frame and having their axles in spaced parallel relation to each other, a pair of cables having their ends connected to each of said rollers and to said upper and lower sashes at each side thereof, intermediate portions of said cables being engaged over said sheaves, the cables of each pair of cables being windable in opposite directions upon their respective operating roller, said rollers being interconnected for positive opposite rotation upon rotation of one of said rollers whereby the cables connected to the lower sash will be wound on the rollers for raising the lower sash and the cables connected to the upper sash will be unwound for lowering the upper sash.

2. A storm window including a double frame, guide strips disposed in said frame, upper and lower frame sashes slidably mounted in said guide strips, a pair of sheaves independently rotatably journaled at each corner of said frame, a pair of operating rollers journaled in the lower portion of the double frame and having their axles in spaced parallel relation to each other, a pair of cables having their ends connected to each of said rollers and to said upper and lower sashes at each side thereof, intermediate portions of said cables being engaged over said sheaves, the cables of each pair of cables being windable in opposite directions upon their respective operating roller, said rollers being interconnected for positive opposite rotation upon rotation of one of said rollers whereby the cables connected to the lower sash will be wound on the rollers for raising the lower sash and the cables connected to the upper sash will be unwound for lowering the upper sash, said rollers having sprockets integrally connected thereto, said sprockets being enmeshed together for interconnecting said rollers for opposite rotation.

JAMES GEA.

REFERENCES CITED

The following references are of record in the file of this patent:

UNITED STATES PATENTS

Number	Name	Date
97,400	Hopkins	Nov. 30, 1869
528,331	Lusher	Oct. 30, 1894
733,953	Foster	July 21, 1903
838,515	Best	Dec. 18, 1906
860,518	Best	July 16, 1907
906,749	Strong	Dec. 15, 1908
1,198,138	Lovell	Sept. 12, 1916
1,946,169	MacKenzie	Feb. 6, 1934
2,291,913	Nicolai	Aug. 4, 1942