(12) INNOVATION PATENT
(19) AUSTRALIAN PATENT OFFICE

(11) Application No. **AU 2015101378 A4**

(54) Title
A Detachable Hook

(51) International Patent Classification(s)
A47G 25/06 (2006.01)

(21) Application No: **2015101378** (22) Date of Filing: **2015.09.22**

(45) Publication Date: **2015.11.05**
(45) Publication Journal Date: **2015.11.05**
(45) Granted Journal Date: **2015.11.05**

(71) Applicant(s)
Jiaxing City Qiangda CNC Equipment Co., Ltd

(72) Inventor(s)
FAN, QUANYOU

(74) Agent / Attorney
Leoniepat, 15600 W. 99th St., Lenexa, VIC, 6621

201510137822 Sep 2015

This utility model is a kind of detachable hook, which is composed of the hook with adhesive layer on the back, sliding rail vertical to the hook, and four baffles on the sliding rail. Patchwork patterns are arranged on various baffles. The hook can be exposed by pulling these baffles open. It can be used to hang clothes. After use, baffles can be closed, and become a circle. External patterns increase the aesthetic appreciation of the hook. Moreover, the hook is concealed in the baffles, resulting in better aesthetic appreciation. This device is featured by simple structure, beautiful appearance, and convenient use. When it is not used, it can be pasted to the wall as an ornament.

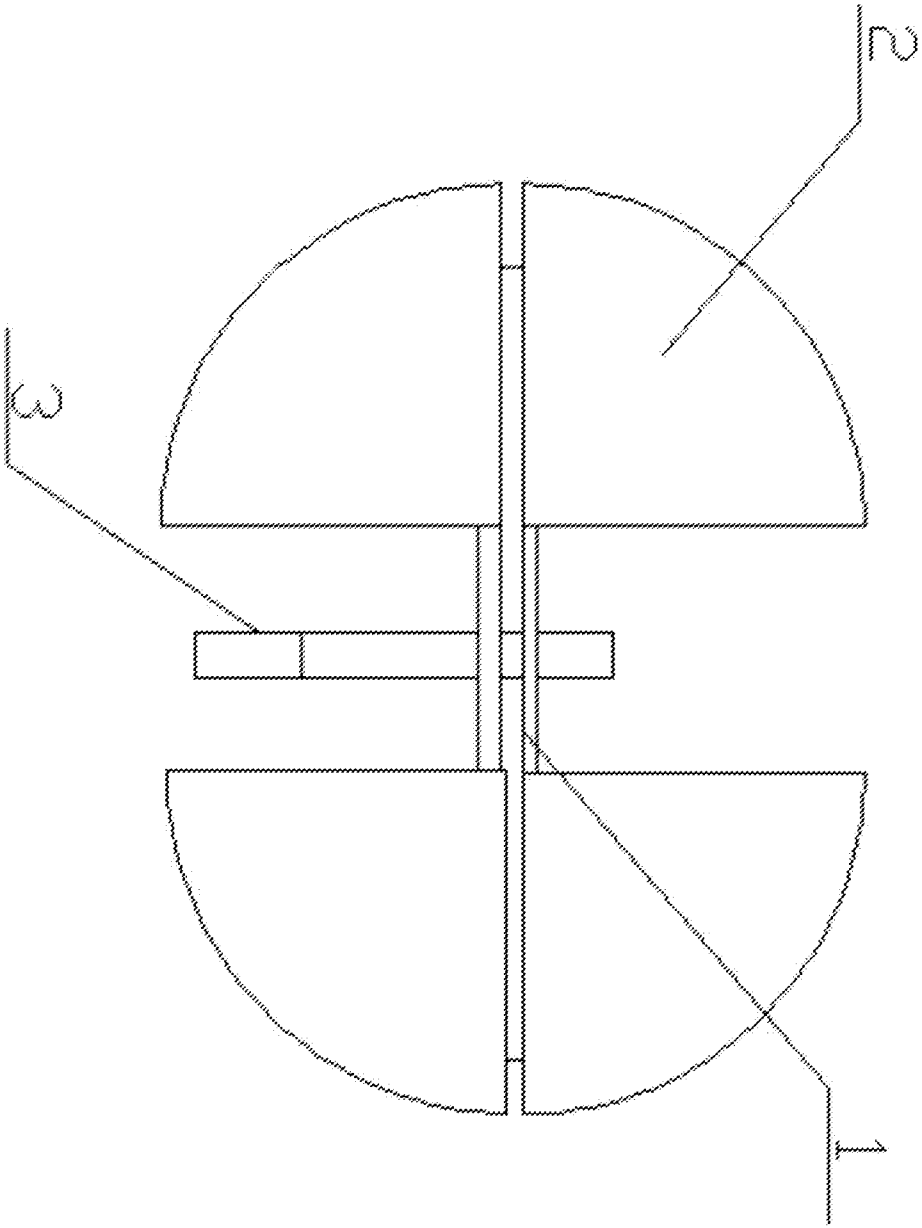
2
3
1

2015101378 22 Sep 2015

EDITORIAL NOTE

2015101378

- There are 2 pages of Description which are not page numbered

22 Sep 2015
201510137 8

A Detachable Hook

Technical Field

This utility model is a kind of detachable hook

Background Technology

Hook is frequently used in daily life. It is spoken highly of by people due to its simple structure and convenient use. However, traditional hooks are usually of poor aesthetic appreciation. The sense of indoor beauty is affected. Therefore, existing hooks need to be further improved in terms of the sense of beauty.

Description on the Invention

The technical issue to be solved by this utility model is to provide a kind of detachable hook featured by simple structure, beautiful appearance, and convenience use. When it is not used, it can be pasted to the wall as an ornament.

This utility model is realized through the following technical scheme: a kind of detachable hook including the hook with adhesive layer on the back, sliding rail vertical to the hook, and four baffles on the sliding rail. Patchwork patterns are arranged on various baffles.

As an optimized scheme, each baffle is shaped as a fan. Four baffles together form a circle.

As an optimized scheme, a rectangular groove is arranged respectively at the rear of the two baffles at the lower part.

Beneficial effects of this utility model are described as follows: The hook can be exposed by pulling these baffles open. It can be used to hang clothes. After use, baffles can be closed, and become a circle. External patterns increase the aesthetic appreciation of the hook. Moreover, the hook is concealed in the baffles, resulting in better aesthetic appreciation. This device is featured by simple structure, beautiful appearance, and convenient use. When it is not used, it can be pasted to the wall as an ornament.

Description on the Attached Figure

For easy description, this utility model is described in detail with the following specific implementation cases and attached figures.

Fig. 1 shows the use state of this utility model.

Fig. 2 shows the rear view of the lower baffle.

Specific Implementation Mode

As shown in Fig. 1 and Fig. 2, this utility model is a detachable hook including the hook (3) with adhesive layer on the back, sliding rail (1) vertical to the hook (1), and four baffles (2) on the sliding rail (1). Patchwork patterns are arranged on various baffles (2).

Each baffle (2) is shaped as a fan. Four baffles (2) together form a circle. A rectangular groove (4) is arranged respectively at the rear of the two baffles (2) at the lower part.

201510137822 Sep 2015

The hook (3) can be exposed by pulling these baffles (2) open. It can be used to hang clothes. After use, baffles (2) can be closed, and become a circle. External patterns increase the aesthetic appreciation of the hook (3). Moreover, the hook (3) is concealed in the baffles (2), resulting in better aesthetic appreciation.

Beneficial effects of this utility model are described as follows: This device is featured by simple structure, beautiful appearance, and convenient use. When it is not used, it can be pasted to the wall as an ornament.

Above paragraphs are only about the specific implementation mode of this utility model. However, the scope of protection of this utility model is not limited to this description. Any change or replacement without creative work should be covered in the scope of protection of this utility model. Therefore, the scope of protection defined in the Claims prevails for that of this utility model.

2015101378 22 Sep 2015

EDITORIAL NOTE

2015101378

- There is 1 page of Claims which is not page numbered

22 Sep 2015
201510137 8

1. This kind of detachable hook has the following characteristics: including the hook with adhesive layer on the back, sliding rail vertical to the hook, and four baffles on the sliding rail. Patchwork patterns are arranged on various baffles.
2. According to the detachable hook stated in Claims 1, its characteristics are described as follows: each baffle is shaped as a fan. Four baffles together form a circle.
3. According to the detachable hook stated in Claims 1, its characteristics are described as follows: a rectangular groove is arranged respectively at the rear of the two baffles at the lower part.

2015101378 22 Sep 2015

EDITORIAL NOTE

2015101378

- There are 2 pages of Drawings which are not page or figure numbered

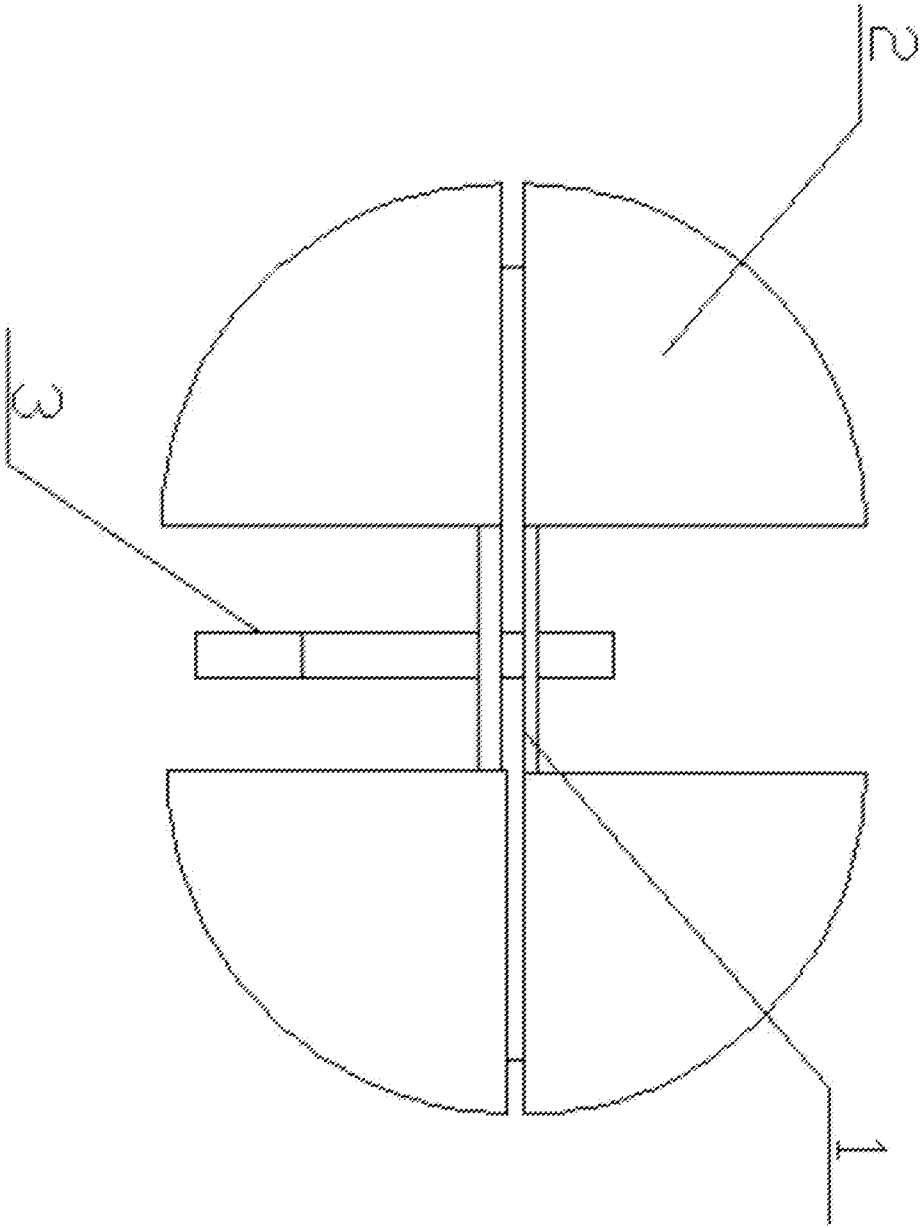
2
3
1

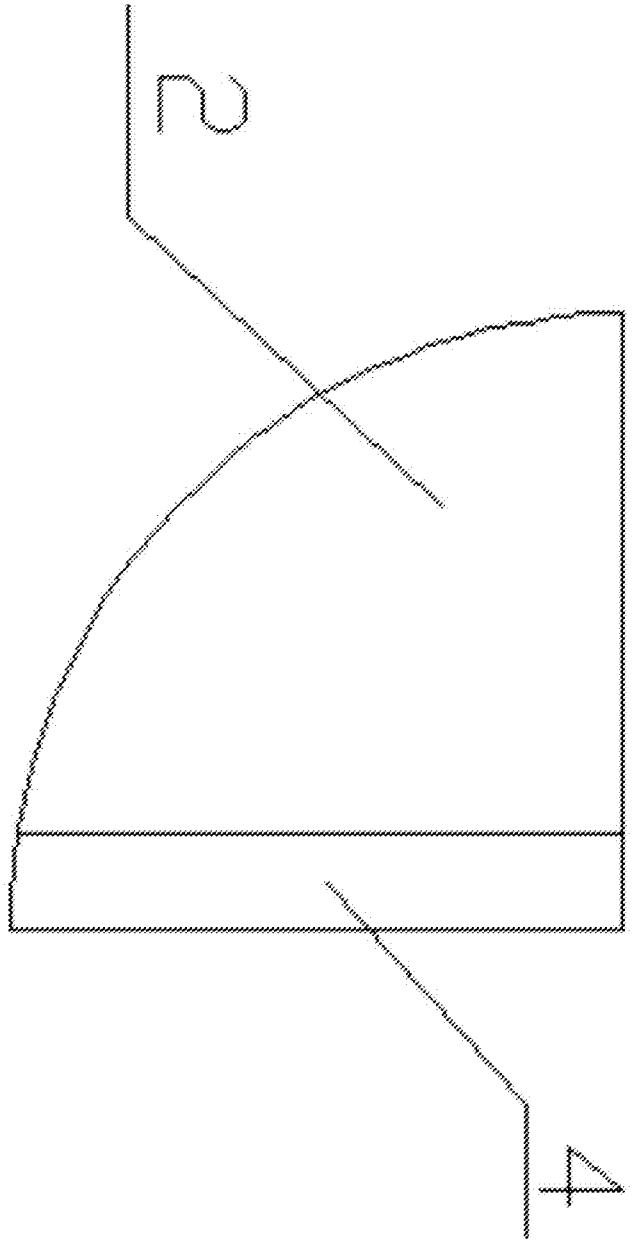
2
4