Nov. 28, 1939. D. KATZ 2,181,134

LECTURE AND PROJECTION DESK

Filed Nov. 21, 1938 2 Sheets-Sheet 1

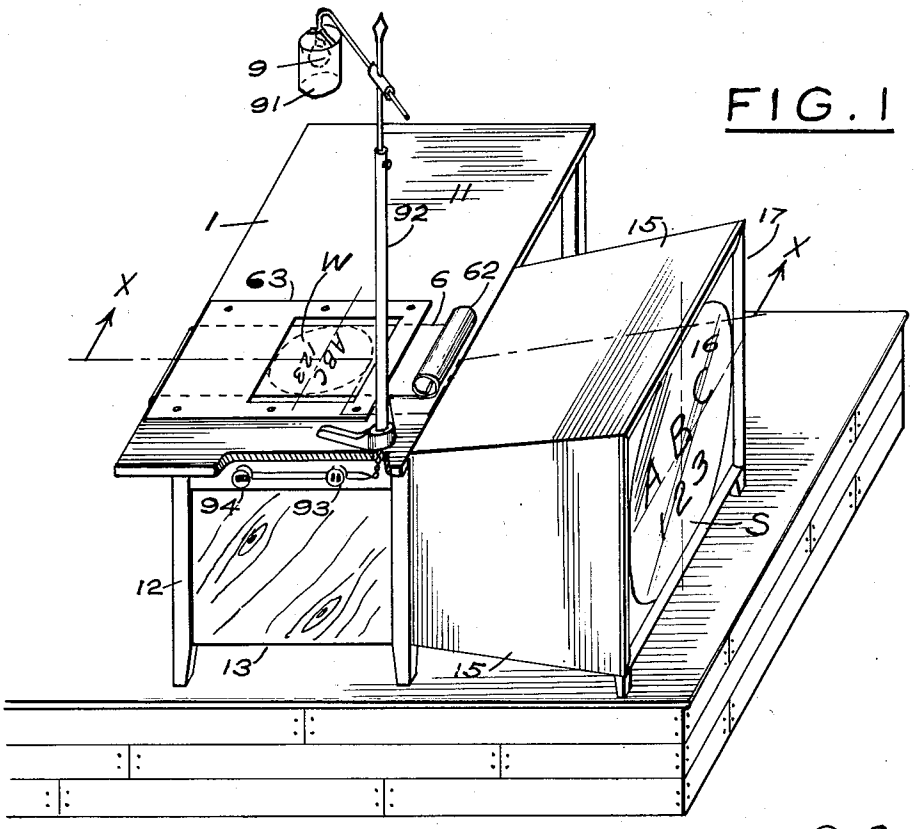

FIG. 1

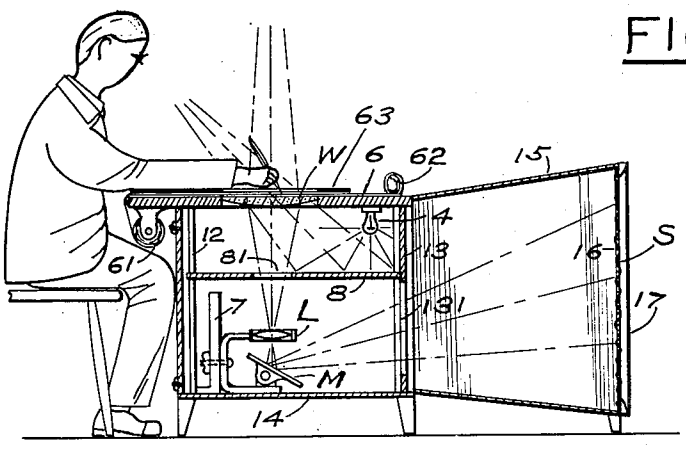

FIG. 2

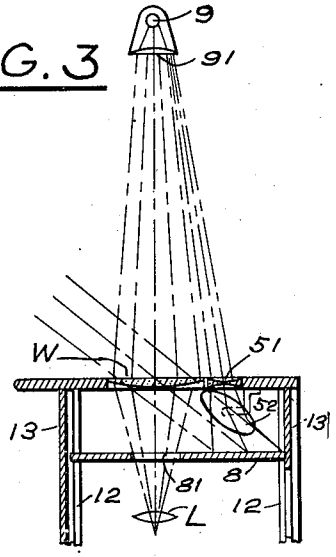

FIG. 3

David Katz.

INVENTOR

Nov. 28, 1939. D. KATZ 2,181,134

LECTURE AND PROJECTION DESK

Filed Nov. 21, 1938 2 Sheets-Sheet 2

FIG. 4.

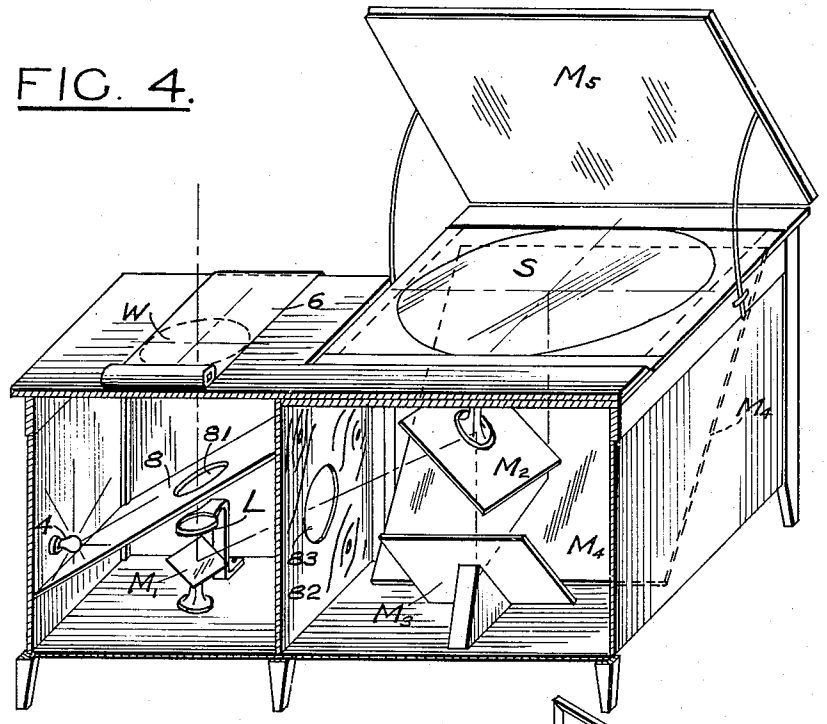

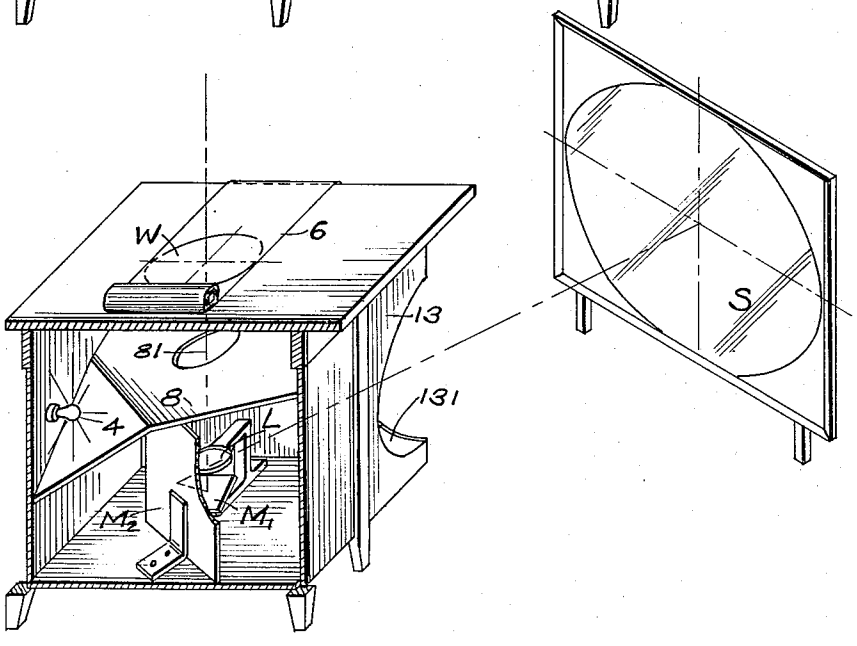

FIG. 5.

David Katz.

INVENTOR

Patented Nov. 28, 1939 2,181,134

UNITED STATES PATENT OFFICE

2,181,134

LECTURE AND PROJECTION DESK

David Katz, Wilmington, Del.

Application November 21, 1938, Serial No. 241,530

3 Claims. (Cl. 88—24)

This invention relates to new and useful improvements in lecture and projection desks of the type described in my copending applications, Ser. No. 155,390 and 192,755, of which this application is a continuation-in-part.

In my said copending applications, I have described a combination lecture desk and projection table whose principal distinguishing characteristic is that it possesses facilities whereby writing done on the top of the desk by a lecturer is simultaneously projected through the interior of the desk upon a substantially vertical screen, facing the audience. Briefly speaking, said combination, which will for brevity hereinafter be referred to as a Scriptoscope, comprises the following essential parts. A lecture table having a side and walls of opaque material, forming a substantially inclosed dark chamber, is provided in the top thereof with a transparent writing panel having a flat surface, preferably a plano-convex lens. Above this panel, exterior to the desk chamber, is provided a flood light or other convenient source of illumination, which is adapted to direct a concentrated beam of light through said transparent panel into the interior of the desk. Within said interior, below the writing panel, and in position to intercept the rays of light coming downwards through the latter, is a projection system comprising a focusing lens and a mirror or a system of mirrors, adapted to redirect, focus and project upon a translucent vertical screen, usually a sheet of fabric, any light rays and shadow rays coming from the writing plane.

When the lecturer writes in ink or pencil on the writing panel, the writing is thus focussed upon the translucent screen, and goes through said screen to face the audience, which in turn faces the lecturer.

The writing may be done by the lecturer directly on the flat upper surface of the writing panel, but it is preferable to employ a sheet of transparent paper or other light transmitting material, which is stretched flat against the writing panel, and which may be moved out of the operating region when used up and replaced by a fresh sheet from a convenient supply.

My present invention has for its object to improve the Scriptoscope as regards its adaptability for using such overstretched sheets of transparent writing material, thereby further improving the clearness of projection and enhancing the difference between light and shadow on the projection screen. It is a further object of this invention to improve the Scriptoscope whereby to render its utility more agreeable to the lecurer himself. Other and further important objects of the invention will appear as the description proceeds.

In the course of experimentation with the said Scriptoscope I have discovered that for the purpose of clearness and best visibility of the projection to the audience, it is desirable to have the writing paper on top of the writing panel as transparent as possible, and the writing medium as opaque as possible. Best results are obtained with transparent cellulosic sheeting, for instance "Cellophane", using black India ink, "Scrip", or ordinary fountain pen ink as the writing medium.

Of course the non-moisture proof variety of Cellophane is to be selected, since the moisture proof variety refuses to "take" aqueous inks.

I have found, however, that the use of Cellophane or similar smooth material of high transparency is hard on the eyes of the lecturer. In the first place, the smooth surface of the Cellophane under the concentrated flood light reflects a painful glare into the eyes of the lecturer. Secondly in spite of its intense illumination, the stretch of Cellophane over the writing panel appears very dark, almost black. The writing thereon, in dark colored ink, is therefore barely visible to the writer himself, and the latter has to strain his eyes very badly to see what his hand is producing on the paper.

Now according to my present invention, both of the above difficulties are overcome simultaneously by lighting up the interior of the desk chamber, so that the walls and floor thereof may form an illuminated background to the transparent writing panel when looked upon by the lecturer in his normal sitting or standing position. The idea of lighting up the interior of the projection desk appears at first paradoxical and contrary to logical prediction. It was to be expected that lighting up the chamber from inside would "dilute" the shadows falling upon the screen and weaken the visibility of the projection to the audience. I find, however, to my surprise, that the damaging effect is not substantial, and is more than offset by the increase in clearness due to the use of Cellophane. Furthermore, the last trace of this damage can be removed by judicious use of partitions, as more fully explained below.

Referring now to the drawings, which are to be regarded as an integral part of this description—

Fig. 1 is a perspective view, partly in section, of a Scriptoscope forming the principal object of the invention.

Fig. 2 is a vertical section of Fig. 1, along the broken line X—X.

Fig. 3 is a vertical section of a part of the Scriptoscope, showing a different embodiment of this invention.

Fig. 4 is a perspective view of a different embodiment of the Scriptoscope, with the front wall removed, to expose the interior.

Fig. 5 is a perspective view showing the application of this invention to a lecture projection

table using a separate projection screen, that is, one which does not form an integral part of the table.

Considering now these figures in detail and referring in particular to Figs. 1 and 2, 1 represents a table of the customary style having a top member 11, legs 12, side walls 13, 13 and a floor 14, joined together to form a substantially inclosed dark chamber. The table is however provided with an extension 15 forming a hollow chamber and having the front thereof covered by a vertical screen S of translucent material 16, preferably a sheet of woven cotton or silk fabric, held in place by a suitable frame 17. The chamber of extension 15 communicates with the chamber formed by the desk proper through the opening 131 in the intervening partition 13 forming one of the walls of the desk.

In the top of the desk a portion is cut away and replaced by a transparent writing panel W. This writing panel may be a plane sheet of glass; but in the preferred embodiment of the invention it is composed of a large plano-convex lens, say 6 to 18 inches in diameter, having its plane face substantially flush with upper surface of the table top.

Above the writing plane, exteriorly to the desk, is a source of illumination, which in the preferred embodiment comprises an electric lamp 9, preferably of the "spot light" type; a condensing lens 91 and a suitable support 92. Electric wiring members 93 and switch 94 may also be attached to the desk for convenience for the lecturer. The source of illumination is thus designed and positioned to throw a concentrated beam of light through the writing panel into the interior of the desk chamber.

Within said chamber beneath the writing plane and directly within the path of the concentrated beam of light is a focussing lens L and a mirror M, supported conveniently and adjustably on a support 7. The mirror M is so positioned as to intercept the rays of light, break their direction and throw them upon the screen S, producing there a substantially circular projection background, corresponding to the shape of the writing panel W. The lens L in turn is so selected that it forms a sharp focus upon S of any points of light and shadow originating in the writing plane W.

Thus far, the elements enumerated form the essential parts of any Scriptoscope according to my previous applications for patent above referred to. This may also be said of the sheet of writing material 6, which unrolls from a supply 61, onto a roll 62, passing in the meantime over the upper surface of the writing panel W. The roll 62 may by its sheer weight hold the paper flat against the writing plane W, but to increase this effect, as well as to keep the lower portion of the sheet clean, a cardboard 63 may be tacked onto the table directly over the paper, with a cut-away opening in the zone of the writing panel W.

Now, according to this invention, it is preferred to select this sheet of paper 6 from among highly transparent cellulosic sheeting materials. Non-moistureproof Cellophane constitutes an ideal writing paper for this purpose in view of its high transparency and ready flexibility. A heavier sheet, however, for instance a sheet of Celluloid may also be employed, the writing being rubbed off with a wet sponge after use, if desirable, for reuse of the sheet.

Further according to this invention an auxiliary lamp 4 is placd within the desk chamber, under the top 11, forwardly so as to light up those portions of the inner walls of the desk which are directly opposite the lecturer's eyes as he looks through the writing panel W from his normal position which he would take for writing on said writing panel. The exact position of this lamp is immaterial, but it is obviously better to locate it somewhat to the right of the writing panel as viewed from the lecturer's position.

To assist in forming a good background for illumination, as well as to assist in preventing the light from the auxiliary lamp 4 from falling upon the screen S, a partition 8 is inserted within the desk chamber, so as to divide the latter into two parts. This partition may be horizontal or inclined; but it is provided with an opening 81 for passing the concentrated beam of light from the writing panel W to the focussing lens L. Since the wall 13 between the desk and its extension, with its opening 131, itself serves as a partition, the partition 8 is not essential, and may be omitted.

Auxiliary lamp 4 is preferably wired into the circuit of lamp 9 so that a single switch lights up both of them. The lecturer thus always views the Cellophane as projected against an illuminated background. He then can readily see his own writing, without eye strain and without suffering from undue glare. In an experimental model I have obtained satisfactory results using for lamp 9 a "spot-light" of 100 watts, and for auxiliary lamp 4 an ordinary bulb of 15 or 25 watts.

In Fig. 3 is shown a modification of this invention wherein the light for illuminating the interior of the chamber is drawn directly from the spot-light 9. In this figure, as in the preceding one, an auxiliary partition 8 is preferably employed. But instead of placing a lamp 4 in the upper chamber formed thereby, an auxiliary opening is cut into the top of the desk and is filled by a divergent lens 51. This opening and divergent lens are inserted in proximity to the writing panel and preferably near the left-hand, forward corner thereof, so as to intercept part of the beam of light coming downwards from lamp 9. A mirror 52 is then located within the chamber, underneath said divergent lens and in an inclined position, so as to intercept the rays coming through said divergent lens and to throw them upon the interior walls of the upper chamber in the neighborhood of the right hand, forward corner thereof.

In Fig. 4, the improvement of this invention is applied to a different modification of the Scriptoscope. In this embodiment, the projection screen is not directly in front of the lecturer, but rather to one side of him, and is disposed not in a vertical position, but rather horizontally. The audience then views the projection not directly on the projection screen S, but by its reflection in a mirror M_5 standing over the top desk at an angle of 50 to 60 degrees thereto.

In this modification, the concentrated beam of light coming downwards through the writing panel passes through opening 81 in partition 8, then through the focussing lens L, and impinges upon the plane mirror M_1. This one, however, is inclined so as to deflect the beam sideways, to the lecturer's left. The beam then passes through opening 83 of an auxiliary partition 82 (which is not essential) and strikes another plane mirror M_2, which is parallel to mirror M_1. The beam of light is then deflected downwards, parallel to its

initial direction, but here it promptly strikes mirror M_3, which deflects rearwards into mirror M_4, from which in turn it is finally deflected upwards and caused to impinge upon the horizontal, translucent screen S, where it makes a substantially circular image of the writing panel. The reflection of this projected area in the upper mirror M_5, is substantially vertical (inclining, however, from 10 to 30 degrees rearwards), and presents to the audience the writing done on the writing panel in correct orientation for reading.

This design has several distinct advantages; for instance, the writing can be read conveniently by the audience without placing the Scriptoscope on a platform, and by adjusting the angle of the mirror M_5, the observed plane of projection can be tilted backwards to any desired angle, say from 10 to 30 degrees. This in itself is a very advantageous feature, as explained more fully in my copending application Ser. No. 246,555, filed December 19, 1938. The use of a Cellophane roll 6, and of auxiliary lamp 4, is substantially the same as in the embodiment of Figs. 1 and 2.

In Fig. 5 the principle of this invention, that is the use of Cellophane as writing medium and of auxiliary lamp 4 to overcome its inherent objections, is applied to a projection apparatus, wherein the projection screen is not part of the lecture desk. Instead of a "through" projection screen an "unto" projection screen is employed, and this is placed at a convenient position to the rear and to one side of the lecturer. The beam of concentrated light coming downwards from lens W, passes through opening 81 in partition 8, then through focussing lens L; then onto inclined plane mirror M_1, which reflects it upon vertical plane mirror M_2. The latter finally directs the beam of light through an opening 131 in the walls 13 of the desk on to screen S, which, as said above is an opaque or silvered screen.

It will be understood that my invention is susceptible of wide variation and modification without departing from the spirit thereof. For instance, instead of lamp 4 or divergent lens 51 for illuminating the interior, one may simply resort to the use of a window in any convenient position in the upper interior chamber above partition 8. This window may be placed so as to illuminate the requisite portion of the interior walls opposite the writing panel W from the viewpoint of the writer. Or the window itself may be placed directly opposite the writing plane, so that the lecturer will look through both writing plane and window into the lit room-space beyond.

If desired, a sheet of light-polarizing, transparent material may be inserted between the flood light 9 and writing panel W, to further assist in cutting down the glare from the lecturer's viewpoint. Other variations and modifications in my invention will be readily apparent to those skilled in this art.

I claim as my invention:

1. In combination with a lecture desk having a light transmitting panel in the top thereof adapted to serve as a support for a sheet of transparent writing material and cooperating with an external source of light, with a focussing system and with a projection screen to transmit into the interior of said desk and project upon said screen images of writing done on said writing material, means above said table top for sending a concentrated beam of light downwards through said light transmitting panel in the direction of said focussing system, and further means underneath said table top to illuminate said transparent panel and writing material from the underside thereof by diffused light passing through said panel at a substantial angle to said first mentioned beam and directed in general toward the eyes of a person situated for convenient writing on said writing material, whereby said transparent writing material shall appear to a person writing thereon as projected against an illuminated background.

2. In combination with a lecture desk, a transparent condensing lens in the top thereof having an upper flat surface adapted to support a sheet of transparent writing material; a source of illumination above said desk adapted to direct onto said condensing lens, and through it into the space underneath said desk top a beam of concentrated light; a projection screen; a focussing and light directing system including at least one lens and at least one mirror adapted to intercept said concentrated beam of light coming downwards through said writing panel and to focus it upon said projection screen; means for illuminating said condensing lens from the underside thereof upwards, whereby said lens, writing material and the writing done thereon may be directly visible to a person spaced near the desk in position to write on said writing material; and an opaque partition having a hole therein located in the space underneath said table top and shaped to transmit to the focussing system the concentrated beam of light passing downwards through said transparent condensing lens but to prevent substantially any light from said second means of illumination from being transmitted through said focussing system to said projection screen.

3. In combination with a lecture desk having a top and walls of opaque material, a transparent condensing lens in the top thereof having an upper flat surface adapted to support a sheet of transparent writing material; a source of illumination above said desk adapted to direct onto said condensing lens, and through it into the space underneath said desk-top a beam of concentrated light; a projection screen; a focussing and light directing system including at least one lens and at least one mirror adapted to intercept said concentrated beam of light coming downwards through said writing panel and to focus it upon said projection screen; a source of light underneath said desk-top disposed to illuminate the interior walls of said desk in alignment with said transparent condensing lens, as viewed by a person writing on said writing material over the upper surface of said condensing lens, whereby said writing done by said person shall appear to him projected against an illuminated background; and an opaque partition within the interior of said desk, located below said last mentioned source of light; said partition having an opening therein for transmitting through the interior of said desk to said projection screen the concentrated beam of light passing downwards through said transparent condensing lens, but otherwise shaped and disposed to prevent substantially any light from said internal source of light from reaching said projection screen.

DAVID KATZ.