(12) UK Patent Application (19) GB (11) 2532905 (13) A

(43) Date of Reproduction by UK Office 01.06.2016

(21) Application No: 1603676.6

(22) Date of Filing: 04.09.2014

Date Lodged: 03.03.2016

(30) Priority Data:
(31) 201310396866 (32) 04.09.2013 (33) CN

(86) International Application Data:
PCT/CN2014/085911 Zh 04.09.2014

(87) International Publication Data:
WO2015/032336 Zh 12.03.2015

(71) Applicant(s):
Wan Zhi Liang
394-4 Xiao Shun Street, San Min District,
Kaohsiung City, Taiwan

(72) Inventor(s):
Xin Cheng Lin

(74) Agent and/or Address for Service:
Alpha & Omega
Chine Croft, East Hill, OTTERY ST. MARY, Devon,
EX11 1PJ, United Kingdom

(51) INT CL:
A61C 15/04 (2006.01) *A61C 15/02* (2006.01)

(56) Documents Cited:
CN1029492466A
CN1146323A
CN2130512Y
CN201422933Y
US2011073131A1
US5280797A

(58) Field of Search:
INT CL A61C
Other: CNKI, CNPAT, WPI, EPODOC.

(54) Title of the Invention: **Improved dental floss pick structure**
Abstract Title: **Improved dental floss pick structure**

(57) Disclosed is an improved dental floss pick structure, comprising a gripping portion (1) and a dental floss portion (2) connected to a front end of the gripping portion (1), wherein the dental floss portion (2) comprises a cross-rod (20), two end rods (21) formed at two ends of the cross-rod (20), and a dental floss (22) connecting the two end rods (21). The two end rods (21) are bent towards the same side to form a curved shape, and a transition portion (3) is formed between the gripping portion (1) and the cross-rod (20) such that the boundary (10) of the upper end of the gripping portion (1) and the central line (23) of the top surface of the cross-rod (20) are in the same line. Mainly by means of bending the two end rods (21) of the dental floss portion (2) to form a curved shape, the improved dental floss pick structure can reach into a tooth gap which is further in the mouth without the need to open the mouth too wide, so that better comfort can be obtained and food residues in the tooth gap can be removed.

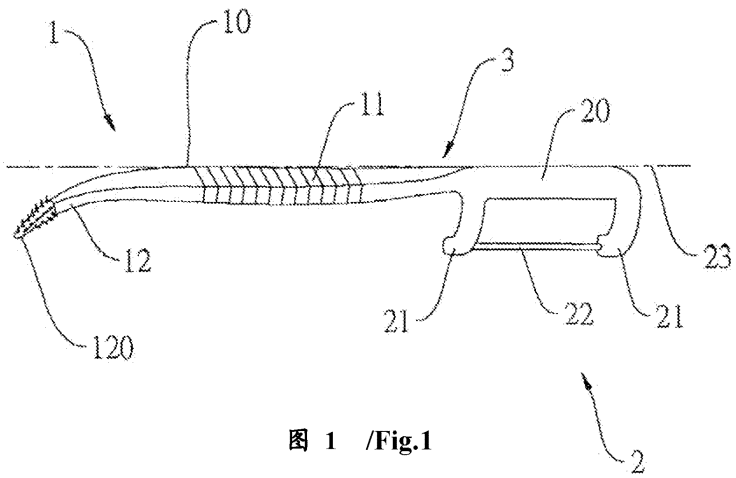

图 1 /Fig.1

GB 2532905 A

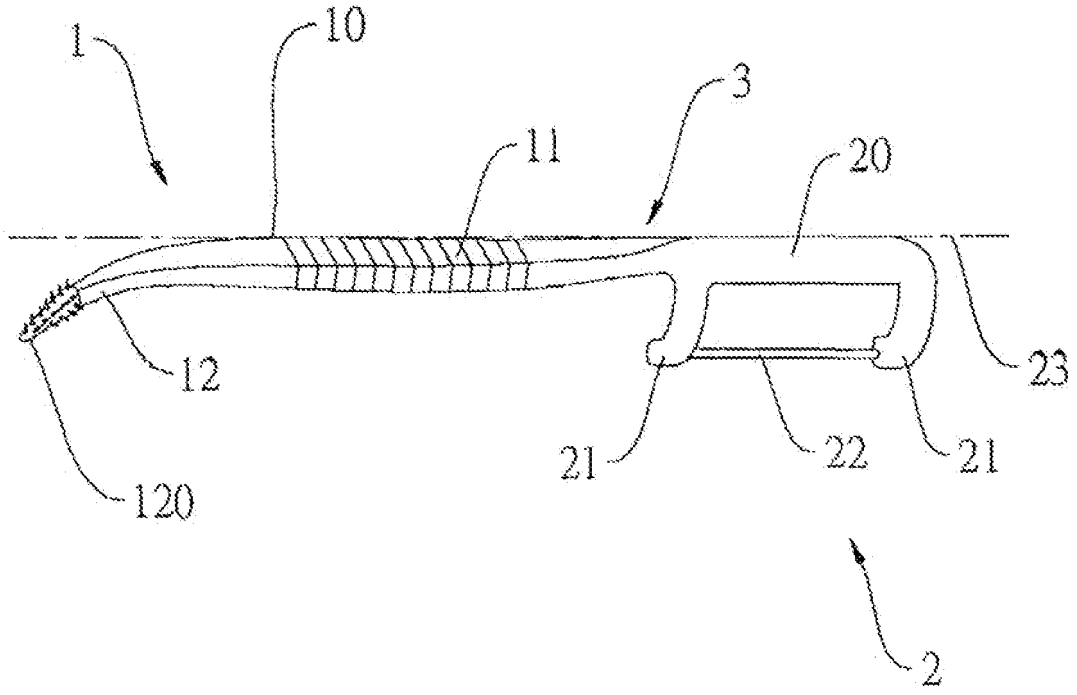

1

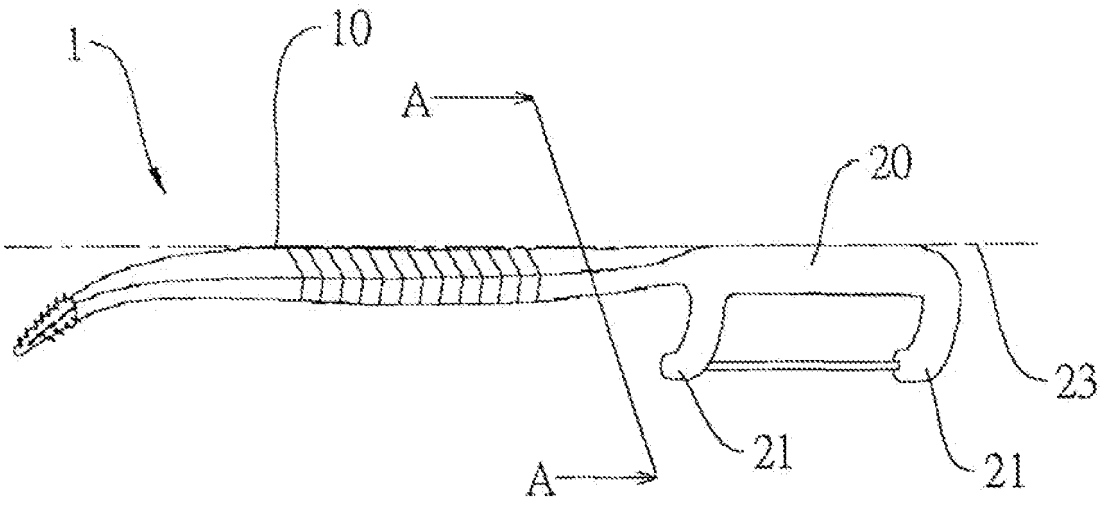

2

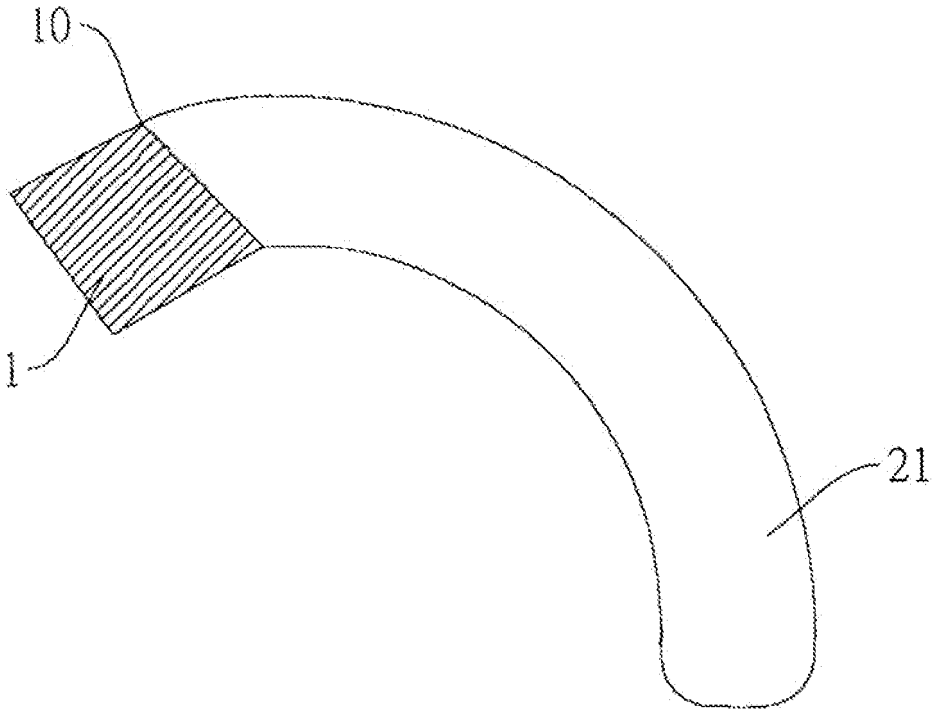

3

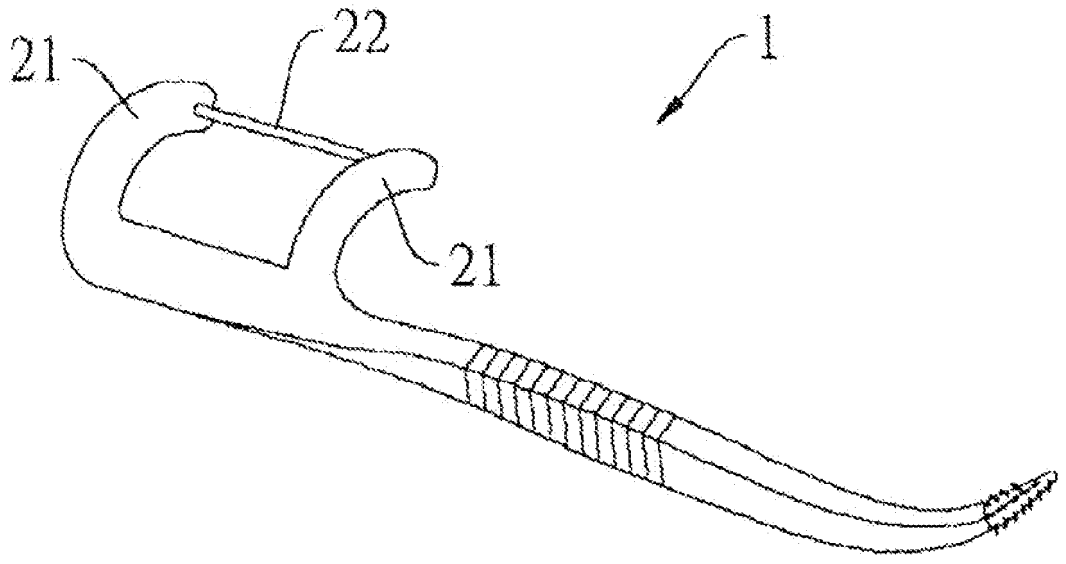

4

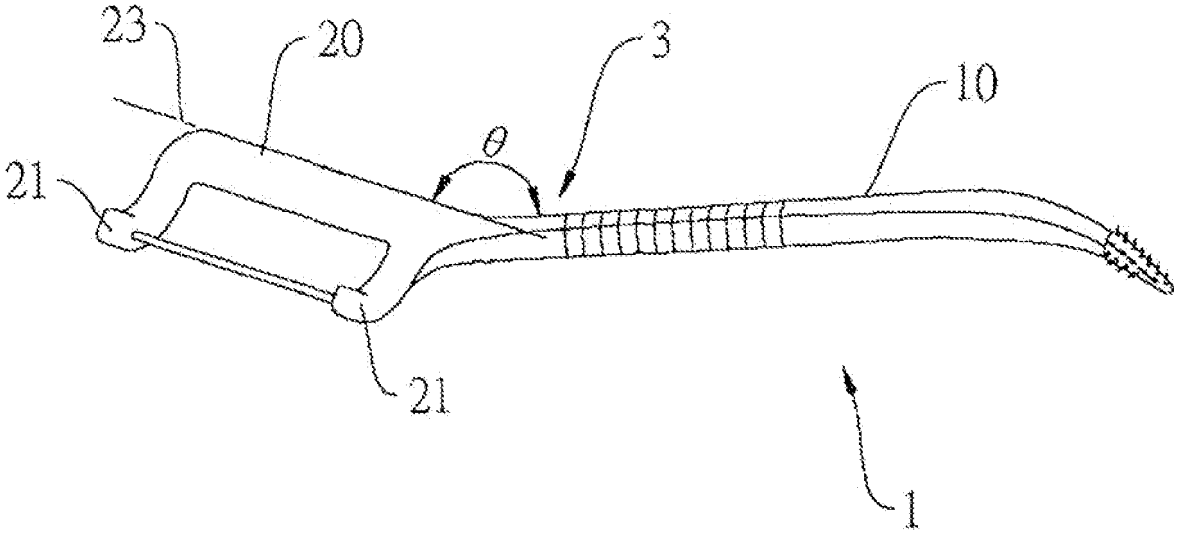

5

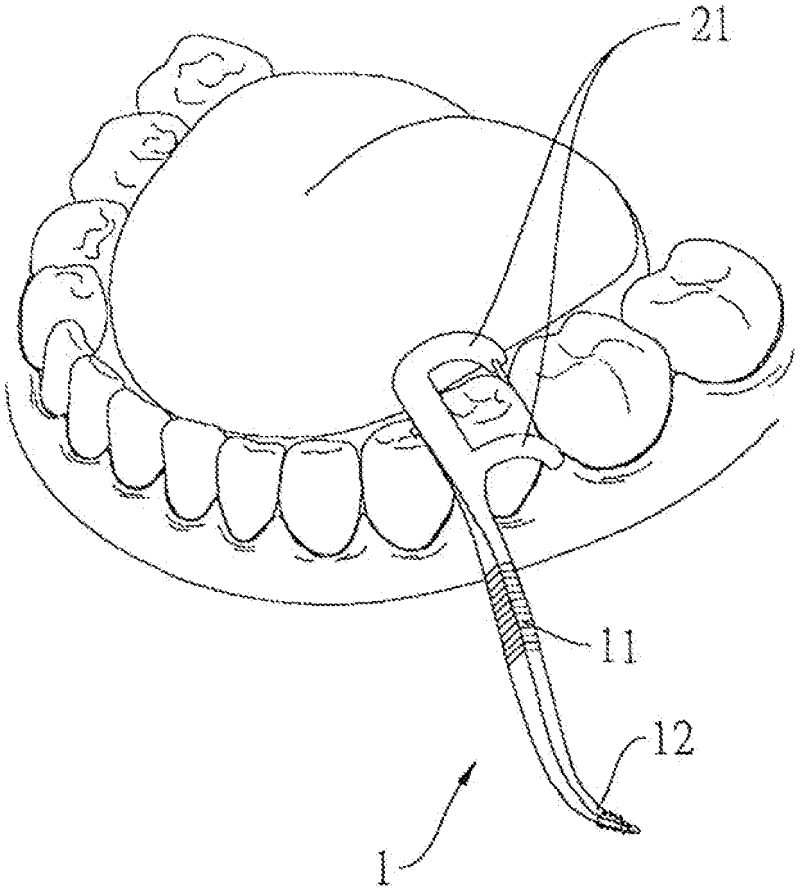

6

PATENT SPECIFICATION

【TITLE】Dental floss pick

【TECHNICAL FIELD】

The present invention relates to a type of dental floss pick, more specifically, an improved structure of dental floss pick that mainly allows users conveniently to better clean diastemata near molar teeth at the back of the mouth and feel more comfortably while using the floss picks.

【DESCRIPTION OF PRIOR ART】

Currently, for the personal Oral hygiene habit, the cleaning methods for teeth usually are to rinse the mouth with mouthwash liquid, brush teeth with the toothpaste and toothbrush directly, or use the dental floss pick, interdental brush, or the dental floss to remove food particles and dental plaques from between teeth. However, the critical method to prevent teeth from tooth diseases or cavities is to clean up food plaques from between teeth. Thus, among the aforementioned dental cleaning methods, using the dental floss pick is the most effective one to remove food plaques.

Generally, one end of the body of a regular dental floss pick has a F-shaped or Y-shaped structure with two prongs extending from the body where a floss piece is mounted in between for users to remove food and dental plaques from diastemata. However, users frequently find themselves having difficulty to use a F-shaped or Y-shaped dental floss pick to clean diastemata located at the back of the mouth. Such inconvenience may reduce the frequency of using dental floss picks as a whole.

【SUMMARY】

The main objective of the present invention is to provide an improved structure of dental floss pick with the F-shaped structure bent in an arc shape holding both ends of the floss piece that allows users to reach diastemata in the back of the mouth easier so that users do not need to wide open their mouths. Therefore, users feel more comfortable while using the dental floss picks and are able to remove food particles completely.

In order to achieve the aforementioned objective, the present invention is to provide an improved structure of dental floss pick that mainly comprises a holding portion and a floss portion which is connected with the front end of the holding portion. The floss portion comprises a bridge rod, two prongs, extending from both ends of the bridge rod separately, and a floss piece, connecting between two prongs, wherein the two prongs bend to the same side in an arc shape; a turning portion, formed between the holding portion and the bridge rod, makes the edge line of the upper part of the holding portion is aligned with the centerline of the top surface of the bridge rod;

the floss piece and the holding portion are in the same surface but not aligned;

a slipperiness preventing slope is formed on each side surface of the holding portion wherein two side surfaces of each pair are opposite to each other separately;

a toothpick portion is formed at the end of the holding portion and a tilting tip made of soft material is set on the toothpick portion.

An improved structure of dental floss pick mainly comprises a holding portion and a floss portion which is connected with the front end of the holding portion. The floss portion comprises a bridge rod, two prongs, extending from both ends of the bridge rod separately, and a floss piece, connecting between two prongs, wherein the two prongs bend to the same side in an arc shape; a turning portion, formed between the holding portion and the bridge rod, makes

the edge line of the upper part of the holding portion to extend to the centerline of the top surface of the bridge rod with an angle;

the floss piece and the holding portion are in the same surface but not aligned;

a slipperiness preventing slope is formed on each side surface of the holding portion wherein two side surfaces of each pair are opposite to each other separately;

a toothpick portion is formed at the end of the holding portion and a tilting tip made of soft material is set on the toothpick portion.

By creating the aforementioned structure, the improved structure of dental floss pick of the present invention has the following advantages:

1. By having two prongs bending to the same side in an arc shape, the improved structure of dental floss pick of the present invention allows users to better clean diastemata at the back of the mouth, feel more comfortably while using the floss picks, and achieve a better effect of preventing dental diseases and cavities.

2. By having a slipperiness preventing slope formed on each side surface of the holding portion wherein two side surfaces of each pair are opposite to each other separately, the improved structure of dental floss pick of the present invention offers users a better and easier way of holding the dental floss pick, whereas a toothpick portion formed at the end of the holding portion is an additional device for cleaning diastemata as well, so that the dental floss pick achieves a better effect of preventing dental diseases and cavities.

3. By having a toothpick portion made of a soft material and a tilting tip formed at the end of the holding portion, the improved structure of dental floss pick of the present invention can completely remove food particles from diastemata and will not damage teeth.

【BRIEF DESCRIPTION OF THE DRAWINGS】

Fig. 1: A three dimensional schematic diagram (1) of the improved structure of dental floss

pick of the present invention;

Fig. 2: A schematic diagram having a A-A cutting plane line of the improved structure of dental floss pick of the present invention;

Fig. 3: A cross-sectional view of the schematic view of the improved structure of dental floss pick of the present invention described in Fig. 2 along the A-A cutting plane line;

Fig. 4: A three dimensional schematic diagram (2) of the improved structure of dental floss pick of the present invention;

Fig. 5: A three dimensional schematic diagram (3) of the improved structure of dental floss pick of the present invention;

Fig. 6: A three dimensional schematic diagram of the embodiment of the improved structure of dental floss pick of the present invention;

【DETAILED DESCRIPTION OF PREFERRED EMBODIMENTS】

The following detailed descriptions and figures are exemplary embodiments for better understanding the objective, effect, and characteristics of the present invention.

Please refer to Fig. 1 to Fig. 3. According to the figures, the improved structure of dental floss pick of the present invention mainly comprises a holding portion 1 and a floss portion 2 which is connected with the front end of the holding portion 1. The floss portion 2 comprises a bridge rod 20, two prongs 21, extending from both ends of the bridge rod 20 separately, and a floss piece 22, connecting between two prongs 21, wherein the two prongs 12 bend to the same side in an arc shape; a turning portion 3, formed between the holding portion 1 and the bridge rod 20, makes the edge line of the upper part of the holding portion 1 is aligned with the centerline of the top surface of the bridge rod 20;

In addition to the aforementioned elements, a slipperiness preventing slope 11 formed on

each side surface of the holding portion 1 of the present invention, wherein two side surfaces of each pair are opposite to each other separately. A toothpick portion 12 is formed at the end of the holding portion 1 and a tilting tip 120 made of soft material is set on the toothpick portion 12, so that teeth will not be damaged while being cleaned.

Please refer to Fig. 4. According to the figure, the two prongs 21 of the present invention mainly are designed to bend to the same side in an arc shape. Therefore, the two prongs 21 can also bend to the other side in an arc shape to form another design. Furthermore, the floss piece 22 and the holding portion 1 are in the same surface but not aligned.

Please refer to Fig. 5. The improved structure of dental floss pick of the present invention can be designed to another form wherein the two prongs 21 bend to the same side in an arc shape and a turning portion 3 is formed between the holding portion 1 and the bridge rod 20, having the edge line 10 of the upper part of the holding portion 1 to extend to the centerline of the top surface of the bridge rod 20 with an angle θ, so that when users easily hold and use the present invention due to the design of adding the angle.

Please refer to Fig. 6. According to the figure, by having two prongs 21 bending to the same side in an arc shape, the present invention allows users to feel more comfortably while cleaning diastemata at the back of the mouth and to achieve the effect of cleaning diastemata and preventing dental diseases and cavities.

Furthermore, by having a slipperiness preventing slope 11 formed on each side surface of the holding portion 1 wherein two side surfaces of each pair are opposite to each other separately, users have a better and easier way of holding the dental floss pick. Meanwhile, the toothpick portion 12 formed at the end of the holding portion 1 is an additional device for cleaning diastemata in order to achieve the effect of preventing dental diseases and cavities.

The above descriptions provide convenient illustrative embodiments as examples for

implementing the present invention in further details and are not intended to limit the scope, applicability or configuration of the present invention in any way.

CLAIMS

What is claimed is:

1. An improved structure of dental floss pick mainly comprising a holding portion and a floss portion which is connected with the front end of the holding portion wherein the floss portion comprises a bridge rod, two prongs, extending from both ends of the bridge rod separately, and a floss piece, connecting between two prongs, wherein the key features thereof include two prongs bending to the same side in an arc shape; a turning portion formed between the holding portion and the bridge rod, making the edge line of the upper part of the holding portion to be aligned with the centerline of the top surface of the bridge rod.

2. The improved structure of dental floss pick as claimed in claim 1, wherein the key features thereof include that the floss piece and the holding portion are in the same surface but not aligned.

3. The improved structure of dental floss pick as claimed in claim 1, wherein the key features thereof include that a slipperiness preventing slope is formed on each side surface of the holding portion wherein two side surfaces of each pair are opposite to each other separately.

4. The improved structure of dental floss pick as claimed in claim 1, wherein the key features thereof include that a toothpick portion is formed at the end of the holding portion and a tilting tip made of soft material is set on the toothpick portion.

5. An improved structure of dental floss pick mainly comprising a holding portion and a floss portion which is connected with the front end of the holding portion wherein the floss portion comprises a bridge rod, two prongs, extending from both ends of the bridge rod

separately, and a floss piece, connecting between two prongs, wherein the key features thereof include two prongs bending to the same side in an arc shape; a turning portion formed between the holding portion and the bridge rod, making the edge line of the upper part of the holding portion to extend to the centerline of the top surface of the bridge rod with an angle.

6. The improved structure of dental floss pick as claimed in claim 5, wherein the key features thereof include that the floss piece and the holding portion are in the same surface but not aligned.

7.The improved structure of dental floss pick as claimed in claim 5, wherein the key features thereof include that a slipperiness preventing slope is formed on each side surface of the holding portion wherein two side surfaces of each pair are opposite to each other separately.

8. The improved structure of dental floss pick as claimed in claim 5, wherein the key features thereof include that a toothpick portion is formed at the end of the holding portion and a tilting tip made of soft material is set on the toothpick portion.

INTERNATIONAL SEARCH REPORT

International application No.
PCT/CN2014/085911

A. CLASSIFICATION OF SUBJECT MATTER

A61C 15/04 (2006.01) i

According to International Patent Classification (IPC) or to both national classification and IPC

B. FIELDS SEARCHED

Minimum documentation searched (classification system followed by classification symbols)

A61C

Documentation searched other than minimum documentation to the extent that such documents are included in the fields searched

Electronic data base consulted during the international search (name of data base and, where practicable, search terms used)

CNKI, CNPAT, WPI, EPODOC: Dental floss, Floss+, tooth+, inclined, arc, bend+, curv+, winding

C. DOCUMENTS CONSIDERED TO BE RELEVANT

Category*	Citation of document, with indication, where appropriate, of the relevant passages	Relevant to claim No.
X	CN 1029492466 A (LIANG, Wanzhi) 06 March 2013 (06.03.2013) description, paragraphs [0011] to [0015], figures 3-6	1-8
A	CN 1146323 A (SHEN, Zhongshan) 02 April 1997 (02.04.1997) the whole document	1-8
A	CN 2130512 Y (RAO, Ruicheng) 28 April 1993 (28.04.1993) the whole document	1-8
A	CN 201422933 Y (LONGCHANG BROTHER CO., LTD.) 17 March 2010 (17.03.2010) the whole document	1-8

☒ Further documents are listed in the continuation of Box C. ☒ See patent family annex.

* Special categories of cited documents:

"A" document defining the general state of the art which is not considered to be of particular relevance

"E" earlier application or patent but published on or after the international filing date

"L" document which may throw doubts on priority claim(s) or which is cited to establish the publication date of another citation or other special reason (as specified)

"O" document referring to an oral disclosure, use, exhibition or other means

"P" document published prior to the international filing date but later than the priority date claimed

"T" later document published after the international filing date or priority date and not in conflict with the application but cited to understand the principle or theory underlying the invention

"X" document of particular relevance; the claimed invention cannot be considered novel or cannot be considered to involve an inventive step when the document is taken alone

"Y" document of particular relevance; the claimed invention cannot be considered to involve an inventive step when the document is combined with one or more other such documents, such combination being obvious to a person skilled in the art

"&" document member of the same patent family

Date of the actual completion of the international search	Date of mailing of the international search report
14 November 2014	26 November 2014
Name and mailing address of the ISA State Intellectual Property Office of the P. R. China No. 6, Xitucheng Road, Jimenqiao Haidian District, Beijing 100088, China Facsimile No. (86-10) 62019451	Authorized officer YIN, Huayu Telephone No. (86-10) 010-61648429

Form PCT/ISA /210 (second sheet) (July 2009)

INTERNATIONAL SEARCH REPORT

International application No.
PCT/CN2014/085911

C (Continuation). DOCUMENTS CONSIDERED TO BE RELEVANT

Category*	Citation of document, with indication, where appropriate, of the relevant passages	Relevant to claim No.
A	US 2011073131 A1 (HSU, WALTER W.) 31 March 2011 (31.03.2011) the whole document	1-8
A	US 5280797 A (FRY STEPHEN) 25 January 1994 (25.01.1994) the whole document	1-8

INTERNATIONAL SEARCH REPORT
Information on patent family members

International application No.
PCT/CN2014/085911

Patent Documents referred in the Report	Publication Date	Patent Family	Publication Date
CN 102949246 A	06 March 2013	JP 3179356 U	25 October 2012
		US 2013048012 A1	28 February 2013
		TW 201309270 A	01 March 2013
		TW 1413512 B	01 November 2013
		DE 202012008171 U1	08 November 2012
CN 1146323 A	02 April 1997	None	
CN 2130512 Y	28 April 1993	None	
CN 201422933 Y	17 March 2010	None	
US 2011073131 A1	31 March 2011	GB 2474061 A	06 April 2011
		GB 2474061 B	21 December 2011
		US 8297290 B2	30 October 2012
US 5280797 A	25 January 1994	None	