April 28, 1970 D. R. McCARTHY ET AL 3,508,717

COATED CONDUCTOR WRAPPING BIT

Filed April 29, 1968

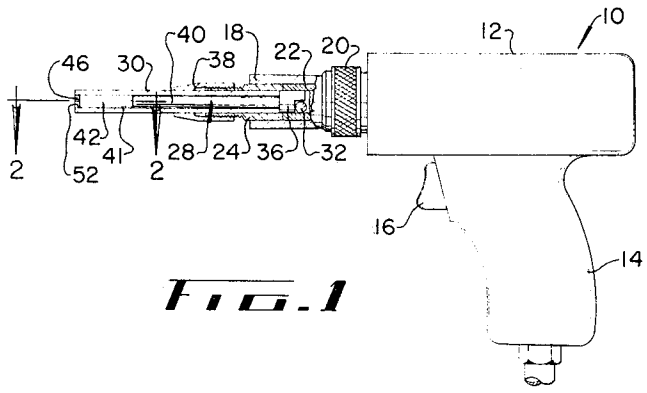

FIG. 1

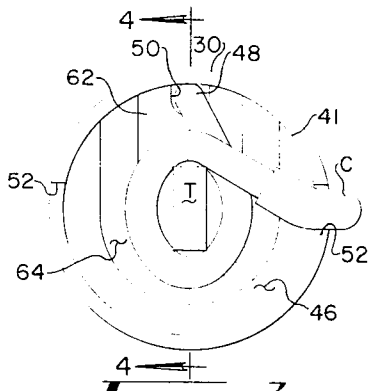

FIG. 3

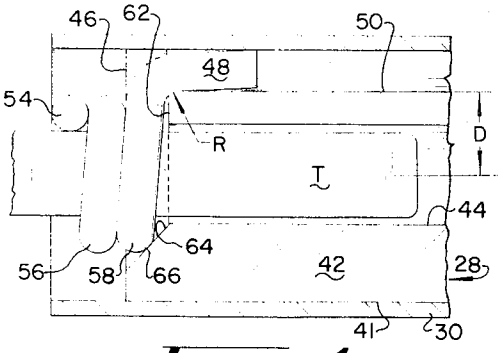

FIG. 4

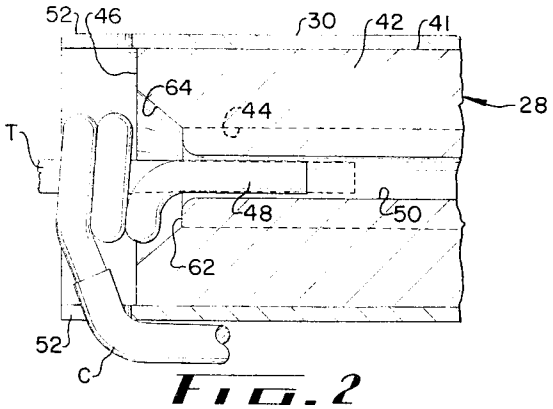

FIG. 2

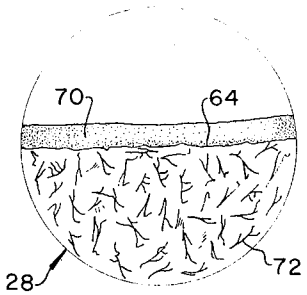

FIG. 5

DAVID R. McCARTHY
EUGENE M. YEDINAK
INVENTORS

BY Joseph W. Holloway
ATTORNEY

United States Patent Office 3,508,717
Patented Apr. 28, 1970

3,508,717

COATED CONDUCTOR WRAPPING BIT

David R. McCarthy, Muskegon, and Eugene M. Yedinak, Grand Haven, Mich., assignors to Gardner-Denver Company, Quincy, Ill., a corporation of Delaware

Filed Apr. 29, 1968, Ser. No. 724,860
Int. Cl. H01b 13/00
U.S. Cl. 242—7.17 8 Claims

ABSTRACT OF THE DISCLOSURE

A bit for making wrapped solderless connections of electrical conductor wire to a terminal post having a coating of vapor deposited titanium carbide on the wire guiding and camming surfaces for improved wrapping characteristics and for longer bit life.

BACKGROUND OF THE INVENTION

In packaging and interconnecting electrical systems a highly desirable technique is one making tool applied terminations consisting of wrapping the end of a conductor wire around a terminal post. The wire wrapping technique is particularly advantageous for making electrical connections in high volume applications such as in the manufacture of radio and television equipment, electronic data processing equipment, and telephone communications systems. Other well recognized advantages of wire wrapped connections include cleanliness, reliability, ease of changing connections, and high density placement of terminals.

The wire wrapping operation is conventionally performed by a power tool driving a rotating bit which guides and wraps the wire around a terminal post in a predetermined number of wraps or convolutions. The wire-contacting end of a wire wrapping bit requires a specially machined and finished surface geometry to adequately guide the wire onto and around the terminal during the wrapping operation.

Examples of conductor wire wrapping bits are disclosed in U.S. Patents 3,078,052 and 3,143,307.

It is critical to the reliable performance of electrical equipment inclusive of the types noted herein that gas tight connections having a predetermined contact area between the conductor wire and the terminal be achieved in the wrapping operation. In order to maintain the integrity of wrapped electrical connection to meet the requirements of tightness and contact area a predetermined tension must be applied to the wire by the wrapping bit during the wrapping operation. U.S. Patent No. 2,759,166 to R. F. Mallina discloses in considerable detail the structure and method of achieving long life wrapped connections. Problems in the assurance of reliable performance of wire wrapping bits have been caused generally by high wear rates on the guiding surfaces of bits and by unscheduled failures such as pitting or spalling of the guide surfaces, both conditions causing an alteration of surface geometry of the bit and consequently resulting in improper wrapping or breakage of the conductor wire. Somewhat related to the above problems is one of providing and maintaining a proper coefficient of friction between the wire sliding over the bit surfaces to assure proper tension on the wire during the wrapping operation and yet prevent over tensioning which in itself can result in stress concentrations in the wire, as it is wrapped, severe enough to cause structural failure of the wire or unwanted twisting of the terminal post.

Another problem in the design of wire wrapping bits is the provision of suitable surface characteristics on the bit not only to maintain the desired coefficient of friction between the sliding wire and the bit surface but to also prevent excessive abrasion of the wire. This latter criteria must be met for the case when coated conductor wire is being wrapped. It is known that certain coatings applied to conductor wire will promote solid state diffusion between the contacting surfaces of wrapped connections for increased mechanical stability and electrical conductivity. Therefore, it is important that excessive abrasion and stripping of the coating from the wire be avoided during the wrapping operation.

Heretofore in the art of designing and manufacturing conductor wrapping bits various surface geometries and bit materials have been tried in combination with a number of surface treatment processes, known in the art, to attempt to optimize bit performance and to improve reliability to the point where the concept of the wrapped electrical connection was economically feasible. Until the discovery of the subject invention, the above noted problems in the art were only partially solved.

SUMMARY OF THE INVENTION

The novelty and inventiveness of the subject invention generally reside in the discovery of a coating and base material combination for wire wrapping bits which provides for the optimum bit surface geometry necessary to perform a desired wrapped connection while also providing suitable friction characteristics required for proper tensioning of the wire as it is wrapped on a terminal post. It is also of importance that the wire-contacting bit surfaces do not abrade or strip coating materials from conductor wires in the wrapping process. Accordingly, the principal object of this invention is to provide greatly improved wrapping performance for wire wrapping bits together with increased bit life and reliability resulting from decreased wear and the reduction of stress fatiguing of the bit guide surfaces.

In accordance with the present invention the above mentioned object is realized in a bit which is provided with conductor guiding and camming surfaces of the desired geometry for forming a wrapped electrical connection with the best mechanical and electrical properties achievable by bit surface design alone. The present invention resides however in the discovery that by depositing a layer of titanium carbide on the conductor guiding and camming surfaces in accordance with generally known methods a conductor wrapping bit is provided with not only greatly improved service life and reliability but with unexpectedly improved conductor wrapping ability where wrapped electrical connections are provided having better mechanical and electrical properties than heretofore achievable.

The titanium carbide coating on the camming and guiding surfaces not only resists abrasion, wear, and prevents early and unscheduled metal fatigue, but provides the optimum surface finish character to prevent abrasion of coated conductors, and frictional characteristics responsible for more tightly wrapped electrical connections without overstressing the conductor wire.

Other objects and advantages as well as a more detailed description of those mentioned will be better understood from the following specification.

BRIEF DESCRIPTION OF THE DRAWING

FIG. 1 is a view partly in section of a tool suitable for driving a typical conductor wire wrapping bit provided in accordance with the present invention.

FIG. 2 is a fragmentary sectional view taken substantially along the line 2—2 of FIG. 1 and illustrating a terminal disposed in the bit in proper relationship for wrapping.

FIG. 3 is an enlarged end view of the bit of FIG. 1.

FIG. 4 is a section taken along the line 4—4 of FIG. 3.

FIG. 5 is a microscopic view of a coating of titanium carbide on a hardened tool steel conductor wrapping bit.

DESCRIPTION OF THE PREFERRED EMBODIMENTS

FIG. 1 illustrates a typical rotary tool used for hand applied wrapped connections and is merely an example of one apparatus used for driving conductor wire wrapping bits. Bits of the general type disclosed are also used in automatic wire wrapping machines and manually rotated tools.

The illustrative tool, generally designated by the numeral **10**, includes a housing **12** for a conventional rotary power source such as an electric or pressure fluid motor, an integrally formed handle **14**, and a control trigger **16**. A guide sleeve **18** is detachably secured to a forward projecting portion of the housing **12** by a nut **20**.

A rotatable bit driving member **22** is coaxially journaled within guide sleeve **18** and engages a mating rotatable element (not shown) which is drivably connected to the rotary motor disposed in housing **12**. A collet **24** extends into the forward end of guide sleeve **18** and is secured against relative rotational and axial movement. A conductor wrapping bit **28** is insertable into a tubular bit sleeve **30** in a forwardly direction. In properly assembled relation with collet **24** and bit driving member **22**, as shown in FIG. 1, the bit **28** is held against relative rotation with respect to the bit driving member **22** by interlocking engagement of a pin **32**, transversely carried by member **22**, and a notch in an enlarged, integral shank portion **36** of bit **28**. The bit sleeve **30** is held against relative rotational movement with respect to collet **24** by a collet nut **38** which compressively engages the bit sleeve **30** at its forward end and threadedly engages the forwardly extending portion of collet **24**. While abutment of the extreme inner end of bit sleeve **30** and the front face of shank **36** of the bit prevents axial displacement of the bit **28** with respect to sleeve **30**, the shaft **40** and the integral head **42** of the bit **28** are freely rotatable within the surrounding sleeve **30** in response to actuation of the motor. The diameter **41** is journaled by the sleeve **30** serving as a bearing therefor.

As shown in FIG. 2, a bore **44** extends axially into the forward end of bit **28**. The bore **44** has a diameter and length sufficiently great to freely receive an electrical terminal T about which conductor C is to be wound. For purposes of illustration, the terminal T is shown as a generally rectangular metallic post; however, in practice, the configuration and dimensions of the terminal will vary to suit particular wiring applications. The terminal may be fixed to a terminal board (not shown) which carries closely spaced terminals.

To position the stripped portion **48** of conductor C for application to the terminal T in contiguous helical convolutions upon rotation of bit **28**, the bit is provided with a conductor wire receiving groove **50** which is closed by the overlying bit sleeve **30**. The groove is longitudinally relieved in the peripheral surface of the bit to open axially to the end face **46** of bit **28** and is disposed in radially offset relation to the terminal receiving bore or recess **44**. In operation the stripped end **48** of conductor C is withdrawn from groove **50** as it is wound about terminal T. In the illustrated embodiment, a portion of bit sleeve **30** which longitudinally projects beyond bit head **42** of the bit **28** is provided with a pair of radially opposed slots **52**, **52**. A selected one of these slots receives a portion of conductor C which is first positioned in the slot and is preferably bent rearwardly along bit sleeve **30**.

In FIGS. 3 and 4 conductor C is shown in the process of being wrapped around terminal T. The surface geometry of the wrapping bit **28** must conform to special design requirements to assure proper tensioning of the conductor C for the several reasons discussed herein and well known in the art, and as shown in FIG. 4 to assure

that the successive convolutions **54**, **56** and **58** are laid neatly adjacent to each other in helical fashion about the terminal T.

For example, the proper tensioning of the conductor C is a function of the radial distance D of the conductor receiving groove **50** from the terminal T and the conductor guide radius R blending the groove **50** into the inner end face **62**. As can be readily appreciated if the conductor guide radius R was very sharp for a given conductor cross sectional diameter the conductor would be very highly stressed and likely would break in the bending process as it was withdrawn from the groove **50**. On the other hand, a gradual sloping surface (large radius) from the groove **50** to the surface **62** results in poor control over the proper laying of each convolution adjacent to the preceding one. Another important factor to be considered in controlling the tension in the conductor during the wrapping process is the coefficient of friction between the bit surfaces and the conductor. The various effects of the friction coefficient will be apparent from further discussion. Of primary importance in the design of the bit **28** is the geometry of the generally U-shaped surface **64** which slopes at a predetermined angle from the outer end surface **46** to the terminal bore **44** and the inner end surface **62**. As can be seen in FIGS. 3 and 4, the surface **64** continually cams the conductor C radially inward and axially outward with respect to the bit **28** to facilitate the proper and desired wrapping operation. As can be seen in FIG. 4, the desired camming action of the surface **64** on the conductor C takes place on a very small contact area at **66** which in theory is point contact but due to elastic deflection of the coacting surfaces of the conductor and the bit does become a finite though small area. This small contact area moves in a clockwise direction around the bottom portion of the U-shaped surface **64** as the bit **28** rotates counterclockwise (viewing FIG. 3) in the wrapping process. A more complete description of the action of the surface **64** in camming the conductor is given in U.S. Patent 3,078,052 to W. L. Olds et al. The important consideration here, and the illustrative bit **28** is used merely as an example, is that conductor wrapping bits known in the art by the nature of the required design of the camming surfaces and the wire guide radius are subject to very high contact stresses due to the sliding action of the conductor under forces normal to the contact surface on very small contact areas. Generally speaking, the guiding and camming surfaces are accordingly subject to high wear rates which eventually cause an undesirable change in surface geometry sufficient to require repair work or a termination in the useful life of the bit.

Another distinct problem arises in achieving reliable and predictable bit performance where pitting or spalling occurs on the guiding and camming surfaces such as the radius R and the camming surface **64** due to a phenomenon known as contact stress fatigue. This pitting or spalling is, of course, intolerable since the crater formed in the guiding and camming surfaces will cause a faulty wrap or severely abrade or break the conductor wire.

Contact stresses in conductor wrapping bits are particularly high due to the fact that forces which are exerted normal to the contact surfaces such as the camming surface **64** and the guide radius R are accompanied by frictional forces tangential to the surface. As the conductor slides over the camming and guiding surface the frictional force resulting from the sliding contact combines with the normal force to create a maximum shearing stress which moves from a point somewhat below the surface of the bit material to the contact surface for a coefficient of friction of .10 or greater. From what is known in the art of mechanics of materials, it is believed contact stress fatigue failures originate at inclusions in the metal, or discontinuities or asperities in the surface, and it is an important advantage of the instant invention to provide a coated conductor wrapping bit having a coefficient of

friction with the conductor wire which causes the maximum contact shear stress to occur at the contact surface. Other factors affecting contact stresses are variations in tool operator handling behavior and irregularities in conductor geometry. Both of these factors are generally beyond the control of the bit designer, however, and must be compensated for with a built in factor of safety in design.

Contact stress fatigue failures of bits made of heretofore known materials and coating combinations have been so unpredictable that critical applications of bits such as in the assembly of telephone communications equipment, and defense electronics equipment require performance qualification tests every three thousand wrapping operations or about every eight hours of normal use. Conductor wrapping bits in accordance with the invention have improved reliability and reduced wear rates to the extent that qualification tests need be performed as infrequently as every forty to fifty thousand wrapping operations even in the critical applications mentioned.

Consistent with the performance requirements of conductor wrapping bits the most suitable materials, considering feasible fabrication techniques, have been the medium alloy water hardening, oil hardening, and air hardening tool steels known by the American Iron and Steel Institute (AISI) symbols W1, O1, and A2, respectively. Standard alloy constructional grades C1117L and 52100 steel have also to a lesser degree been used with satisfactory results but are generally not manufactured to tool steel quality. These steels are all characterized by high hardness and resistance to wear and abrasion.

Prior to the present invention, the most suitable wrapping bits were manufactured of the above types of steel heat treated to give maximum hardness on the camming and guiding surfaces, and polished to a surface finish of 8 to 16 microinches (root-mean-square). This finish does not result in the desired relatively high coefficient of friction between the conductor and the bit surface commensurate with proper tensioning of the conductor in the wrapping process, but has been found to be necessary for nonabrasion of the conductor. The latter requirement is to prevent the removal of coatings such as aluminum, tin, zinc, and cadmium alloys from copper conductor wire. These alloys promote solid state diffusion of the metallic elements of a wrapped interconnection as disclosed in U.S. Patent No. 2,870,241 to W. P. Mason. Conductor coatings must also be kept intact to prevent their accumulation on the bit surfaces and therefore cause a resultant change in bit surface geometry.

To summarize the dilemma in providing optimum conductor wrapping bit performance and reliability, it may be understood from the above discussion that bit surface geometry for optimum wrapping performance requires that hardened steel alloys be used for reasonable service life, and for nonabrasion of the conductor wire surface finishes must be provided which yield frictional characteristics which tend to lower the abiilty of the bit to perform adequate wrapped electrical connections. Therefore, the required surface geometry, hardness and finish combine to work against the requirements of reliability and desired friction properties when using heretofore known material.

The standard qualification test for wrapped electrical connections is known as the strip force test and is performed by measuring an axially applied force required to strip the wrapped connection bodily from the terminal lengthwise thereof. A minimum strip force value based on the average of five wrapped connections is specified to assure the mechanical and electrical integrity of the connection and a maximum strip force value to prevent overstressing the conductor and the concomitant structural failure of the same when unwrapped or subjected to vibration.

Prior to the discovery of the instant invention, the aforementioned critical applications of wrapped electrical connections could withstand a tolerance range between the minimum and maximum strip force values of approximately a maximum range of only 20 percent of the minimum value. For example, a connection involving a terminal of rectangular cross section dimensions of .009 x .060 inch wrapped with 7 turns of 24 gauge (.020 in. dia.) tin coated solid copper conductor must qualify for a stripping force of 5,700 grams minimum to 6,800 grams maximum when applied with heretofore known bits. Factors affecting the range of strip force values include, of course, changes in the coefficient of friction between the conductor and the bit surfaces caused by conductor surface and coating variations, manufacturing errors in bit surface geometry, and tool operator handling characteristics. All of these factors are beyond the control of the bit designer and have heretofore limited the acceptable range of strip force values.

Accordingly, the instant invention contemplates a conductor wrapping bit of greatly improved performance in overall service life, reliability, and in providing wrapped electrical connections having higher strip force values than previously allowed without conductor breakage during unwrapping or when subject to vibration tests.

The improved conductor wrapping bit is realized with a base material comprising a hardenable carbon or alloy steel finish machined and polished to produce the aforementioned surface geometry and character, respectively, commensurate with requirements for optimum wrapping and nonabrasion of the conductor. The improved bit is coated with a microscopic layer of material known as titanium carbide in accordance with known methods and procedures for application to metals.

Depending on the particular steel base material used, the improved bit is further heat treated to produce high base material hardness under the very hard and abrasion resistant titanium carbide coating. No further processing is generally required to prepare the bit for use.

The advantages of titanium carbide coated conductor wrapping bits are many and furthermore have produced unexpected results in improving the performance of these particularly critical tools as illustrated by the following example:

Conductor wrapping bits made of a base material of 1.0 percent carbon, 5.0 percent chromium, and 1.0 percent molybdenum tool steel (AISI classification A2), polished on the camming and guiding surfaces to 8 to 16 microinches (root-mean-square), coated by vapor depositing a layer of titanium carbide approximately .0003 inch thick on the conductor camming and guiding surfaces, and air hardened to 50–60 Rockwell C scale hardness (base material) were tested.

(1) All bits maintained qualifying strip force values far in excess of 400,000 wrapping operations with no evidence of wear. This is approximately four times the expected life of previous known conductor wrapping bits and twenty times the rework and repolish interval of previous known bits.

(2) A virtual elimination of contact stress fatigue failures has been experienced primarily, it is believed, due to the elimination or filling of discontinuities in the base material surface, and providing a coefficient of friction between the conductor and the bit surface sufficiently great enough to result in the combination of forces normal to the bit surfaces and frictional forces tangential to the bit surfaces that would place the maximum shear stress in the contact surface in accordance with the previously mentioned and known characteristics of contact stresses. Due to the fact that the maximum shearing stress does occur at the surface, the titanium carbide coating rather than the base material is subjected to this stress. Subjecting the titanium carbide coating to the maximum contact shear stress is an important aspect of the invention based on the fact that carbides of the tungsten, titanium and tantalum group exhibit substantial shear strength.

(3) The tolerance range of qualifying strip force values has been increased for 24 gauge tin coated solid copper conductor of 7 turns of wrap on a .009 inch x .060 inch rectangular cross section terminal from 1,100 grams to 2,300 grams. In other words, a qualified connection of the type noted above would have a minimum acceptable strip force of 5,700 grams and a maximum acceptable strip force of 7,500 to 8,000 grams without experiencing a structural failure of the conductor when unwrapped from the terminal. This improvement in the maximum strip force value without conductor breakage is believed to be due to the more uniform stressing of the conductor in the wrapping process caused by the coefficient of friction and the as deposited surface character of the titanium carbide coating. In fact, conductor wrapping bits with titanium carbide coatings consistently yield higher strip force values without further concern for the lower limit of the range of acceptable values. Experimentation has indicated that further polishing of the bit camming and guiding surfaces after deposition of the titanium carbide coating has been detrimental to the strip force values achievable, thereby reinforcing the belief that a unique surface finish character is provided by the titanium carbide. Also, the aforementioned factors of conductor surface and coating variations, bit manufacturing errors, and operator characteristics have been compensated for and are no longer as critical to limiting maximum strip force values as in previous known bits.

In one preferred method of manufacture of the improved wrapping bit the AISI A2 steel is used as the base material primarily because of simultaneity in the heat treating and titanium carbide coating process. Various hardenable steels are however usable but are somewhat less preferable because additional heat treating operations are required to achieve maximum hardness.

Referring to the drawing and the bit **28** as an example in a preferred manufacturing process a blank is rough turned to form the notched integral shank portion **36** and the diameter **41**. In forming the conductor guide radius R a small amount of metal is removed in the vicinity of the radius by a drill spot or end mill followed by a coining operation to form the radius R. The coining operation is preferred for establishing dimensional control and surface finish on the radius. Subsequent steps involve machining and finish grinding of the terminal bore **44**, the conductor slot **50** and the camming surface **64**. Finishing operations on conductor bits are critical and due to the small dimensions of the camming and guiding surfaces, parts are usually hand polished under a microscope to achieve the required surface finish on the radius R and the surface **64** (8 to 16 microinches).

The titanium carbide coating process is carried out by methods generally known and disclosed in U.S. Patent 2,962,388. Basically, the process comprises degasifying the finished bit in a dry hydrogen or vacuum furnace atmosphere for two hours at 1,650 to 1,850° F. followed by a vapor deposition coating process in an atmosphere of gaseous titanium tetrachloride, dry hydrogen, and methane. A preferred coating temperature to establish the desired surface character is 1,840° F. for a duration of approximately 2 to 2.5 hours for parts of the material and surface finish noted above.

The furnace apparatus usually consists of a sealable retort or reaction chamber on which the pieces to be coated are suitably placed on racks or fixtures, and a furnace chamber in which the retort is placed for heating. The reaction substances are introduced into the retort through suitable conduits and control apparatus. After the coating process is complete, the retort is withdrawn from the furnace and allowed to cool in atmospheric conditions to 1,400° F. whereupon a controlled cooling rate is established to achieve a hardness of 50–60 Rockwell C on the A2 steel.

In FIG. 5 a microscopic view approximately six hundred times actual size of a portion of the camming surface **64** of the bit **28** is shown with a coating of titanium carbide **70** deposited on a base material **72** of AISI A2 tool steel. The relative evenness and the filling of the surface discontinuities of the base material **72** by the coating **70** may be seen from the reproduction of a photomicrograph.

Due to the small dimensions of conductor wrapping bits, usually less than .25 inch outside diameter by 3 to 6 inches in length, oil hardening steels such as AISI grade O1 are sometimes preferred for the base material because the unavoidable heat distortion encountered by these small pieces in the coating process may be corrected by localized heating and straightening operations after the coating process and heat treating is completed. With the use of the O1 oil hardening steel the heat treating process includes cooling to atmospheric temperature after coating then reheating to 1,450° F. and quenching in oil at atmospheric temperature. The process is efficiently carried out with the retort and furnace apparatus mentioned above but with the retort modified to have a removable bottom section to permit dropping the rack of bits into the oil bath. Of course, in the processes of coating described herein the coating is uniformly dispersed over the entire bit and therefore aids in wear resistance of the bearing diameter **41**, and the shank **36**.

The foregoing statement is a summary of the engineering considerations which enter into the determination of conductor wrapping bit performance. Heretofore efforts to design a reliable long life bit could only be achieved to a limited degree with the best known materials. Furthermore a number of processes and treatment techniques to improve the wear characteristics and eliminate fatiguing of bits made of high quality tool steel were only partially successful. Since most of the techniques resulted in a harder surface, frictional characteristics of the bits became generally poorer resulting in lower coefficients of friction and consequently weak wrapping tension. However, with the application of a titanium carbide coating in accordance with this disclosure not only were solutions to wear and metal fatigue obtained but a wholly unexpected improvement in the wrapping ability of known bit designs was made. The invention contemplates that not only the bit illustrated in the drawing and described in detail may benefit from the improvements made, but that bits known in the art and future developments in conductor wrapping bits will benefit from the present invention.

What is claimed is:

1. In a device for wrapping a conductor around a terminal:

a rotatable bit defining terminal receiving means and conductor receiving means opening to one end of said bit;

surface means on said one end of said bit for guiding and camming said conductor onto said terminal, and the improvement comprising:

a coating of titanium carbide on said bit.

2. The invention according to claim **1** wherein:

said surface means comprises a conductor guide radius adjacent to said conductor receiving means having a titanium carbide coating thereon.

3. The invention according to claim **1** wherein:

said surface means comprises conductor camming means having a titanium carbide coating thereon.

4. The invention according to claim **1** wherein:

said bit is made of a base material comprising a hardenable steel.

5. The invention according to claim **4** wherein:

said base material of said bit is hardened to at least a surface hardness of 50 to 65 Rockwell C.

6. The invention according to claim 4 wherein:
said surface means has a finish of 8 to 16 microinches.
7. The invention according to claim 6 wherein:
said finish on said surface means is on said base material.
8. The invention according to claim 4 wherein:
said titanium carbide coating on said surface means has a surface finish produced by a vapor deposition process carried out at a tempearture of 1,840° F.

References Cited

UNITED STATES PATENTS

3,078,052	2/1963	Olds et al.	242—7.17
3,143,307	8/1964	Baker	242—7.17
3,213,894	10/1965	Etchison et al.	242—7.17 XR

BILLY S. TAYLOR, Primary Examiner