June 29, 1954 R. E. GINN 2,682,217

MARKING DEVICE WITH PROJECTABLE DIE MEANS

Filed March 12, 1948 2 Sheets-Sheet 1

Fig. 1.

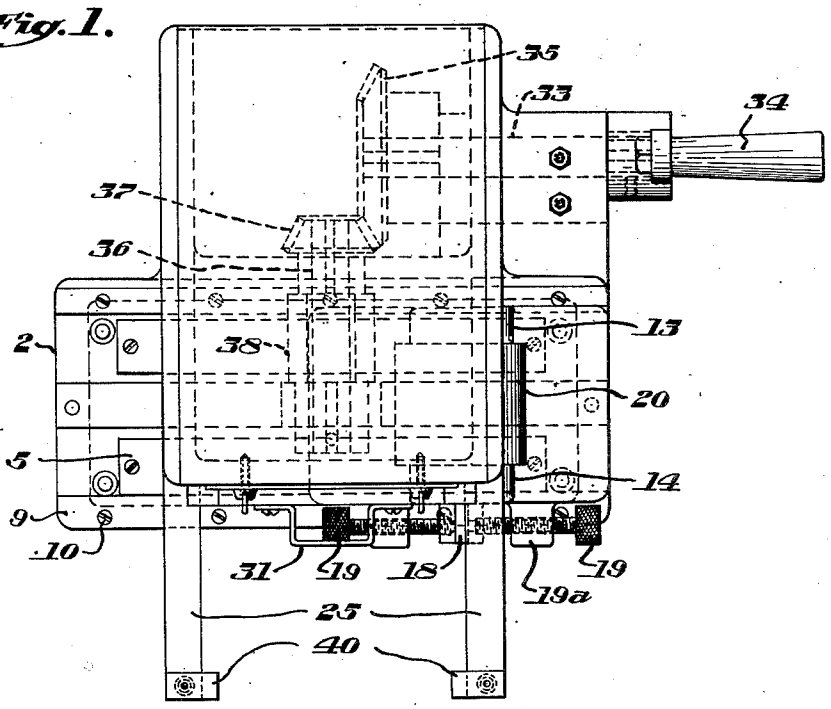

Fig. 2.

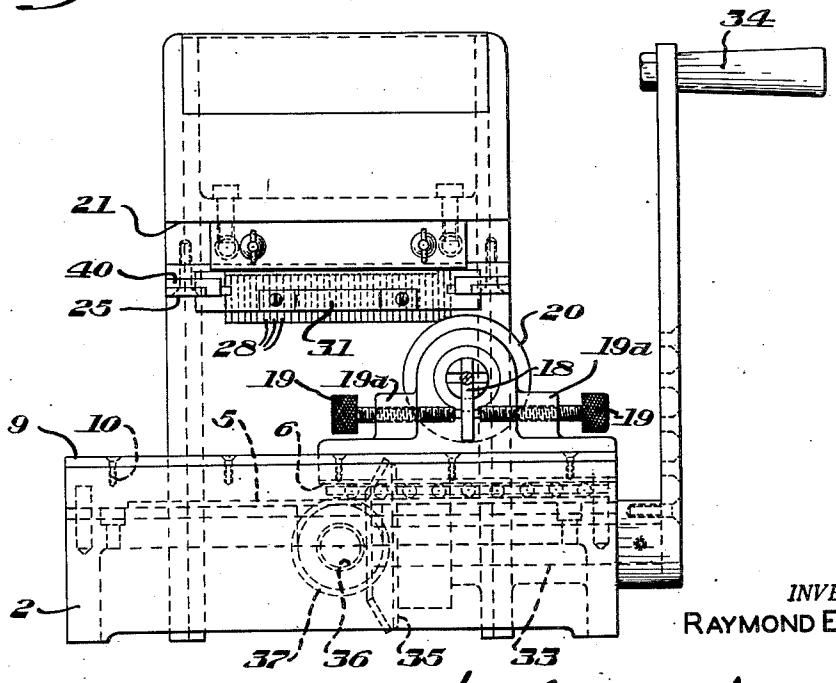

INVENTOR.
RAYMOND E. GINN

by Stebbins, Blum & Webb
his attorneys

June 29, 1954 R. E. GINN 2,682,217

MARKING DEVICE WITH PROJECTABLE DIE MEANS

Filed March 12, 1948 2 Sheets-Sheet 2

Fig. 3.

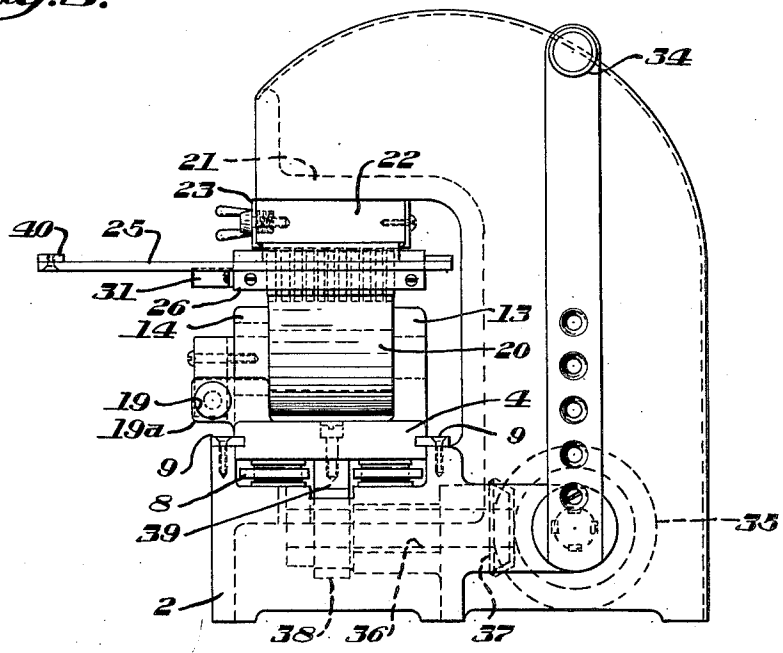

Fig. 4.

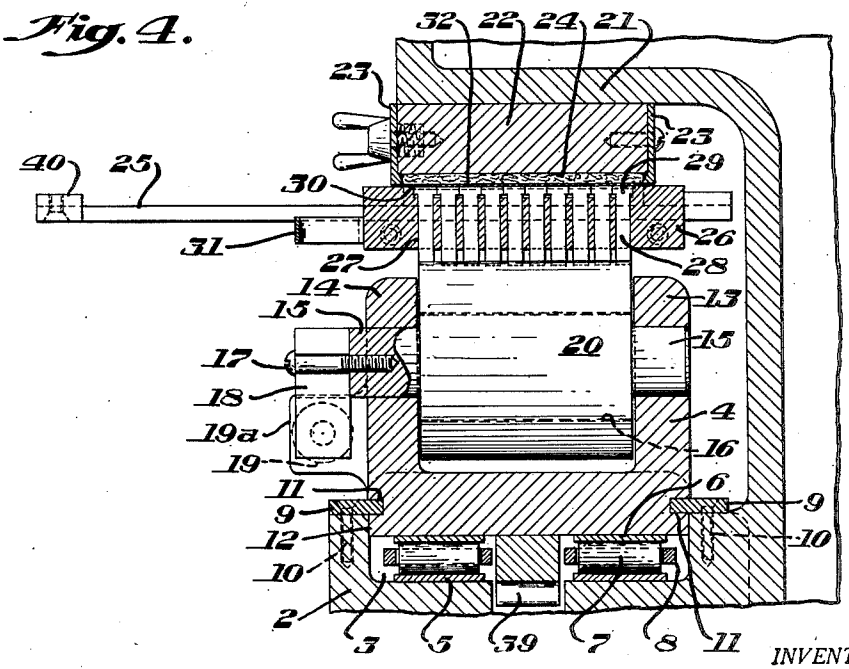

INVENTOR.
RAYMOND E. GINN

by Stebbins, Blenko & Webb
his attorneys

Patented June 29, 1954

2,682,217

UNITED STATES PATENT OFFICE

2,682,217

MARKING DEVICE WITH PROJECTABLE DIE MEANS

Raymond E. Ginn, Pittsburgh, Pa., assignor to Jas. H. Matthews & Co., Pittsburgh, Pa., a corporation of Pennsylvania

Application March 12, 1948, Serial No. 14,520

5 Claims. (Cl. 101—3)

1

This invention relates to marking devices, especially devices for applying markings to work by stamping, embossing or the like. It relates to marking devices employing die means and improved means for operating the dye means to mark work.

My marking device has wide application, being adapted for the marking of work by means of dies or types. It is especially well adapted for the marking of hard material such as metal and especially relatively thin plates of such material. For purposes of explanation and illustration I shall describe the invention as embodied in a device for marking metal plates such as name plates for use on machinery and other products sold in trade.

My marking device comprises die means, means for disposing work with a surface thereof in operative relation to the die means and means engaging the die means at a portion thereof remote from said surface and movable relatively to the die means generally parallel to said surface for forcing the die means into the work at said surface thereof. The die means are preferably mounted in a holder with respect to which they are movable. I prefer to employ a plurality of separate dies mounted in generally side-by-side relation and to move the dies sequentially relatively to the work to mark the work. I desirably move the dies toward the work by means acting to cam the dies, a roller effectively serving this purpose. Means are provided for relatively moving the roller and the dies so that as the roller advances it rolls over the dies and forces the dies sequentially into the work.

I preferably provide backing means against which a portion of the work remote from the dies is adapted to lie when the dies act on the work. When the machine is adapted for embossing work the backing means is made of relatively deformable material while for stamping the backing means is made of relatively undeformable material.

The holder preferably serves as a holder both for the dies and for the work and has a work receiving portion for receiving work and disposing it in operative relation to the dies. The work is disposed against the backing means when the dies are operated to mark the work. Desirably the holder is mounted for movement between a position in which the work receiving portion is accessible for receiving and removing work and a position in which work received by the holder lies against the backing means. Thus when a plate is to be embossed the holder is drawn out to accessible position, the plate is placed on the

2

holder and the holder is moved to operative position with the plate lying against the backing means. When the holder is in that position the dies are in the path of the die operating means which, as above indicated, is preferably a roller carried by a carriage which moves transversely of the direction of movement of the dies relatively to the holder.

The holder and the carriage may be operated by hand or mechanically. Since the holder is relatively small, light and easy to manipulate, it is desirably mounted on a slide and adapted to be moved along the slide manually. The carriage requires somewhat more force to operate since during its operation the means acting on the dies engages the dies and forces them into the work against the resistance offered by the work. The carriage may be operated by a hand crank through gearing which desirably includes a rack and pinion or may be operated mechanically as, for example, by a fluid pressure operated piston.

When a plate is being stamped the dies simply make an impression in one surface of the plate while when a plate is being embossed the dies deform the material of the plate at both faces, the material of the plate being forced into the relatively deformable backing means which is used when an embossing operation is being performed.

Ordinarily the dies are in the form of types but die means of various kinds may be employed.

Other details, objects and advantages of the invention will become apparent as the following description of a present preferred embodiment thereof proceeds.

In the accompanying drawings I have shown a present preferred embodiment of the invention in which

Figure 1 is a top plan view of a marking device;

Figure 2 is a front elevational view of the marking device shown in Figure 1;

Figure 3 is an elevational view of the marking device shown in Figures 1 and 2 as viewed from the right in those figures; and

Figure 4 is a fragmentary vertical cross sectional view to enlarged scale through the marking device.

The marking device comprises a base 2 having a guideway 3 in which a carriage 4 is disposed for guided reciprocation. Hardened steel plates 5 are laid in the guideway 3 and fastened to the base. Opposed hardened steel plates 6 are fastened to the bottom of the carriage 4. Hardened steel rollers 7 mounted in cages 8 operate between the plates 5 and 6, forming an antifriction support for the carriage 4 whereby the car-

riage may easily move along the guideway yet will be supported from below so as to resist the reactive thrust to which it is subjected when the dies presently to be described are operated. Plates 9 extending longitudinally of the guideway 3 are bolted to the base 2 by bolts 10 and enter guide slots 11 in the carriage 4. The carriage 4 is also guided between the opposed vertical walls 12 of the guideway. The guides 9 also maintain the carriage in place, preventing displacement thereof in the upward direction.

The carriage 4 has opposed upward extensions 13 and 14 in which are journaled coaxial trunnions 15 carried at the opposite ends of an eccentric 16. Connected with the left hand trunnion 15, viewing Figure 4, by a bolt 17 is a downward extension 18 which lies between the ends of two opposed adjusting screws 19 threaded through bosses 19a in the carriage. When the two screws 19 are turned in one direction the extension 18 is moved laterally and since it is connected with the trunnion 15 this results in turning of the eccentric 16. Turning of the eccentric 16 effects vertical adjustment of the die operating mechanism. The element which engages the dies to operate them upon movement of the carriage along the guideway is a roller 20 journaled upon the eccentric 16. During operation of the marking device the eccentric 16 is maintained stationary by the screws 19 while the roller 20 turns upon the eccentric.

The base 2 has a portion 21 disposed above a portion of the guideway 3. Connected with the portion 21 is a block of steel 22 to whose opposite vertical faces are connected retainers 23 which hold to the bottom of the block 22 a backing plate which when the marking device is used for embossing is of relatively deformable material such as fiber but which when the marking device is used for stamping is of relatively undeformable material such as hardened steel. Since the marking device as shown in the drawings is set up for embossing, the backing plate which is indicated at 24 is shown as being of fiber. It may easily be removed and replaced by a hardened steel backing plate if the marking device is to be used for stamping.

Mounted in the base 2 is a transverse guideway or slide 25 on which is guidedly mounted a holder 26. The holder 26 is both a die holder and a work holder. It has a plurality of die openings 27 therethrough for receiving the shanks of dies 28 which may be in the form of types. Each of the openings 27 is enlarged at its upper end to receive a head 29 of the corresponding type, the types being of T-form as shown in Figure 4. Normally the bottoms of the heads of the types rest on the upper surface of the holder 26. However the types are movable relatively to the holder and may be forced upwardly as will presently be described.

The holder also has a work receiving portion 30 in the form of a shallow indentation in the upper face of the holder into which plates to be embossed may successively be positioned. When a plate is positioned in the holder it is disposed in operative relation to the dies 28. The holder 26 has a handle 31 which may be grasped by the operator's fingers to pull the holder toward the left viewing Figure 4 to accessible position for removing an embossed plate and positioning on the holder an unembossed plate or blank to be embossed. The holder may then be moved toward the right on the slide 25 to the position longitudinally of the slide shown in Figure 4 in which the work or plate designated by reference numeral 32 lies against the backing plate 24.

The dies or types 28 are ranged in side-by-side relation both longitudinally of the guideway 3 and transversely of that guideway so that a marking which may for example consist of several lines of characters may be applied to a plate.

Mounted in the base 2 is a shaft 33 to which is connected at one end a hand crank 34. At its opposite end the shaft 33 carries a bevel gear 35. Also mounted in the base 2 is a shaft 36 one end of which carries a bevel pinion 37 meshing with the bevel gear 35. The shaft 36 also carries a spur pinion 38 which meshes with a rack 39 carried by the carriage 4 at its bottom as shown in Figure 4 and extending down between the opposed sets of rollers 7.

The operation of the marking device will now be described. The carriage 4 is initially in an extreme position at one end or the other of the guideway 3. It is not shown in such an extreme position in the drawings. When in extreme position the roller 20 will be offset longitudinally of the guideway 3 from the dies 28. With the roller thus in inoperative position with respect to the dies the holder 26 is free to be pulled out toward the left, viewing Figure 4, by the operator. When the holder is pulled out toward the left its movement is limited by stops 40 on the opposed elements of the slide 25. A plate to be embossed is positioned upon the holder in the work receiving portion 30 thereof. When the plate is so positioned the dies 28 are in their lowermost position just out of contact with the lower surface of the plate. When in that position the heads of the T-shaped dies rest on the upper surface of the holder 26. The holder 26 is then pushed in to the position shown in Figure 4 when the plate 32 to be embossed lies against the backing plate 24. The hand crank 34 is then operated to turn the shaft 33. That shaft through the bevel gear 35 and the bevel pinion 37 turns the shaft 36 carrying the spur pinion 38 which meshes with the rack 39 on the bottom of the carriage 4 so that the carriage is moved longitudinally of the guideway 3. The roller is adjusted so that its top is above the bottoms of the dies when the dies are in their lowermost positions. The roller engages the bottoms of the dies and as the roller advances sequentially forces the dies upwardly to emboss the plate 32. The dies are forced into the metal of the plate 32 and a portion of that metal is forced into the fiber backing plate 24, thus embossing the plate 32. The dies are operated sequentially by the roller as the carriage 4 advances along the guideway 3. In Figure 2 the roller is shown as partially operating the first two rows of dies. In Figure 4 the dies in the foreground are in intermediate positions, having been raised slightly by the roller but still not quite having reached their uppermost positions.

Since only a few of the dies are operated at one time the power requred to operate the marking device is much less than if all of the dies were operated at once. Moreover with a given power input a more effective marking is obtained since the power is sequentially concentrated at successive rows of dies, i. e., all of the available power is at each instant during operation of the device brought to bear on a relatively limited number of dies.

The carriage 4 may be stopped when it has been advanced to the opposite end of its travel in the guideway 3, at which time the holder 26 may

be drawn out, the embossed plate removed and a fresh blank inserted. The holder is then pushed in to the position shown in Figure 4 and the hand crank 34 is operated to move the carriage 4 in the direction opposite the direction of its initial movement to emboss the blank. Thus one blank may be embossed upon movement of the carriage in each direction, or two blanks per cycle.

The above description applies also when the device is used for stamping except that for stamping the backing plate 24 of fiber is replaced by a similar backing plate of hardened steel. Also some vertical adjustment of the roller 28 may be necessary, this being effected as above described by the adjusting screws 19.

While I have shown and described a present preferred embodiment of the invention it is to be distinctly understood that the invention is not limited thereto but may be otherwise variously embodied within the scope of the following claims.

I claim:

1. A marking device comprising a base, a holder, die means mounted in the holder and movable relatively thereto, the holder having a work receiving portion for receiving work and disposing the same in operative relation to the die means, backing means carried by the base against which a portion of the work remote from the die means is adapted to lie when the die means act on the work, the holder being movably mounted with respect to the base for movement between a position in which the work receiving portion is accessible for receiving and removing work and a position in which work received by the holder lies against the backing means and means engaging the die means at a portion thereof remote from the work and movable relatively to the die means when the holder is stationarily positioned in the second mentioned position for forcing the die means toward the work and toward the backing means to mark the work.

2. A marking device comprising a base, a holder, die means mounted in the holder and movable relatively thereto, the holder having a work receiving portion for receiving work and disposing the same in operative relation to the die means, backing means carried by the base against which a portion of the work remote from the die means is adapted to lie when the die means act on the work, the holder being movably mounted with respect to the base for movement between a position in which the work receiving portion is accessible for receiving and removing work and a position in which work received by the holder lies against the backing means, a carriage movable relatively to the die means transversely of the direction of movement of the die means relatively to the holder and means on the carriage acting on the die means as the carriage advances when the holder is stationarily positioned in the second mentioned position for forcing the die means toward the backing means to mark the work.

3. A marking device comprising a base, a holder, a plurality of separate dies mounted in generally side-by-side relation in the holder and movable relatively to the holder, the holder having a work receiving portion for receiving work and disposing the same in operative relation to the dies, backing means carried by the base against which a portion of the work remote from the dies is adapted to lie when the dies act on the work, the holder being movably mounted with respect to the base for movement between a position in which the work receiving portion is accessible for receiving and removing work and a position in which work received by the holder lies against the backing means, a carriage movable relatively to the dies transversely of the direction of movement of the dies relatively to the holder and a roller on the carriage acting on the dies as the carriage advances when the holder is in the second mentioned position for forcing the dies sequentially toward the backing means to mark the work.

4. A marking device comprising work holding means adapted to hold work in position to be marked, die holding means fixedly attached to the work holding means so as to form in effect a work and die holding unit, a plurality of separate dies in the die holding means, the dies being mounted in the die holding means for movement toward the work holding means, means movable relatively to the die holding means and the dies in thrust relation to the dies engaging the dies seriatim to move the dies individually toward the work holding means to mark work held by the work holding means in position to be marked and means guidingly supporting the work and die holding unit for movement between an operative position relatively to the last mentioned means and an inoperative position remote from the last mentioned means in which last mentioned position work may be applied to and removed from the work holding means.

5. A marking device comprising a housing, work holding means adapted to hold work in position to be marked, die holding means connected with the work holding means so as to form in effect a work and die holding unit, means guidingly supporting said unit in the housing for advancement to operative position in which work held thereby is adapted to be marked and for withdrawal to inoperative position to permit work to be removed from and applied to the work holding means, a plurality of separate dies in the die holding means, means supporting the dies in the die holding means for movement toward the work holding means and permitting return movement of the dies away from the work holding means, a carriage movable behind the dies and a roller carried by the carriage engaging the dies seriatim upon movement of the carriage to move the dies individually toward the work holding means to mark work held by the work holding means in position to be marked.

References Cited in the file of this patent

UNITED STATES PATENTS

Number	Name	Date
279,078	Bushorr	June 5, 1883
469,931	Briggs	Mar. 1, 1892
1,063,084	Thomson	May 27, 1913
1,066,653	Rau	July 8, 1913
1,125,499	Duncan	Jan. 19, 1915
1,144,340	Campbell	June 22, 1915
1,196,729	Barroll	Aug. 29, 1916
1,442,059	Engstrom	Jan. 16, 1923
1,497,872	Pollock	June 17, 1924
1,554,235	Seagers	Sept. 22, 1925
1,619,959	Sasseman	Mar. 8, 1927
1,801,596	Dugdale	Apr. 21, 1931
2,092,026	Schaefer	Sept. 7, 1937
2,098,164	Riggenbach	Nov. 2, 1937
2,344,609	Hanson	Mar. 21, 1944
2,398,036	Paris	Apr. 9, 1946