United States Patent Office

Des. 232,425

Patented Aug. 20, 1974

232,425

WORKBOAT

John E. Marriner, 4019 Pine Ave.,
Long Beach, Calif. 90807

Filed Sept. 28, 1972, Ser. No. 292,952

Term of patent 14 years

Int. Cl. D15—*04*

U.S. Cl. D12—66

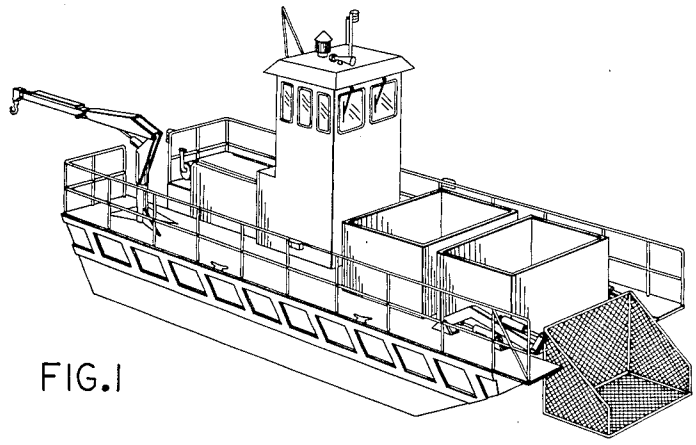

FIG. 1

FIG. 2

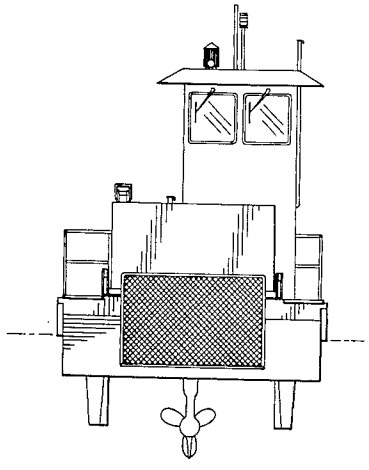

FIG. 3

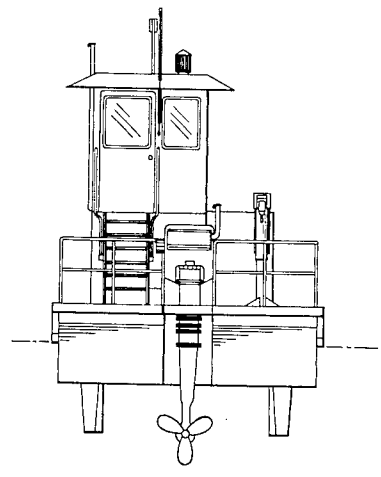

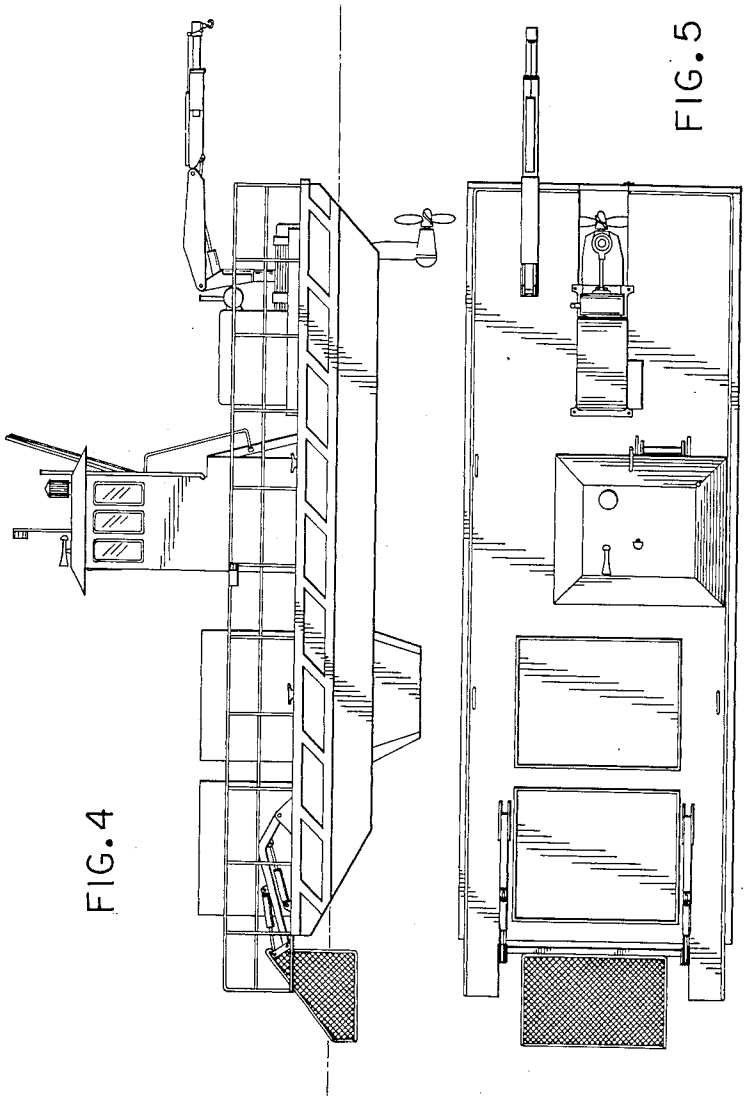

FIG. 4

FIG. 5

FIG. 1 is a perspective view of a workboat showing my new design;
FIG. 2 is a bow view of said workboat;
FIG. 3 is a stern of said workboat;
FIG. 4 is a side elevational view of said workboat; and
FIG. 5 is a top plan view of said workboat.

I claim:

The ornamental design for a workboat, substantially as shown and described.

References Cited

UNITED STATES PATENTS

D. 200,885	4/1965	Holtgrewe	D12—66
2,655,779	10/1953	Sanders	37—71 X

ALAN P. DOUGLAS, Primary Examiner