Nov. 1, 1932. R. L. WILCOX 1,885,648

UPSETTING MECHANISM

Filed Feb. 18, 1929 2 Sheets-Sheet 1

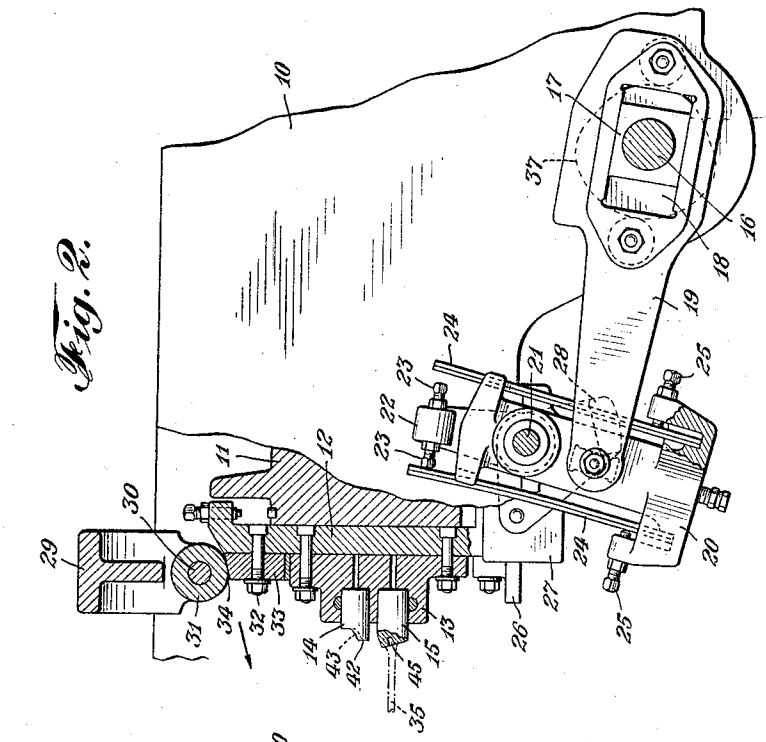

Fig. 2.

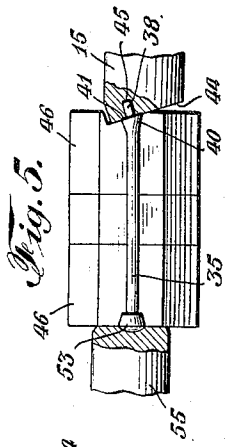

Fig. 5.

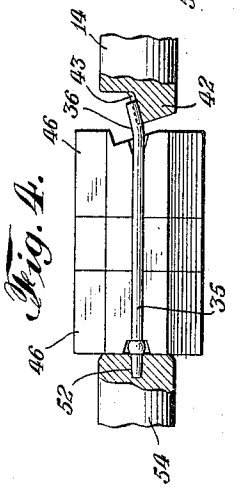

Fig. 4.

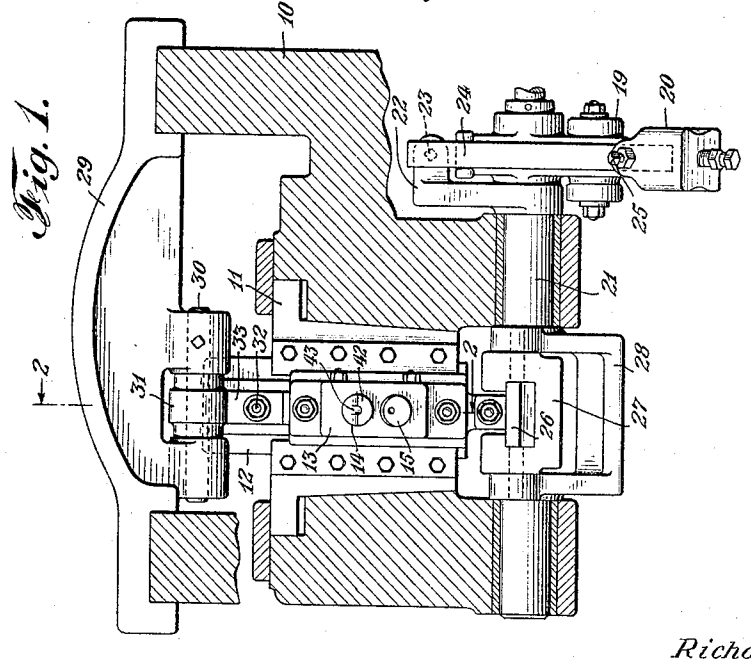

Fig. 1.



Fig. 3.

INVENTOR
Richard Lester Wilcox
BY George E. Hall
ATTORNEY

Nov. 1, 1932. R. L. WILCOX 1,885,648

UPSETTING MECHANISM

Filed Feb. 18, 1929 2 Sheets-Sheet 2

Fig. 2.

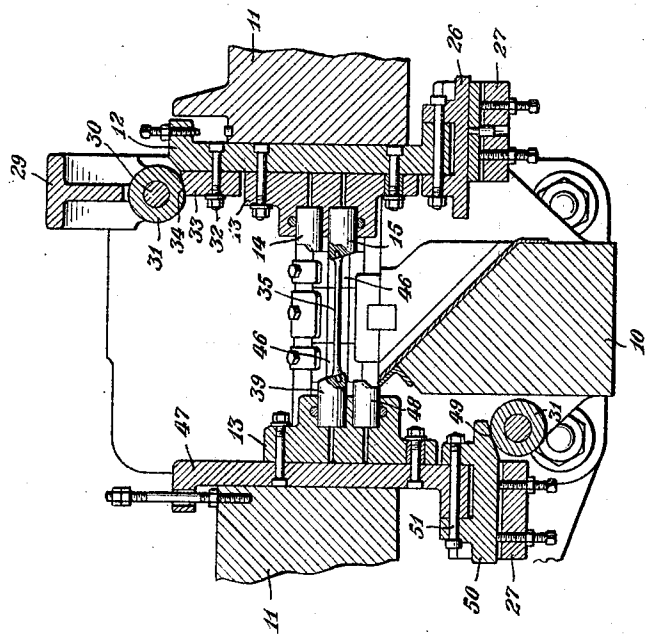

Fig. 6.

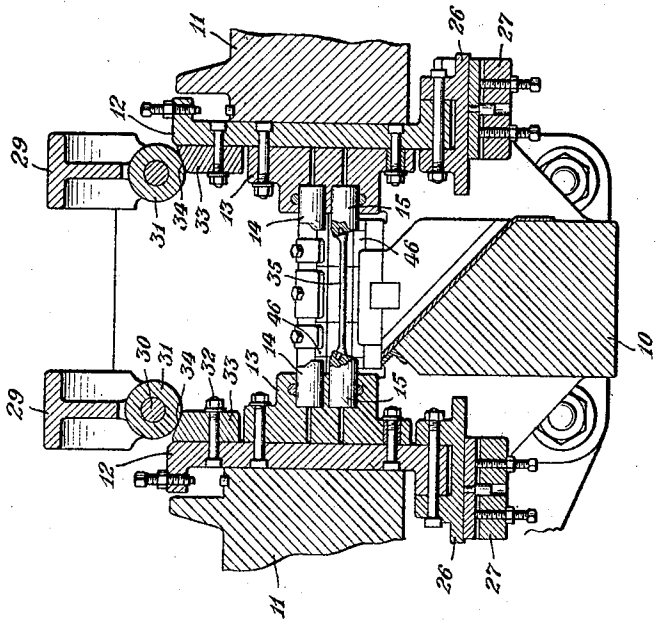

INVENTOR
Richard Lester Wilcox
BY George E. Hare
ATTORNEY

Patented Nov. 1, 1932 1,885,648

UNITED STATES PATENT OFFICE

RICHARD LESTER WILCOX, OF WATERBURY, CONNECTICUT, ASSIGNOR TO THE WATERBURY FARREL FOUNDRY AND MACHINE COMPANY, OF WATERBURY, CONNECTICUT, A CORPORATION OF CONNECTICUT

UPSETTING MECHANISM

Application filed February 18, 1929. Serial No. 340,907.

This invention relates to upsetting mechanism and particularly to means for upsetting a workpiece or blank, at an angle to its axis, and preferably to accomplish this result by holding the workpiece in a line that is at substantially a right angle to the punch slide as is usual in such machines.

Among other aims and objects of the invention may be recited the provision of means substantially as described, that is adapted for application to an upsetting machine or header of the ordinary type with the minimum addition of parts thereto, and wherein the blank is normally held in a position wherein its axis is substantially parallel with that of the punches.

My improved means for effecting the same will be apparent from an inspection of the accompanying drawings in connection with the description, hereinafter contained, and wherein one of the means for accomplishing the purposes of my invention is disclosed for an understanding of the same.

In the drawings, wherein like numerals of reference indicate like parts in the several figures;

Figure 1 is a transverse sectional view of an upsetting machine or header of the ordinary type, having my improved mechanism connected therewith;

Figure 2 is a side elevation thereof partly in section, the parts in section being taken generally upon line 2—2 of Figure 1;

Figure 3 is a view of a workpiece as presented to the tools;

Figure 4 is a side elevation of a set of dies, and punches, with one form of workpiece therebetween, and after operation thereon by the first die in each set;

Figure 5 is a similar view after operations thereon by the finishing punches;

Figure 6 is a fragmentary sectional elevation of a double end header or upsetting machine illustrating one form of workpiece and the finishing dies in contact therewith; and

Figure 7 is a view similar to that shown in Figure 6, the structure being designed to produce another form of workpiece.

Heretofore it has been the practice, where it is desired to upset a workpiece at an angle to its axis, to present the same to the punch with its axis at an angle to that of the punch, which reciprocates in a substantially straight path. This method is objectionable for many reasons, but chiefly because it requires special tools and equipment to hold the blank at the desired angle, which are not readily adapted for use with an upsetting or heading machine of the ordinary type without serious disarrangement of parts or entire reconstruction of the machine, thus producing in substance a special machine. These, and other objections to the known practice, are overcome in my improved means herein illustrated, which is one of the several forms of mechanisms by which the same result may be obtained.

In the means herein disclosed, the punch slide, in addition to its usual movement relative to the gate, has an independent movement thereon, whereby one or more of the punches as they move forward toward the dies travel in a path at an angle other than a right angle to the straight path movement of the punch slide.

In the drawings, 10 designates a fragmentary portion of the body member of an upsetting or heading machine of the usual type, having therein a gate 11, on the face of which is movably mounted the punch slide 12, and connected with which is the punch holder 13, having fixed therein, as is usual, the punches 14 and 15. This punch slide derives its movement relatively to the gate from a shaft 16, which carries a block 17 slidably mounted in the slot 18 in the connection arm 19, which is pivotally connected to the rock member 20 journaled on the rock shaft 21. Upon this shaft is fixed an arm 22, in which is threaded the stop screws 23.

The yielding plates 24, which are held in their lower ends in the rock member 20 by the screws 25, contact at their upper ends against the heads of the stop screws 23, and provide a flexible means for imparting the movement of the rock member 20 to the rock shaft 21 through the arm 22.

The foot plate 26, slidable in the cradle 27 connected with the yoke 28 on the rock shaft 21, provides a convenient connection between the punch slide and shaft, whereby

the rocking movement of the shaft is transmitted into a straight line movement of the punch slide relatively to the gate, at the same time permitting reciprocatory movement of the latter.

In upsetting machines or headers of the ordinary type for straight heading, the movement of the punch slide is limited by stop screws or the like and is usually locked in these positions so as to be held rigid during the engagement of the punch with the workpiece. In my improved means the slide is not so locked when the final punch is performing its function, at which time the punch slide derives an independent movement against the action of the mechanism actuated from the shaft 16, which gives the punch its reciprocatory movement. This mechanism comprises in part a supporting member 29, in which is a shaft 30 having thereon a cam roll 31.

Fixed to the punch slide near its upper end by the bolts 32 or the like, is a plate 33 having a cam face 34 thereon which during the movement of the punch slide contacts with the cam roll 31. The upper or first punch 14 is constructed with a projecting nose 42, the upper face of which is at an angle to the axis of the punch, and having a groove 43 therein. The lower or second punch 15 has an angular front face 44 with a recess 45 therein of substantially the same diameter as the workpiece 35 and occupying the same relative angle to its axis as does the groove 43 to the axis of the punch 14. These punches are shaped to produce the particular form of article illustrated herein. Other shaped dies, will, of course, produce different forms of articles, and I therefore desire it to be understood that my invention is not limited to the forms of dies or finished article herein illustrated.

Dies of various forms and types may be used to support and hold the workpiece, those herein shown being designated 46, and are designed for double end heading. In such a case a second punch slide 47 is operatively mounted opposite the first mentioned punch slide and is provided with two punches 48 and 39.

Punches 14 and 48 engage the opposite ends of the workpiece at substantially the same time, likewise punches 15 and 39. As the path of travel of the punch 15 is at an angle to the axis of the workpiece, the recess 45 is located at a point above the axis of the punch, as is clearly shown in Figure 5.

In operation, the punch 14 first engages the workpiece 35, which is held in the dies 46. As the gate moves forward the outer end of the workpiece 35 enters the grooves 43 in the punch 14 and by engagement with the floor thereof, such end is bent, turned or deflected at an angle to its axis, leaving, after the operation, an offset portion 36, substantially as shown in Figure 4. The punch 14 is then withdrawn, the punch slide moves upwardly through the action of the connection arm 19 and associated parts and during the forward movement of the gate the cam face 34 on the plate 33 contacts with the cam roll 31. The continued pressure of the punch slide actuating mechanism and forward movement of the gate causes the punch slide and the punch 15 associated therewith to move downwardly a limited distance. This gives movement to the punch 15 in an angular path, substantially parallel with the angularity of the cam face 34. During this action one of the sets of plates 24 yields sufficiently to permit the supplemental movement of the punch slide and without impairing the travel of the connection arm 19, which is positively moved by the cam 37 on the shaft 16.

The angular travel of the punch 15 takes place when forming the article illustrated herein during the engagement of the punch with the workpiece, at which time the bent or offset portion 36 enters the recess 45 in said punch. The workpiece is thus subjected to the pressure of the punch 15 while moving in this angular path, and thus upsetting the blank at an angle to its axis and thereby producing the article shaped substantially as shown in Figure 5. During the withdrawal of the gate 11 the punch slide moves upwardly again as the plates 24 assume their normal position, the cam face 34 retaining its contact with the cam roll 31 until moved out of engagement therewith. At this time the plates 24 are restored to their substantially normal positions and the punch slide is moved downwardly through the action of the connection arm 19, the operations being repeated as before.

In the finished article herein illustrated, a tenon 38 is formed on the end of the workpiece and is substantially the same diameter, the adjacent portion 40 being upset to conform to the shape of the opening in the die 46 with the face 41 thereon at substantially a right angle to the axis of the tenon 38. Thus, there is no upsetting at the extreme end of the workpiece, but at a point adjacent thereto. This, however, is only one of the many forms of articles that may be produced by this means, and the upsetting of the blank may be at the extreme end if desired.

The punches 48 and 39 perform operations on the workpiece in the same manner and with the same result as is now well known in the art, the punch 54 first producing a cone head 52 and the punch 55 the finished head 53.

In Figures 6 and 7 I have illustrated my improved mechanism as applied to a double end header or upsetting machine, wherein there are two gates that move toward and away from each other and produce finished workpieces substantially as shown herein.

In Figure 6 the cam rolls 31 are both above the punch slide. In Figure 7 one cam roll is above the punch slide and the other below. The angular upsetting at the ends of the workpiece, as shown in this latter figure, projects in opposite directions. The cam 49 in Figure 7 is formed on the shoe 50 connected with the punch slide by the bolt 51. Thus, by various arrangements of the punch slides, workpieces can can be produced with an angular upset portion at either or both ends and project in any direction, as may be desired.

There are minor changes and alterations that may be made within my invention, and I would therefore have it understood that I do not limit myself to the exact construction herein shown and described, but claim all that falls fairly within the spirt and scope of the appended claims.

What I claim as new is:—

1. In combination with a die for holding a workpiece with a projecting end disposed at an angle to that portion of the workpiece within the die, a reciprocating gate movable toward and from the die, a punch carried by the gate for upsetting said projecting angular end of the workpiece, and means to move the punch transversely of the movement of the gate during the forward movement of the gate, whereby the punch will travel in an angular path, the angle of which is substantially the same as that of the end of the workpiece and by its engagement therewith upsets said end while the workpiece remains rigid in the die.

2. In mechanism for bending a portion of a workpiece and upsetting such bent portion, comprising in combination with a die that will hold the workpiece with an end projecting out of the die, a gate reciprocating toward and from the die, a bending punch carried by the gate, which engages the workpiece and bends said projecting end while the gate and punch are travelling in a substantially straight path, an upsetting punch carried by the gate, means for moving the punches on the gate transversely to the movement thereof whereby the bending punch is moved out of alignment with the workpiece and the upsetting punch into substantial alignment therewith and other means to move the upsetting punch transversely of the movement of the gate during the next working stroke of the gate toward the die, whereby the rectilinear path of the gate and that of the punches thereon will produce an angular motion of the upsetting punch corresponding with the bent end of the workpiece and by engagement with such bent end will upset the same.

3. In combination with a work holder to hold a workpiece with one end projecting, a reciprocating gate movable toward and away from the workpiece, a slide on the gate, plural punches carried by the slide, yielding means to move the slide transversely of and during the motion of the gate thereby to shift the punches to successively align with the workpiece, the first of said punches during the working stroke of the gate when it is aligned with the workpiece, engaging and bending said projecting end at an angle to that portion of the workpiece in the work holder, and co-operating means that will engage and move the slide transversely of the gate and during a succeeding working stroke will move the second punch at an angle to the path of movement of the gate and by its engagement with the bent portion will upset the same, this last mentioned transverse movement of the slide being against the tension of the said yielding means.

4. In combination with a work holder and a reciprocating gate, a slide carried by the gate and movable transversely thereof, a plurality of punches carried by the slide, means for holding the slide against relative movement on the gate while one of the punches engages the workpiece in the work holder and bends a portion thereof, means to move the slide on the gate so as to bring another punch into substantial alignment with the workpiece, and co-operating means to move the slide transversely of the movement of the gate during a succeeding working stroke thereof so as to cause the last mentioned punch to move in an angular path that is at substantially the same angle as the bent portion of the workpiece thereby to upset said bent portion, said co-operating means including in part an abutment and a cam carried by the slide which is projected into line with the abutment when the last mentioned punch is shifted to present it in such position to operate upon the workpiece.

5. In combination with a work holder and a reciprocating gate, a slide carried by the gate and movable transversely thereof, a plurality of punches carried by the slide, means for holding the slide against relative movement on the gate while one of the punches engages the workpiece in the work holder and bends a portion thereof, means to move the slide on the gate so as to bring another punch into substantial alignment with the workpiece, and co-operating means to move the slide transversely of the movement of the gate during a succeeding working stroke thereof so as to cause the last mentioned punch to move in an angular path that is at substantially the same angle as the bent portion of the workpiece thereby to upset said bent portion, said co-operating means including in part an abutment and a cam, one being movable relative to the other and projected into line with each other when the last men-

tioned punch is shifted to present it in such position to operate upon the workpiece.

6. In combination with a work holder and a reciprocating gate, a slide carried by the gate and movable transversely thereof, a plurality of punches carried by the slide, means for holding the slide against relative movement on the gate while one of the punches engages the workpiece in the work holder and bends a portion thereof, means to move the slide on the gate so as to bring another punch into substantial alignment with the workpiece, and co-operating means to move the slide transversely of the movement of the gate during a succeeding working stroke thereof so as to cause the last mentioned punch to move in an angular path that is at substantially the same angle as the bent portion of the workpiece thereby to upset said bent portion, said co-operating means including in part a cam carried by the slide and a roll rotatable about a fixed axis and positioned to engage the cam thereby to move the slide upon such movement of the gate as to cause the cam to engage the roll.

7. In an upsetting machine, an open ended die, a gate reciprocable toward and from the die to produce an upsetting force, a slide mounted on the gate for transverse movement relative thereto, a plurality of punches on the slide in transverse spaced positions for co-operation with the die, the gate during its reciprocation propelling one of the punches in an axial direction to operate on a workpiece in the die, means for shifting the slide to align another of the punches with the die, and co-operating means becoming engaged upon said shifting effective to move the slide transversely of the gate when the latter is operated for a successive working on the workpiece, to thereby move said last mentioned punch at an angle to the axis of the die for working on a portion of the workpiece projecting from the die.

8. An upsetting mechanism, comprising a work holder provided with a passage terminating in an open die recess, the passage adapted to receive and support a length of rod with an end extending out of said recess at an angle to this passage, in combination with an upsetting punch adapted to move axially of the angle end of the workpiece and at an angle to the passage to upset the same, and mechanism for so moving the punch, including a gate movable in a substantially straight path axially of the passage, a punch holder on the gate, and means effective during the upsetting stroke of the gate to move the punch holder transversely to the path of movement of the gate, whereby the two right angled movements of the gate and the punch holder will produce a resultant angular movement of the punch holder to move the punch as aforesaid.

9. Mechanism for upsetting a workpiece or blank at an angle to the axis of the length thereof, comprising a work holder for holding the workpiece or blank with one end projecting therefrom; a gate movable toward and away from the work holder; a punch carrying member on the gate movable transversely of the path of movement of the gate and carrying bending and upsetting punches; yielding means for moving the punch carrier on the gate; and a fixed abutment in the path of the punch carrying member in one position of the same, the yielding means tending in such position to keep the punch carrier against the abutment during movement of the gate toward the work holder so that the punch carrier has a timed horizontal and vertical motion that produces a resultant angular motion of the upsetting punch to upset the angular portion of the workpiece and blank.

10. Mechanism for upsetting a workpiece or blank at an angle to the axis of the length thereof, comprising a work holder for holding the workpiece or blank with one end projecting therefrom; a gate movable toward and away from the work holder; a punch carrying member on the gate movable transversely of the path of movement of the gate and carrying bending and upsetting punches; yielding means for moving the punch carrier on the gate; and a fixed abutment in the path of the punch carrying member in one position of the same, the yielding means tending in such position to keep the punch carrier against the abutment during movement of the gate toward the work holder so that the punch carrier has a timed horizontal and vertical motion that produces a resultant angular motion of the upsetting punch to upset the angular portion of the workpiece and blank, the means for moving the punch carrier on the gate being so timed relative to the reciprocation of the gate as to shift the punch carrier to a position out of line with the abutment whereby to align the bending punch with the workpiece or blank.

In testimony whereof, I have hereunto affixed my signature.

RICHARD LESTER WILCOX.