US00D511386S

(12) United States Design Patent

Emerson

(10) Patent No.: US D511,386 S
(45) Date of Patent: ** Nov. 8, 2005

(54) **ELECTROPHORESIS CASSETTE**

(75) Inventor: **Rick E. Emerson**, San Jose, CA (US)

(73) Assignee: **Cambrex Bio Science Rockland, Inc.**, Rockland, ME (US)

(**) Term: **14 Years**

(21) Appl. No.: **29/198,258**

(22) Filed: **Jan. 23, 2004**

(51) **LOC (8) Cl.** **24-02**
(52) **U.S. Cl.** **D24/233**
(58) **Field of Search** D24/233; 204/615–616, 204/618–620; D10/46

(56) **References Cited**

U.S. PATENT DOCUMENTS

4,194,963	A	*	3/1980	Denckla	204/616
4,414,073	A	*	11/1983	Iwata et al.	204/616
4,915,811	A	*	4/1990	Yamamoto et al.	204/619
5,288,465	A	*	2/1994	Margolis	204/619
5,411,657	A	*	5/1995	Leka	204/618
5,543,023	A	*	8/1996	Lugojan	204/618
5,569,369	A	*	10/1996	Leffler et al.	204/620
5,989,403	A	*	11/1999	Provonchee	204/619
2003/0127331	A1	*	7/2003	Leka	204/466

OTHER PUBLICATIONS

Photos and/or drawings depicting devices of a variety of types; pp. 1–30.

* cited by examiner

Primary Examiner—Cathy Anne MacCormac
Assistant Examiner—Melanie Levy
(74) *Attorney, Agent, or Firm*—Woodcock Washburn LLP

(57) **CLAIM**

The ornamental design for an electrophoresis cassette, as shown and described.

DESCRIPTION

FIG. **1** is a perspective view of an electrophoresis cassette showing my new design;
FIG. **2** is a top plan view thereof;
FIG. **3** is a bottom plan view thereof;
FIG. **4** is a front elevational view thereof;
FIG. **5** is a rear elevational view thereof;
FIG. **6** is a left side view thereof; and,
FIG. **7** is a right side view thereof.
The broken lines in the drawings are for illustrative purposes only, and form no part of the claimed design.

1 Claim, 5 Drawing Sheets

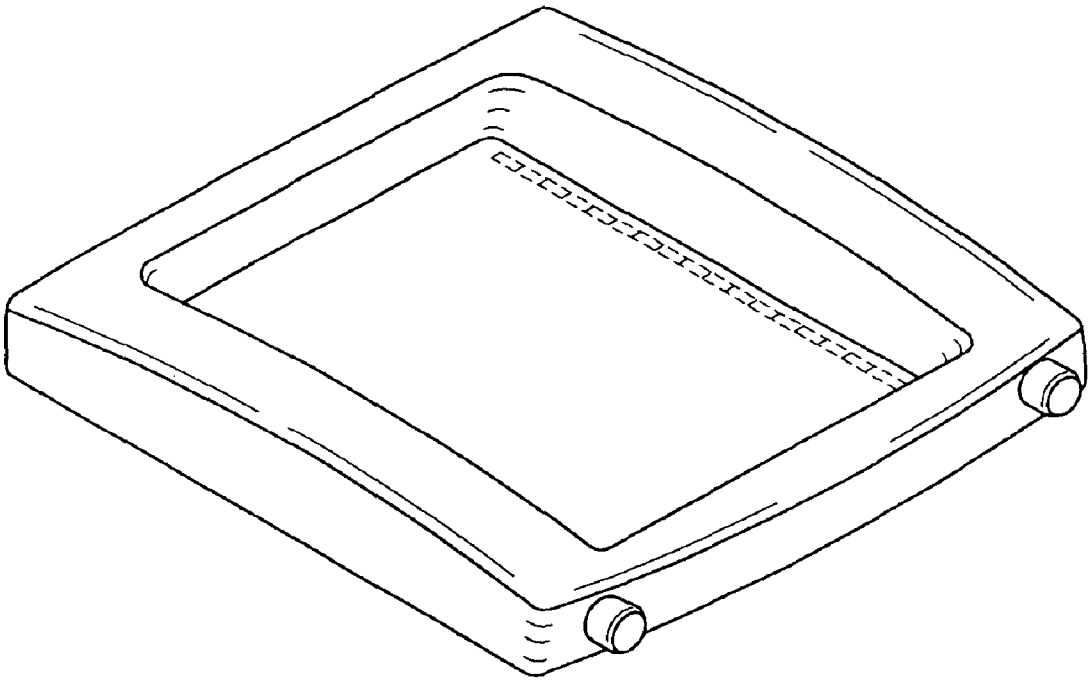

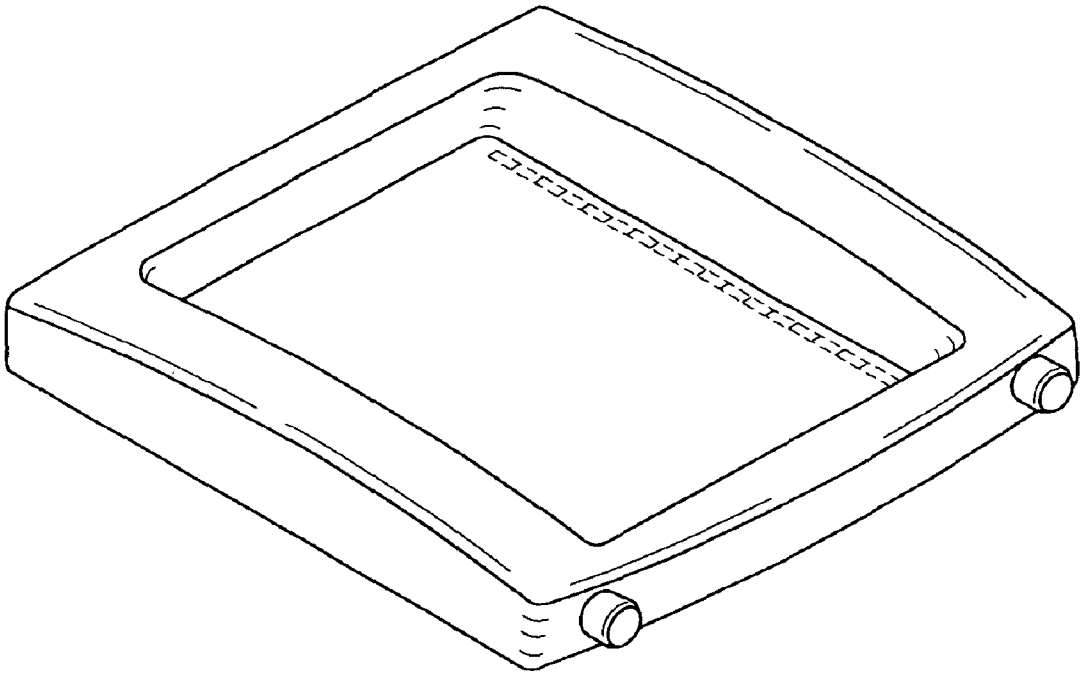

Fig. 1

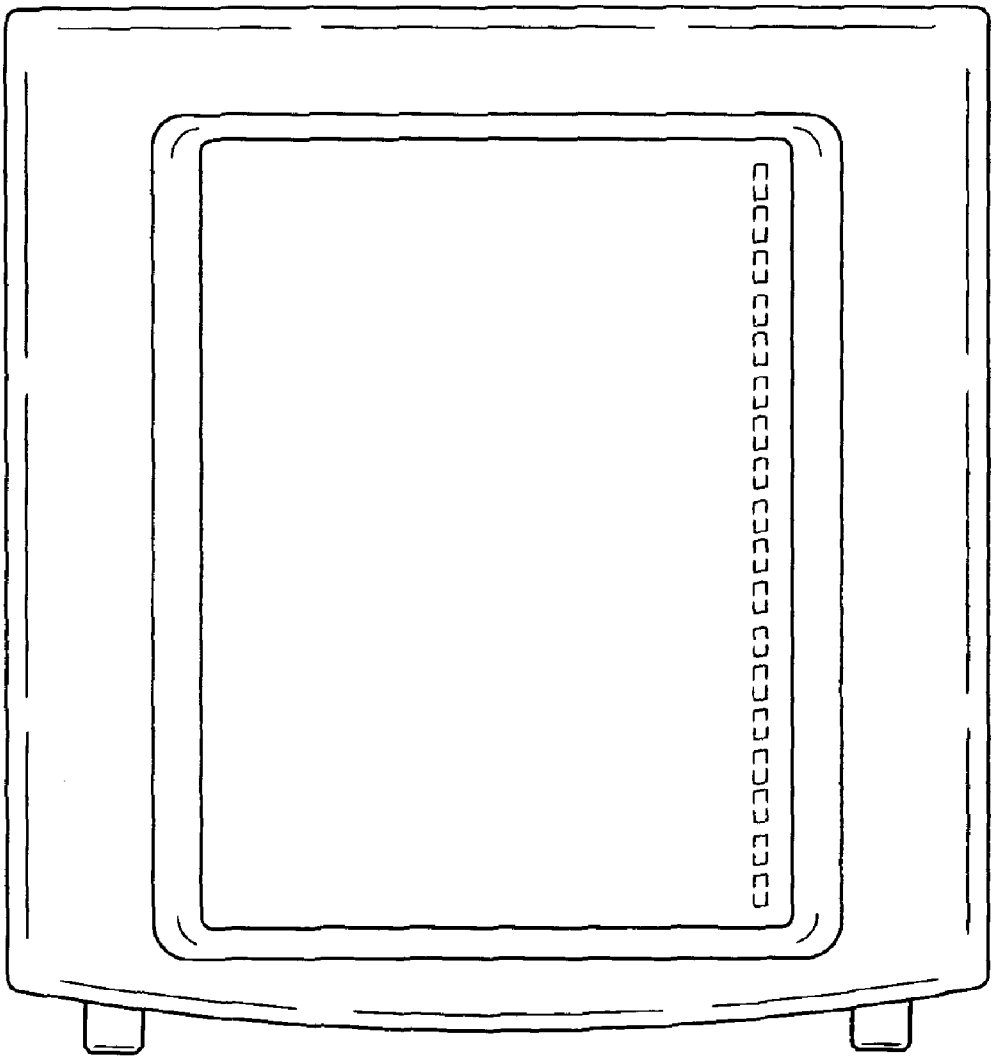

Fig. 2

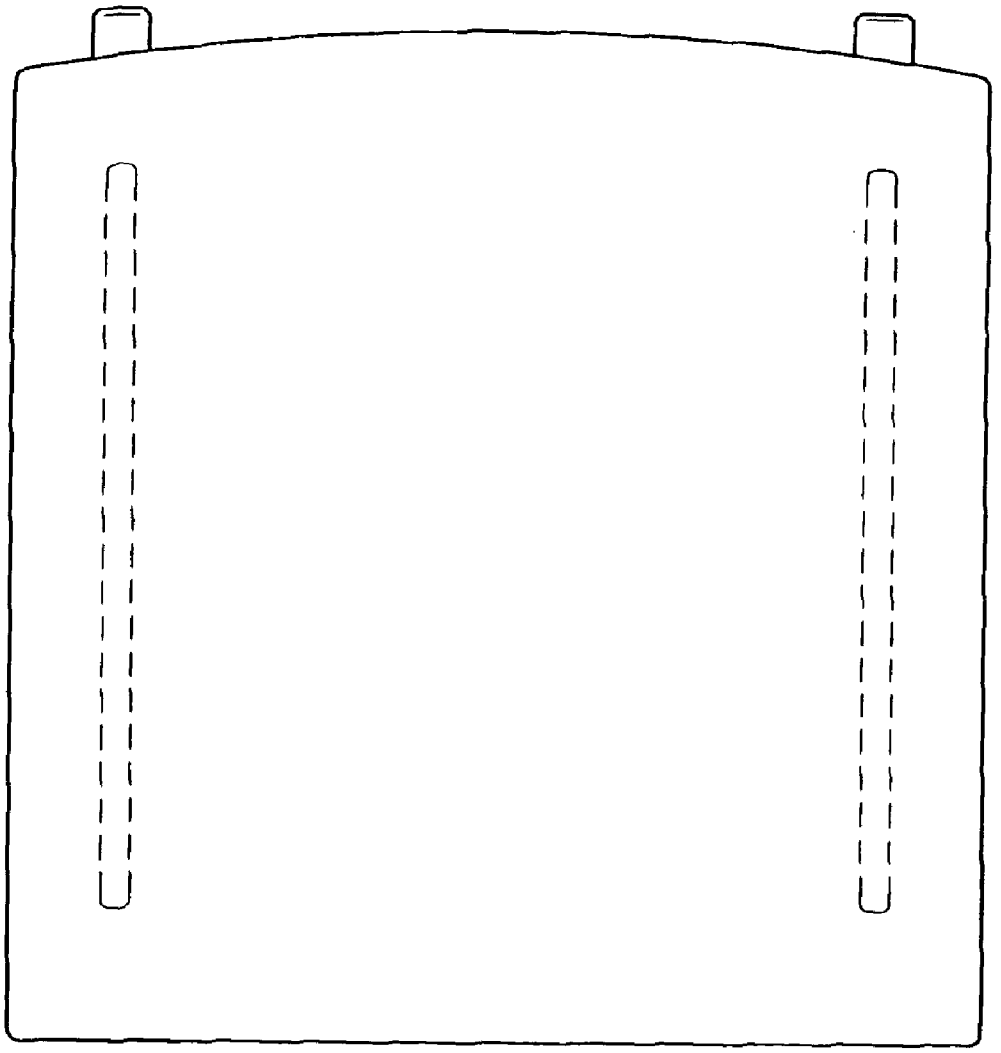

Fig. 3

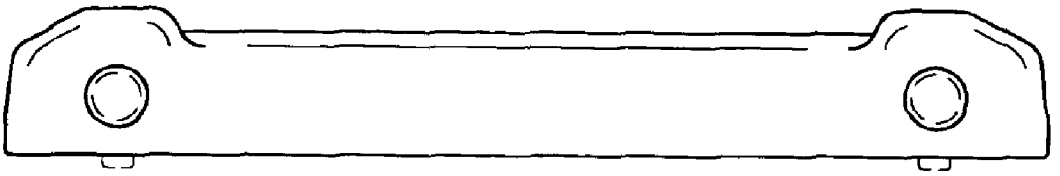

Fig. 4

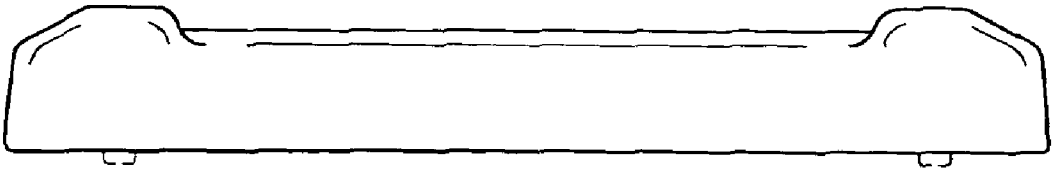

Fig. 5

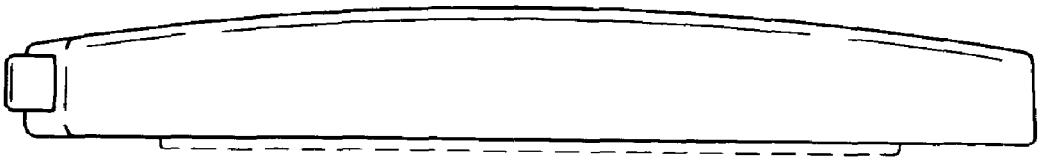

Fig. 6

Fig. 7