Dec. 14, 1965 E. L. NOOKER ETAL 3,223,037

INNERBODY CONTINUOUS ROD WARHEAD

Filed July 28, 1961 4 Sheets-Sheet 1

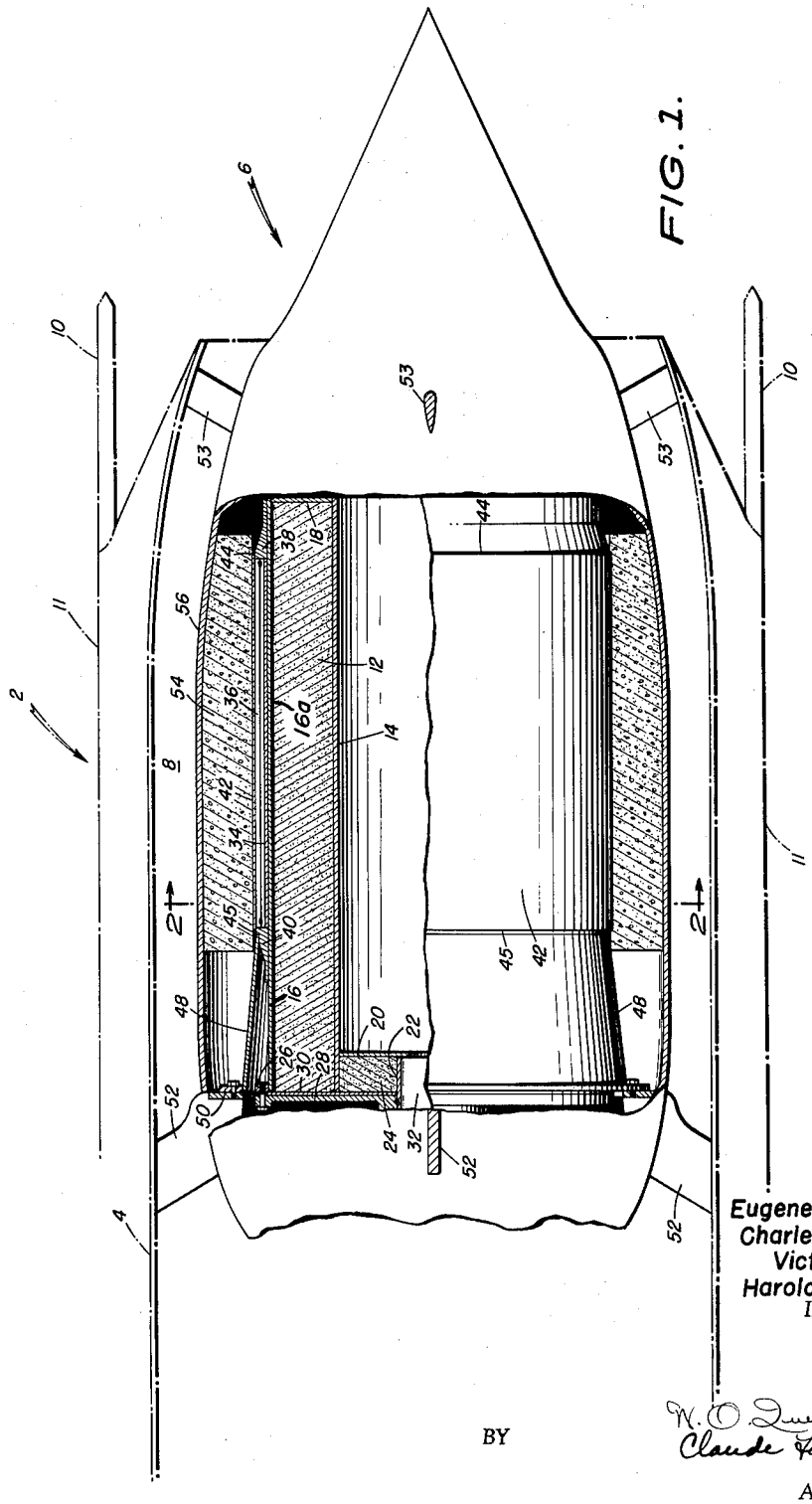

FIG. 1.

Eugene L. Nooker
Charles R. Brown
Victor J. Dietz
Harold S. Morton
INVENTORS

BY

N. O. Luxenberg
Claude Funkhouser

ATTORNEYS

Dec. 14, 1965 E. L. NOOKER ETAL 3,223,037

INNERBODY CONTINUOUS ROD WARHEAD

Filed July 28, 1961 4 Sheets-Sheet 2

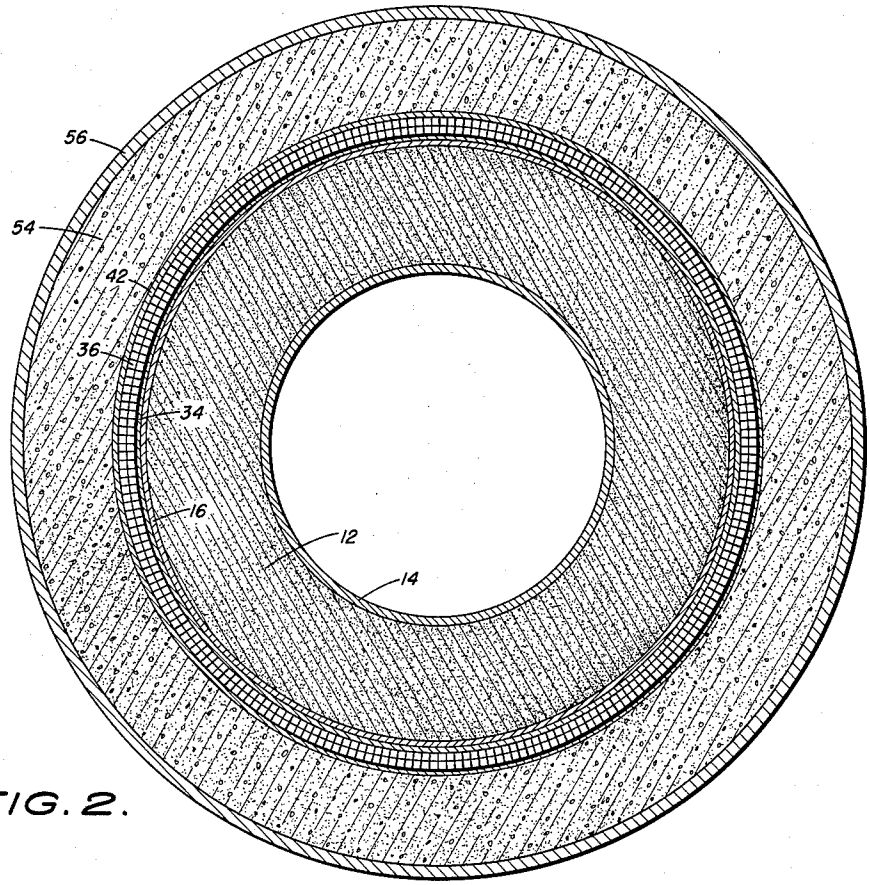

FIG. 2.

FIG. 3.

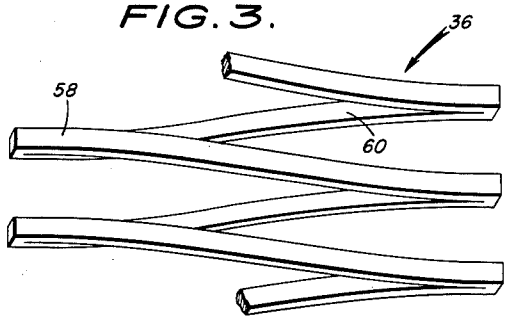

Eugene L. Nooker
Charles R. Brown
Victor J. Dietz
Harold S. Morton
INVENTORS

BY W. O. Quesenberry
Claude Funkhouser
ATTORNEYS

Dec. 14, 1965 E. L. NOOKER ETAL 3,223,037

INNERBODY CONTINUOUS ROD WARHEAD

Filed July 28, 1961 4 Sheets-Sheet 3

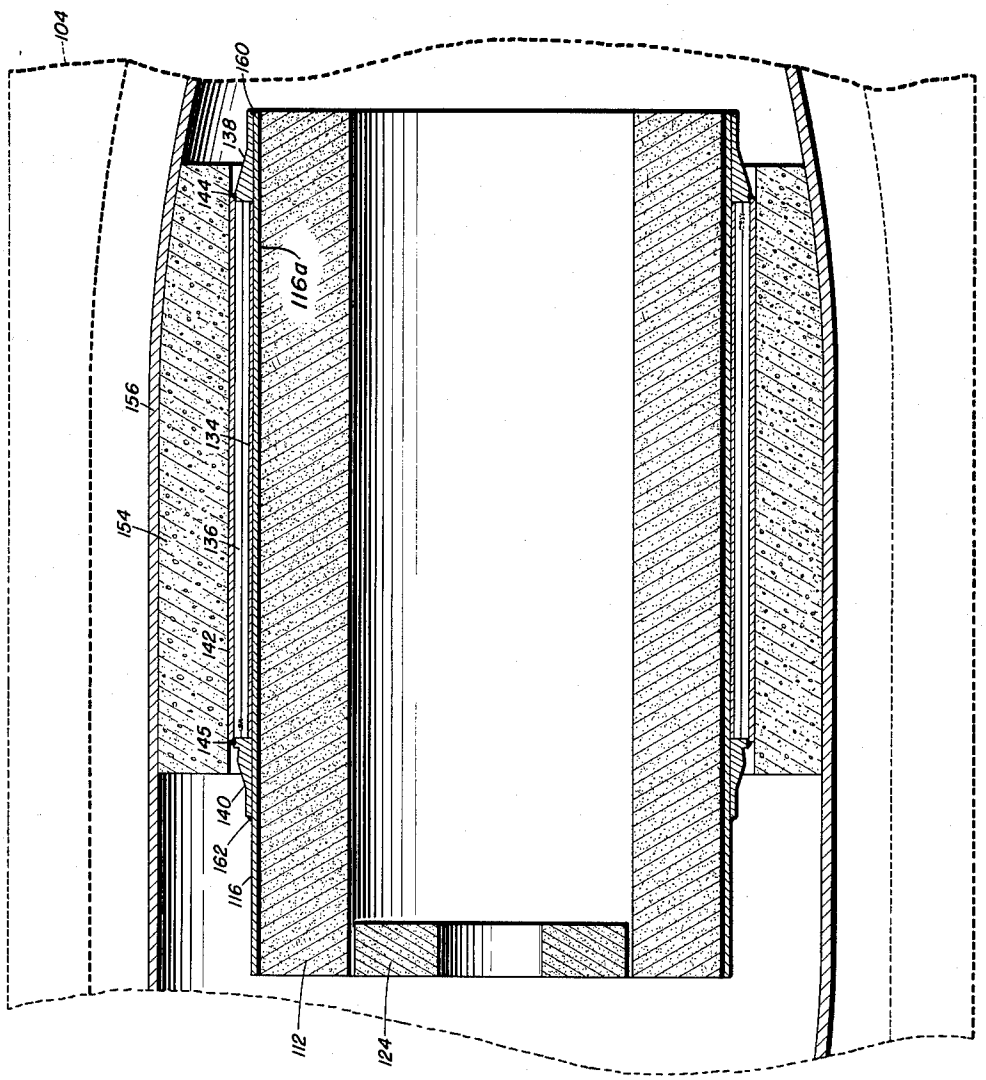

FIG. 4.

Eugene L. Nooker
Charles R. Brown
Victor J. Dietz
Harold S. Morton
INVENTORS

BY W. O. Turnbow
Claude Funkhouser

ATTORNEYS

Dec. 14, 1965 E. L. NOOKER ETAL 3,223,037

INNERBODY CONTINUOUS ROD WARHEAD

Filed July 28, 1961 4 Sheets-Sheet 4

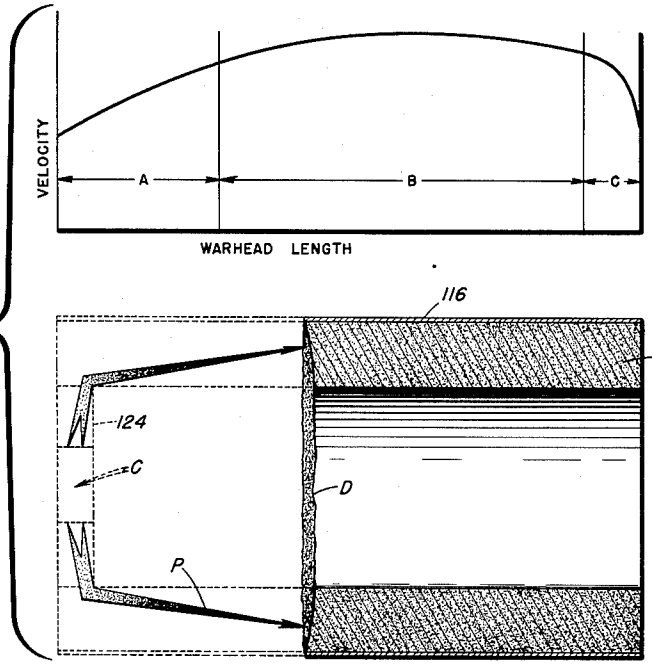

FIG. 5.

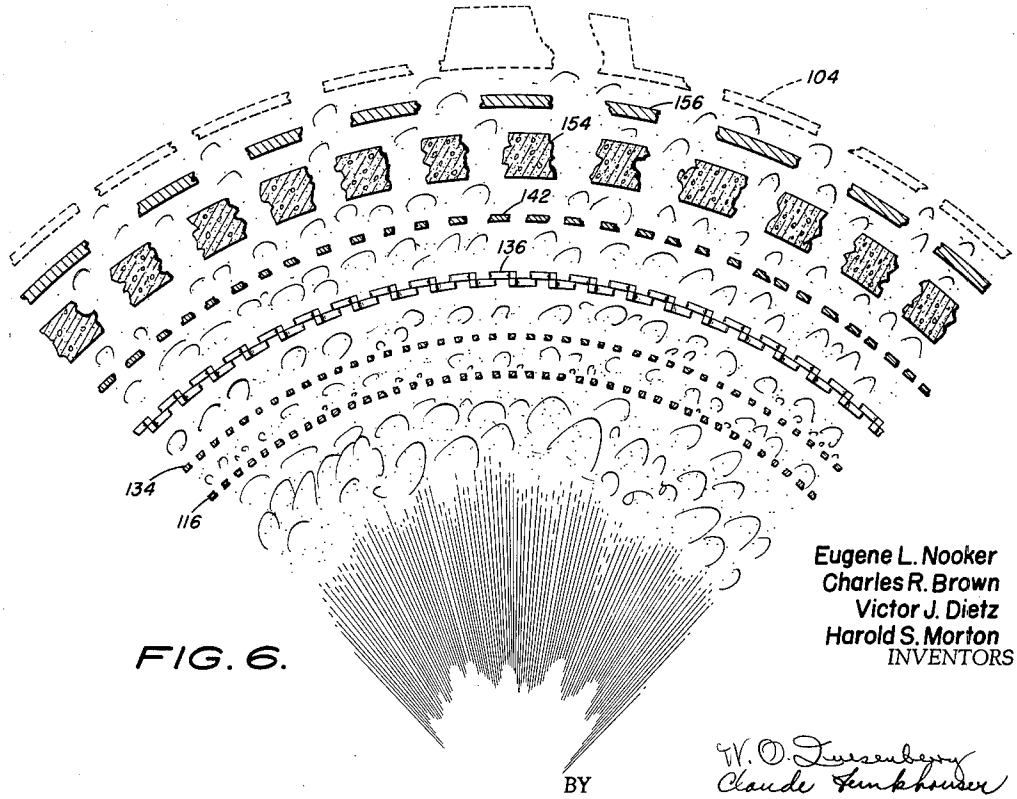

FIG. 6.

Eugene L. Nooker
Charles R. Brown
Victor J. Dietz
Harold S. Morton
INVENTORS

BY W. O. Duesenberg
Claude Funkhouser

ATTORNEYS

United States Patent Office 3,223,037 Patented Dec. 14, 1965

3,223,037

INNERBODY CONTINUOUS ROD WARHEAD

Eugene L. Nooker, Silver Spring, Charles R. Brown, Takoma Park, Victor J. Dietz, Silver Spring, and Harold S. Morton, Takoma Park, Md., assignors to the United States of America as represented by the Secretary of the Navy

Filed July 23, 1961, Ser. No. 128,344
11 Claims. (Cl. 102—67)

This invention relates generally to warheads for missiles; more particularly, it relates to an improved continuous rod warhead for disposition within a missile.

In certain missiles, particularly those employing air breathing engines of the ramjet type, it has been found desirable to carry the warhead within the interior of the missile, where it is surrounded by a substantial amount of missile structure. In co-pending patent application Serial No. 590,078, filed June 7, 1956 and entitled "Continuous Rod Warhead," there is shown a warhead including a projectile disposed about an annular high-explosive charge and consisting of rods of rectangular cross-section arranged in layers and with their alternate opposite ends rigidly connected, so that when said charge is detonated, the projectile will be propelled as a single continuous ring. The present invention relates to such a continuous rod warhead for use within the interior of a missile.

It is the primary object of this invention to provide a continuous rod warhead so constructed as to allow it to be carried within the interior of a missile, and to permit the continuous rod projectile to be propelled outwardly from within the confines of a substantial amount of surrounding missile structure without being damaged.

Another object of the invention is to provide a filter for a continuous rod warhead, so constructed as to minimize the adverse effects on the continuous rod projectile of the detonation wave produced by the high explosive charge of the warhead.

It is also an object of the invention to provide a continuous rod warhead so constructed as to compensate for variations in the explosive impulse occurring over the warhead length.

A further, more specific, object of the invention is to provide a continuous rod warhead so constructed as to allow a continuous rod projectile to be carried within and propelled outwardly from the innerbody of a ramjet missile without being damaged by substantial surrounding missile structure.

Other objects and many of the attendant advantages of this invention will be readily appreciated as the same becomes better understood by reference to the following detailed description when considered in connection with the accompanying drawings, wherein:

FIG. 1 is an elevation, partly in section, of the forward end of a ramjet missile, showing the construction of the innerbody continuous rod warhead of the invention;

FIG. 2 is a view in cross-section, taken generally along the line 2—2 in FIG. 1, of the innerbody continuous rod warhead of the invention;

FIG. 3 is a view in perspective of a portion of a continuous rod projectile in a partially expanded position;

FIG. 4 is a view in section of a continuous rod warhead constructed according to the invention, showing the essential components thereof;

FIG. 5 is a diagrammatic view, including a graph, showing the manner in which the high explosive charge of the warhead functions upon detonation; and

FIG. 6 is a diagrammatic view of a sector of a warhead constructed according to the invention, as it would look in cross-section an instant after the explosion thereof.

The positioning of a warhead within a guided missile is a complex problem, as the warhead must be integrated with the many other components of the missile to obtain efficient and unified structural design. When warheads of the continuous rod type are employed it has been the practice to locate the warhead with the continuous rod projectile on the outer diameter of the missile. This location was required to insure that the rods making up the projectile would not have to pass through any substantial amount of missile structure, since collision with such structure could damage the rods and hence cause the continuous ring projectile to prematurely break up or otherwise malfunction.

The outer diameter location for the continuous rod warhead obviously is a controlling factor in the design of the missile. In certain missiles it would be desirable to locate the warhead somewhere within the interior of the missile, such a position enabling a more efficient design. However, as has been indicated, when warheads of the continuous rod type are employed a problem has existed in so disposing them internally in that the continuous rod projectile must then pass through considerable surrounding missile structure, which may cause it serious damage. This invention is directed to a continuous rod warhead construction whereby the warhead can be carried within the interior of a missile, and wherein the continuous rod projectile is propelled outwardly into expanded position without being damaged in its expansion by the surrounding missile airframe.

While there are numerous instances where it would be desirable to locate the warhead within the interior of a missile, such is especially desirable in the case of missiles of the ramjet type. The invention will therefore be described with relation to a ramjet missile, although it must be remembered that the warhead of the invention is not limited to use with such a missile.

In missiles of the ramjet type there is an open duct through the center thereof to allow air to flow into the ramjet engine. In order to obtain the desired airflow an innerbody member is secured within the missile at the forward end of the duct, the air then passing over and around the innerbody upon entering the duct. It has been found desirable to utilize the interior of this innerbody to house the warhead of the missile.

Referring now to FIG. 1 of the drawing, the forward end of a missile is indicated generally by phantom lines at 2. The missile 2 has an outer cowling 4, and an innerbody 6 mounted concentrically therewithin. A passageway 8 exists between the innerbody 6 and the cowling 4. Air entering the missile flows over the innerbody 6, through the passageway 8, and thence into the combustion chamber of the missile (not shown), the presence of the innerbody 6 being necessary to properly compress the air. Attached to the cowling 4 are pitot probes 10, the probes being mounted on island-like housings 11 attached to the cowling 4. The islands 11 normally contain electrical cables, tubing, and numerous other elements necessary to the operation of the missile, these not being illustrated to preserve clarity in the drawings.

Disposed within the innerbody 6 is a continuous rod warhead, the construction of which is shown in FIGS. 1 and 2. In said views, an annular high explosive charge is shown at 12, said charge having an inner liner 14 therewithin, the purpose of which is to aid in the forming of the annular charge and to hold it in position. A steel filter 16 surrounds the exterior of the charge 12. A forward end plate 18 is secured to the liner 14 and the filter 16, and a detonation cap tray consisting of an aft end plate 20 and a booster cup 22 is shown attached at the aft end of the liner 14, a detonation cap of high explosive 24 being disposed within said detonation cap tray. The filter 16

has a flange 26 secured at the aft end thereof, a cover plate 28 having a gasket 30 attached thereto being secured to said flange 26 by bolts or other suitable fastening means. A detonator and booster assembly 32 for detonating the warhead is shown disposed within the booster cup 22, suitable fusing (not shown) being employed to initiate said detonator.

Disposed about, and positioned centrally of, the charge 12, and over the steel filter 16, is a lead filter sheet 34, and surrounding the lead filter 34 is a continuous rod projectile, indicated generally at 36. The continuous rod projectile, as is best shown in FIGS. 2 and 3, consists of a large number of rectangular rods arranged in overlapping relationship with their alternate opposite ends connected rigidly together, as by welding. A portion of the projectile 36 is shown partially expanded in FIG. 3, wherein will be seen an outer rod 58 and an inner rod 60. A typical continuous rod projectile will consist of some 200 pairs of rods. The construction and operation of the projectile is more fully set forth in the aforementioned patent application Serial No. 590,078.

The projectile 36 is held in position by a forward end cylinder 38 and an aft end cylinder 40, said cylinders being secured to the steel filter 16 by welding. A thin stress skin 42 of steel is disposed over the projectile 36 and is secured to the cylinders 38 and 40 by welds at 44 and 45. Prior to installation of the stress skin 42 a plastic matrix is forced into the spaces existing between the rods comprising the projectile 36. A suitable matrix material is the product known as Laminac No. 4116.

Attached to the cylinder 40 by a weld 46 is a support cone 48, which cone is seated in an annular groove in cylinder 40 and carries a support flange 50 thereon. The support flange 50 is secured, as by bolt means, to the lower ends of a plurality of struts 52, which struts serve to mount the innerbody 6 within the missile. Similar struts 53 are utilized at the forward end of the innerbody to further support the same within the missile. Disposed about the support cone 48, the stress skin 42, and the other components of the warhead is a mass of foam material 54, such as Lockfoam Type C608, said foam completely filling the space between the warhead and the outer skin of the innerbody 6, shown at 56.

The steel filter 16 has a lining 16*a* therein of a material such as asphalt, said lining being referred to as a hot melt layer and being on the order of 0.01 to 0.02 inch in thickness. The primary purpose of the hot melt layer is to insure that shocks occurring in handling the warhead, such as by dropping it, do not detonate the high explosive; but it also acts as a filter between the steel filter 16 and the high explosive charge 12.

The structure described is that of an actual warhead as employed in a typical ramjet missile. Many of the components illustrated, such as the support cone 48, the struts 52, and the support flange 50, are employed only to structurally attach the warhead head to the missile, and are not involved in its actual functioning. As has been stated, the warhead of the invention is capable of use in the interior of numerous missiles and is not limited to ramjet missile innerbodies.

Accordingly, and in order to obtain a clearer understanding of the inventive concept of the warhead, the essential components of a warhead constructed according to the invention are shown in FIG. 4, wherein is seen an annular high explosive charge 112, a detonation cap 124, a steel filter 116, a lead filter sheet 134, a continuous rod projectile 136, a forward end cylinder 138, an aft end cylinder 140, a stress skin 142, foam 154, and a confining skin 156. These components are similar to the like components shown in FIG. 1. The presence of surrounding missile structure is indicated in broken lines at 104.

For purposes of clarification, the relative thicknesses of the thinner components shown in FIG. 4 are greatly exaggerated. In an actual warhead, the steel filter 116 would have a thickness of about 0.035 inch, the lead filter 134 about 0.03 inch, the rods comprising the projectile 136 each about 0.25 inch, and the steel stress skin about 0.035 inch. Again, as in FIG. 1, the steel filter 116 has a hot melt layer 116*a* therewithin.

The end cylinders 138 and 140 are secured to the steel filter 116, as by welds 160 and 162, and the skin 142 is secured to said end cylinders by welds 144 and 145.

The continuous rod projectile 136 is of a length substantially less than the axial length of the high explosive charge 112, and is positioned centrally of said charge, the end cylinders 138 and 140 being employed to maintain it in position. The reason for so positioning the projectile is to minimize the effects on it of variations in explosive impulse occurring over the total warhead length, such variations being present because of what are referred to as end effects. Such variations, and the end effects causing them, will be better understood by reference to FIG. 5, which illustrates the detonation process of the warhead.

For purposes of clarification, only the annular charge 112, the detonation cap 124, and the steel filter 116 are shown in FIG. 5. High explosives such as are herein involved are initially detonated by the use of a separate detonator and booster arrangement, which sets up, or creates, a detonation wave in the explosive material. This detonation wave is a true wave, and will progress through the explosive charge at a very high velocity. Such a detonation wave is indicated at D in FIG. 5.

In the warhead a detonation wave will first be initiated at the center C of the detonation cap 124. This wave will expand outwardly until it reaches the interface between cap 124 and charge 112, at which point it will cause the initiation of detonation wave D, which will then propagate down the axial length of the annular charge. The path followed by the two detonation waves is generally indicated by the arrow P. In FIG. 5 the wave D has progressed about half-way down the length of the charge 12, the exploded portion of the warhead being shown in broken lines, and the undetonated material in solid lines.

As the detonation wave front moves through the high explosive material, a tremendous pressure is created in a narrow zone immediately behind the front. This pressure is created almost instantaneously, and hence gives rise to an explosive impulse which reacts on any material surrounding the charge somewhat in the manner of a very rapidly applied impact load.

In an annular high explosive charge of substantial length, such as the charge 112, the value of the explosive impulse will vary over the length of the charge. The impulse will first rapidly increase in value as the detonation wave progresses from the end of the charge toward the middle thereof. After the detonation wave progresses a distance inwardly into the charge, the impulse value will stabilize to an extent, and will remain generally constant over a substantial length of the warhead. As the wave approaches the end of the charge, the impulse will experience a dropping off in value.

The effects of variations in the explosive impulse are indicated generally in schematic form in the graph of FIG. 5, wherein the velocities of different portions of the filter skin 116 at points along the length of the warhead are plotted against the warhead length. The velocity of the filter skin is dependent, of course, on the energy imparted to it by the explosive impulse, and will accordingly vary as the value of the impulse varies. As is illustrated by the graph, the velocity increases in the end area A of the warhead. It is then somewhat constant over the central portion B, and then drops in value in the end portion C.

If the continuous rod projectile were to be disposed so as to extend over the entire axial length of the charge 112 the explosive impulse would cause different portions of it to move at considerably different velocities, which in turn would cause the rods comprising the projectile to bend, and to tumble in an end-over-end manner, thereby possibly causing serious damage to the projectile. However, by positioning the projectile centrally of the charge, in the

region B, the end effects occurring in the regions A and C will not act thereon, and hence the possibility of damage resulting from varying explosive impulse values is greatly reduced. The specific dimensions of the regions A, B and C are, of course, dependent upon the dimension and material of the annular high explosive charge.

As has been stated, the explosive impulse emanating from the narrow zone immeditely behind the detonation wave front will react upon surrounding material somewhat in the manner of a rapidly applied impact load. Hence, when the force impinges upon the steel filter skin **116** it will cause a mechanical reaction in the material, resulting in the establishment of a very intense stress wave. The purpose of the steel filter layer **116**, and more particularly, the lead filter layer **134** is to filter and attenuate the most severe of these stress waves whereby they will not impinge upon the rods of the projectile **136**.

If the initial, very severe stress waves were to impinge upon the rods of the projectile **136** they would cause hardening and embrittlement of the material thereof, which in turn would affect the operation of the projectile by causing premature breakup of the continuous ring. The filter layers will not pass the peaks of these initial severe stress waves, and hence they prevent such waves from impinging upon the projectile **136**, thereby eliminating any adverse effects they might have had on the rods thereof.

The stress waves that are produced by the explosive impulse proceed outwardly through the war-head components in the manner of a true wave. They first traverse the steel filter **116** and the lead filter layer **134**. The wave components that are not filtered out or attenuated by these filter layers then proceed onwardly through the rods of the projectile **135**, and the stress skin **142**. As the stress waves impinge upon each of these components they impart energy thereto, which energy causes the components to expand outwardly, resulting in controlled expansion of the rod ring and controlled break-up of the other warhead parts. In this process, the rods of the projectile **136** will acquire a velocity greater than that of the filter layers **116** and **134**, and the light, thin stress skin **142** will acquire a velocity greater than that of said rods.

As the stress waves cross from one component to the next they will be somewhat reflected at the boundary lines between the components, as is the behavior of a true wave. In the case of the boundary between the two filter layers, between the rods of the projectile and the filter layer **134**, and between the stress skin **142** and the rods of the projectile, such reflection of the stress waves will be only partial, as all of these materials are of similar, large densities. However, there will be an almost total reflection of the stress waves at the boundary between the stress skin **142** and the foam **154**, the density of the foam being about 8 or 9 lbs./ft.^{3}, as compared to a density of the order of 485 lbs./ft.^{3} for the steel of the stress skin.

The stress skin **142**, as a result of the effects thereon of the stress waves, will, as above stated, acquire a velocity substantially greater than the projectile **136**. It will break up and expand outwardly, compressing the light foam material **154**. This foam material in turn acquires energy and a high velocity, and expands outwardly. Energy is imparted to the foam partly by the action thereof of the stress skin **142**, which energy is thus an indirect result of the explosive impulse.

The foam also receives energy from the effects thereon of the explosive gases resulting from the detonation of the high explosive material. These gases flow outwardly at velocities of the order of 25,000 feet per second through the spaces existing between the warhead components after they have been accelerated by the stress waves resulting from the explosive impulse and have begun to move apart. The foam material, having a small mass, is very quickly accelerated by the combined effects of the energy imparted to it by the stress skin **142** and the explosive gases, and acquires a very high velocity.

The foam layer acts upon the innerbody skin and the surrounding missile structure, causing it to break up. The energy imparted to this fragmented structure causes the fragments to move outwardly at a velocity greater than that of the rods of the expanding projectile **136**. Thus, the projectile **136** is allowed to expand outwardly without ever coming into collision contact with the stress skin **142**, the foam **154**, skin **156**, and the surrounding missile structure.

As each element moves outwardly a shock wave forms in front of it. These shock waves meet and impinge upon the next outward element, and will be partly reflected and will partly give energy to the outer element. A complex system of shock waves will thus be generated between the various elements. By proper selection of the dimensions and masses of the components, advantage can be taken of the physical process of gas-shock wave flow so as to prevent impact damage to the rods from occurring.

The explosion of the warhead is shown diagrammatically in FIG. 6, wherein is shown a sector of the cross-section of the exploding warhead as it would appear just after the surrounding missile structure had been fragmented. The filter layers **116** and **134** are shown as being fragmented into pieces corresponding roughly to the size of the rods comprising the expanding projectile **136**. The stress skin **142**, the foam layer **154**, confining skin **156**, and the missile structure **104** are broken up into somewhat larger fragments. All of the components, including the two filter layers, the projectile **136**, the stress skin **142**, the foam **154**, skin **156**, and the missile structure **104**, are shown to be spaced from one another. Thus, as has been stated, the projectile **136** is free to expand into a continuous ring without coming into collision with any of the other components of the warhead or the missile.

The specific dimensions of the components of the warhead, and the materials and densities of those components, are matters of design that are dependent upon numerous factors, such as the size and material of the rods, the high explosive employed, the size and construction of the missile, and the point within the missile at which the warhead is positioned. By way of example, a typical high explosive for use with the steel rods of the warhead shown could be a combination of 75% TNT and 25% RDX.

As is evident from the above, an innerbody continuous rod warhead has been provided wherein the continuous rod projectile is propelled outwardly without being damaged by surrounding missile structure, and which projectile is preserved from the adverse effects of end effects and severe stress waves emanating from the high explosive charge.

Obviously, many modifications and variations of the present invention are possible in the light of the above teachings. It is therefore to be understood that within the scope of the appended claims the invention may be practiced otherwise than as specifically described.

What is claimed is:

1. In combination with a missile having a cylindrical forward body portion, and an innerbody member secured concentrically within said body portion in spaced relationship therewith and having an outer skin; a continuous rod warhead mounted within said innerbody, said warhead including a cylindrical charge of high explosive, a continuous rod projectile surrounding said charge, a stress skin closely surrounding said projectile, an annular layer of foam material closely surrounding said stress skin and filling the annular space between it and the outer skin of said innerbody, and means in one end of the cylindrical charge for causing detonation thereof.

2. The combination as recited in claim **1** wherein said projectile has an axial length substantially less than that of said charge and is disposed medially thereof.

3. The combination as recited in claim 2, including additionally means for securing said continuous rod projectile and said stress skin in position.

4. In combination with a missile having a cylindrical forward body portion, and an innerbody member secured concentrically within said body portion in spaced relationship therewith and having an outer skin; a continuous rod warhead mounted within said innerbody, said warhead including a cylindrical charge of high explosive positioned centrally of said innerbody, non-explosive filter means disposed closely about said charge, a continuous rod projectile closely surrounding said filter means and said charge, a stress skin closely surrounding said projectile, and an annular layer of foam material closely surrounding said stress skin and filling the space between it and the outer skin of said innerbody.

5. The combination as recited in claim 4, wherein said filter means includes concentrically disposed inner and outer layers of steel and lead, respectively, positioned in intimate contact with each other between said charge and said projectile.

6. In combination with a missile having a cylindrical forward body portion, and an innerbody member secured concentrically within said body portion in spaced relationship therewith and having an outer skin; a continuous rod warhead mounted within said innerbody, said warhead including a hollow cylindrical charge of high explosive positioned centrally of said innerbody, means disposed in one end of said charge for causing detonation thereof, non-explosive filter means disposed closely about said charge, a continuous rod projectile having an axial length substantially less than that of said charge, said projectile closely surrounding said filter means and being positioned medially of the length of the charge, a relatively thin stress skin surrounding and in intimate contact with said projectile, means for retaining said projectile and said stress skin in position about said charge, and an annular layer of foam material surrounding and in intimate contact with said stress skin and filling the space between it and the outer skin of said inner body.

7. The combination recited in claim 6 wherein said filter means includes concentrically disposed inner and outer layers of steel and lead, respectively, positioned in intimate contact with each other between said charge and said projectile, said steel layer extending the length of said charge and said lead layer extending the length of said projectile.

8. The combination as recited in claim 7, wherein said steel filter layer is lined with a relatively thin hot melt layer of plastic material, and wherein all spaces existing between the rod elements comprising the continuous rod projectile are filled with a plastic matrix material.

9. The combination as recited in claim 6, wherein said detonating means includes a disc of high explosive disposed within the aft end of said hollow cylindrical charge.

10. An innerbody continuous rod warhead for a missile, including a cylindrical charge of high explosive, non-explosive filter means disposed about said charge, a continuous rod projectile disposed about said filter means and said charge, whereby upon detonation of said charge said filter means will filter and attenuate the most severe of the stress waves created by the exploding charge to prevent them from acting adversely upon the continuous rod projectile, said filter means including a layer of steel disposed about said charge, and a layer of lead disposed about said layer of steel and between said layer of steel and said projectile.

11. In an innerbody continuous rod warhead for a missile, a cylindrical charge of high explosive, non-explosive filter means disposed about said charge, a continuous rod projectile having an axial length substantially less than that of said charge, said projectile being disposed about said filter means and said charge and being positioned medially of the length of the latter, means for retaining said projectile in position, whereby upon detonation of said charge undesirable action upon the projectile resulting from end effects occurring at the opposite ends of the charge will be minimized, the most severe stress waves created by the explosion of said charge being filtered and attenuated by said filter means to prevent their acting adversely upon the projectile, said filter means including concentrically disposed inner and outer layers of steel and lead, respectively, positioned between said charge and said projectile, and means positioned at one end of said charge for causing detonation of the same.

References Cited by the Examiner

UNITED STATES PATENTS

622,994	4/1899	Chambers	102—59
1,297,873	3/1919	Laurie	102—67 X
1,306,215	6/1919	Cushing	102—67 X
2,972,950	2/1961	Welanetz	102—68

FOREIGN PATENTS

10,980	1884	Great Britain.

BENJAMIN A. BORCHELT, *Primary Examiner.*

ARTHUR M. HORTON, *Examiner.*

W. E. STEWART, F. C. MATTERN, *Assistant Examiners.*