June 3, 1941. A. N. GOLDSMITH 2,244,251

TELEVISION CONTROL DEVICE

Filed April 28, 1938 2 Sheets-Sheet 1

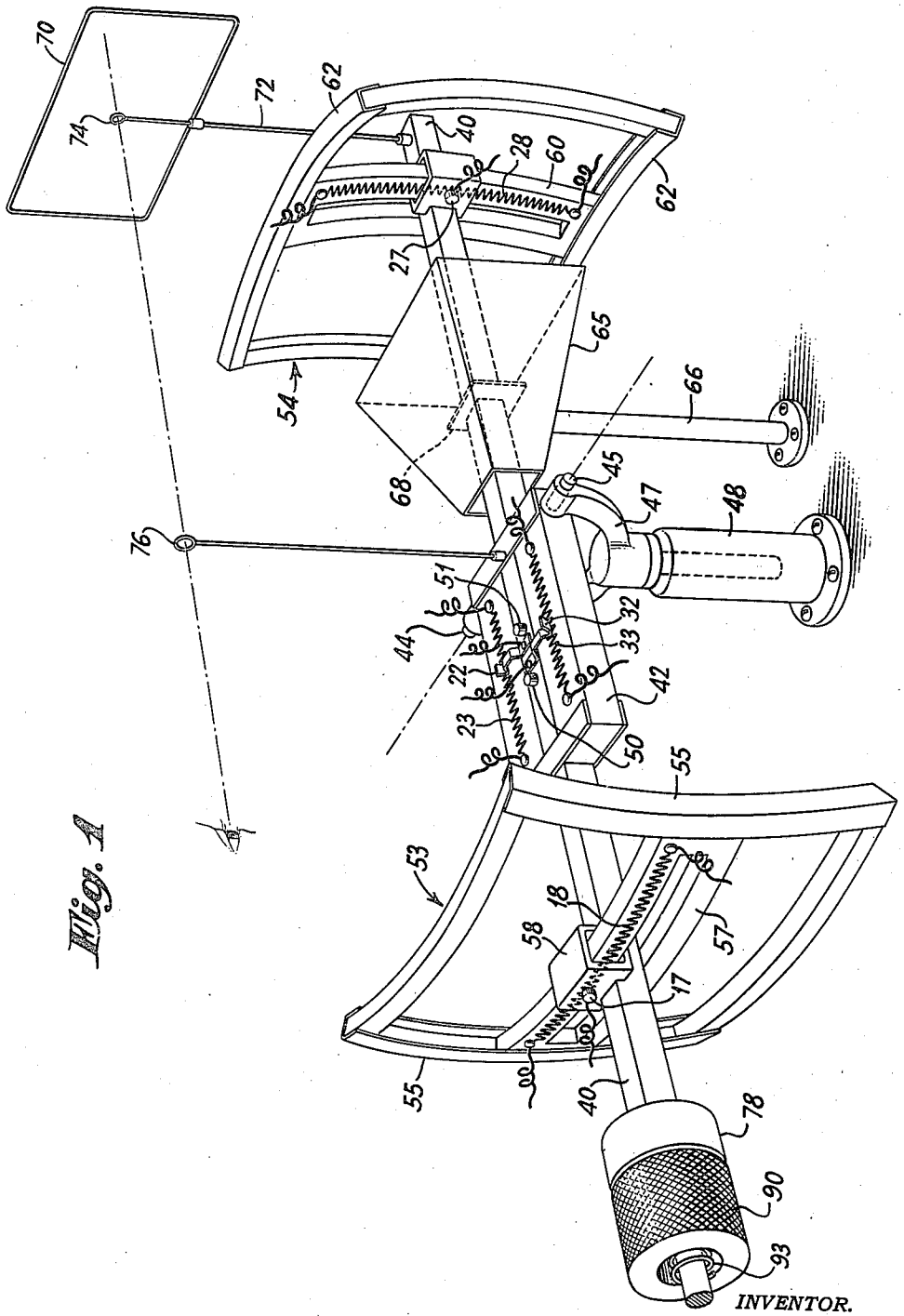

Fig. 1

INVENTOR.
ALFRED N. GOLDSMITH

BY H. S. Grover

ATTORNEY.

June 3, 1941. A. N. GOLDSMITH 2,244,251

TELEVISION CONTROL DEVICE

Filed April 28, 1938 2 Sheets-Sheet 2

Fig. 2

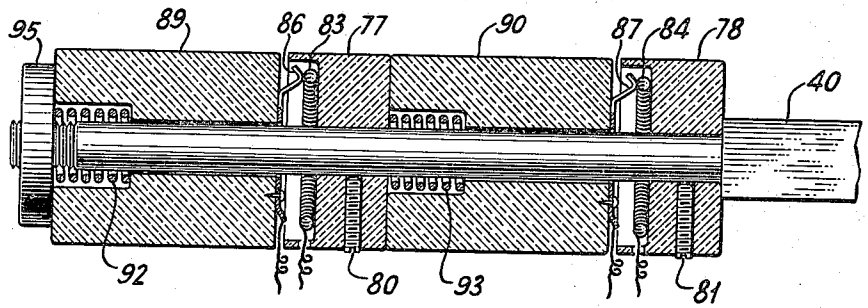

Fig. 3

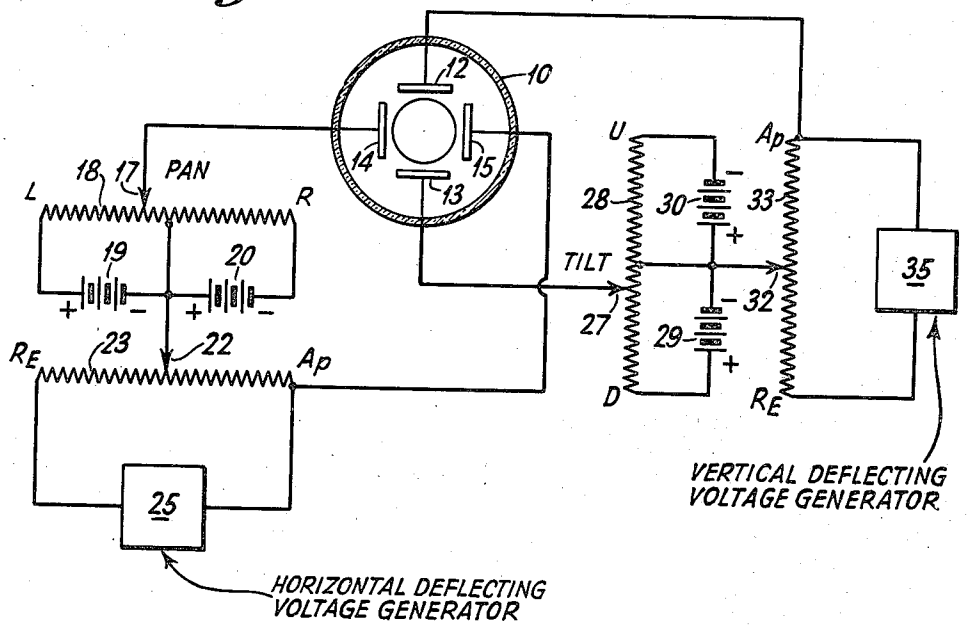

INVENTOR.
ALFRED N. GOLDSMITH

BY H. S. Sawyer

ATTORNEY.

Patented June 3, 1941 2,244,251

UNITED STATES PATENT OFFICE

2,244,251

TELEVISION CONTROL DEVICE

Alfred N. Goldsmith, New York, N. Y., assignor to Radio Corporation of America, New York, N. Y., a corporation of Delaware

Application April 28, 1938, Serial No. 204,876

9 Claims. (Cl. 178—7.2)

This invention relates to an improved method of and means for operating a television camera wherein the controls for such operation are conveniently operated from a single member which is movable in three separate and distinct planes.

More specifically, the present invention relates to an apparatus wherein the effect of an approach of the television camera to the subject, or the effect of a tilting or panning of the camera or any combination of these may be simulated without actually physically moving the camera per se. This is accomplished by controlling the size of the area of the photo-sensitive mosaic which is scanned by the cathode ray beam together with the particular location (on the entire mosaic surface) of the specific area scanned at the particular instance.

In a television studio the arrangement of the set and the lighting therefor may be such that a camera cannot be moved to all physical positions from which it is desirable to transmit a view. Furthermore, the movement of a television camera entails some degree of attention on the part of the operator or even the presence of an additional operator and if it were possible to permit the camera to remain stationary and at the same time produce an effect which is similar to bringing the camera nearer the subject to be televised or turning the camera from one side to another or tilting the camera, the disadvantages of moving the camera bodily would be overcome and the operation of the camera would be materially simplified inasmuch as the attention of the operator can be entirely directed to following the particular subject or artist by means of a relatively light and dirigible member in comparison to the inconvenience and trouble of moving an entire camera.

This invention has, therefore, for one of its purposes the provision of means whereby different areas of the television studio set may be televised at will without actually moving the television camera.

A further purpose of the present invention resides in the provision of means whereby the effect of an approach of the television camera toward the subject to be televised, or a receding therefrom, may be simulated without actually moving the camera or without changing in any way the lenses associated with the camera.

A still further purpose of the present invention resides in the provision of means whereby the operation of moving the television camera in a horizontal plane about a vertical axis such as a panning operation may be brought about by purely electrical means without actually moving the camera per se.

Still another purpose of the present invention resides in the provision of means whereby the effect of tilting the camera about a horizontal axis may be simulated by moving a relatively light control member associated with the camera without actually moving the comparatively large and heavy camera itself.

Still another purpose of the present invention resides in the provision of means whereby in addition to the controlling of the panning action, the tilting action and the approach or receding action of the camera from a single control member, other means are provided whereby the intensity of the scanning cathode ray beam or the focus thereof or both may be controlled by still another manipulation (such as rotation) of the same control member.

Still another purpose of the present invention resides in the provision of means whereby the particular area being scanned, as well as the size of the area, may be ascertained by a view-finder, so positioned that the operator of the camera may at all times know what portion of the television studio set is being scanned and transmitted at the particular instance.

Another purpose of the present invention resides in the provision of a unitary control for a television camera which is simple in operation and which follows the natural impulses of the operator insofar as such control of the area televised is concerned.

Still other purposes and advantages of the present invention will become more apparent to those skilled in the art from a reading of the following specification and claims, particularly in connection with the drawings, wherein like parts are represented by like reference characters, and wherein:

Figure 1 represents one embodiment for accomplishing the purposes of the invention as set forth above,

Figure 2 shows a detailed section of a portion of the control element for the device shown in Figure 1, and

Figure 3 shows a schematic diagram of the electrical connections which may be used in applying the control device to a television transmitting tube or "iconoscope."

The invention will now be described with respect to the electric circuit and the manner in which the television transmitting tube is controlled and affected thereby in accordance with the present invention. The television transmit-

ting tube is not shown in detail since this is not believed to be necessary and further since the specific construction of the television transmitting tube is immaterial insofar as the present invention is concerned. The transmitting tube may, for example, be of the form shown and described by V. K. Zworykin in the Journal of the Institute of Electrical Engineers (British) vol. 75, number 442 for October, 1933, on page 440 et seq., as well as the Proceedings of the Institute of Radio Engineers for January, 1934, and further illustrated by his Patent #2,021,907, assigned to Radio Corporation of America or the pending application of V. K. Zworykin Serial No. 732,750 (RCV D-3780). The television transmitting tube is shown in section at 10 and the means for deflecting the cathode ray beam which is developed by an appropriate gun structure within the tube are shown within that portion of the television transmitting tube which is shown in the figure. This means includes a pair of deflecting plates 12 and 13 for the purpose of deflecting the cathode ray beam in a vertical direction and an additional pair of deflecting plates 14 and 15, placed at right angles to the first pair of plates, for the purpose of deflecting the cathode ray beam in a horizontal direction. Ordinarily these plates are supplied with a voltage variation of saw-tooth wave form in order that the deflection in the scanning direction will occupy a material proportion of the entire time for a complete deflection cycle. The means for supplying the voltage variations for deflecting the cathode ray beam in a horizontal direction is shown schematically at 25 which may represent any convenient and appropriate source of horizontal deflecting voltage. Connected across the source of horizontal deflecting voltage is a resistance or potentiometer 23 associated with which is a slider or adjustable contact 22. This adjustable contact is connected to the midpoint of another resistance 18 with which is associated an adjustable or sliding contact 17. The sliding contact 17 is connected to the horizontal deflecting plate 14 while one end of the resistance 23 is connected to the other horizontal deflecting plate 15. Connected from the mid-point of resistance 18 to the end thereof marked L on the drawings is a source of potential 19 while another source of potential 20 is connected between the midpoint of the resistance 18 and the other end of the resistance which is marked R. For the purpose of explaining the operation of the system, and for proper operation thereof, these sources of current may be poled as shown by the drawings.

A similar electrical circuit is associated with the vertical deflecting plates and includes a source of voltage 35 for deflecting the cathode ray beam in a vertical direction. Across the vertical deflecting voltage source is connected a resistance 33 which may operate as a potentiometer and associated with which is an adjustable contact or slider 32. This slider is connected to the midpoint of another resistance 28 with which is associated an adjustable contact 27. The contact 27 is connected to the vertical deflecting plate 13 and one end of the resistance 33 is connected to the other vertical deflecting plate 12. Sources of potential 29 and 30 are provided for biasing the potentials of the vertical deflecting plates and these voltage sources are connected to the resistance 28 in a manner similar to the manner in which the sources of voltage 19 and 20 are connected to the resistance 18 as explained above.

In explaining the operation of Figure 3 it will be assumed that the sliders 17 and 27 are positioned midway along the resistances 18 and 28 respectively, so that neither the horizontal nor vertical deflecting plates will be biased by the presence of the sources of voltage 19, 20, 29 and 30. The horizontal deflecting voltage as supplied by the source 25, will then be effective to cause horizontal deflection of the cathode ray beam by reason of the fact that this voltage is applied to the deflecting plates 14 and 15. The amount of voltage applied to these plates or the amplitude of the deflecting voltages applied thereto may be controlled by adjusting the position of the slide contact 22 with respect to the resistance 23. When the contact 22 is moved toward the end marked *Ap* the amplitude of the deflecting voltages as applied to the deflecting plates will be decreased with the result that the horizontal deflection amplitude will be correspondingly decreased. If, however, the slide contact 22 is moved toward the end of the resistance 23 which is marked *Re*, the amplitude of the voltage applied to the deflecting plates will be increased resulting in an increase in the horizontal deflection of the cathode ray beam. Similarly as the slidable contact 32 is moved along the resistance 33 the amplitude of the vertical deflection of the cathode ray beam may also be controlled.

If the slidable contacts 22 and 32 are connected together in such a way that they are moved proportionate amounts, then both the vertical and horizontal deflection of the cathode ray beam may be controlled simultaneously and proportionately so that by moving each of the sliders to the end of their associated resistances marked *Ap*, the area scanned on the photosensitive mosaic of the television transmitting tube may be reduced proportionately. Since the size of the image as reproduced in a television receiver remains substantially constant, a movement of the sliders 22 and 32 in the direction assumed will simulate the effect of moving the television camera toward the subject, since a smaller area of the photo-sensitive mosaic within the television tube and a correspondingly smaller area of the image focused thereon will be scanned by the television camera. If, however, the sliders are moved in the opposite direction an effect may be produced on the television receiving set corresponding to a receding action of the television transmitting camera. It may be seen, therefore, that the effect of moving the camera to or from the subject may be brought about without actually physically moving the camera by merely adjusting the positions of the slidable contacts 22 and 32 upon their associated resistances 23 and 33. It is to be understood that a sharply defined image capable of enduring enlargement without noticeable loss of definition is focused on the iconoscope mosaic. Also that the granular structure of the mosaic is fine, and that the size of the scanning spot in the iconoscope is of suitably limited dimensions.

In further describing the operation of the figure it will be assumed that a reduced area of the photo-sensitive mosaic of the television transmitting camera is being scanned, and that it is desired to effect a panning of the television camera without actually moving the same. To accomplish this, the sliding contact 17 is moved along the resistance 18 toward the end thereof marked L, for instance. When this is done a

biasing potential will be applied to the horizontal deflecting plates 14 and 15 in such a manner that deflecting plate 14 will be maintained slightly more positive than the plate 15. This results in producing a predetermined horizontal bias deflection of the cathode ray beam upon which is superimposed the horizontal deflecting voltage produced by the generator 25. Accordingly, the reduced area which is being scanned on the photosensitive mosaic remains constant in size but is shifted to the left corresponding to moving the television camera in such a direction. If it is desired to simulate the effect of panning the camera to the right then the sliding contact 17 is moved in the opposite direction, i. e., toward the end of the resistance 18 marked R, which brings about a result directly opposite to that described with respect to moving the contact toward the end of the resistance marked L.

If it is desired to cause a scanning of a reduced area above or below the center of the photo-sensitive mosaic, then the sliding contact 27 may be moved up or down along the resistance 28, which results in applying a biasing potential to the deflecting plates 12 and 13 in a manner similar to that described above in connection with the biasing of plates 14 and 15 when a panning operation is simulated.

The slidable contacts 17 and 27 are independently controllable in order that the effects of panning the camera or tilting the camera may be controlled independently in accordance with the desires of the operator of the television transmitting camera.

One convenient means for jointly yet independently controlling the size of the area scanned on the photo-sensitive mosaic as well as the position of such area is shown in Figure 1. In this figure is shown more or less schematically an apparatus in which the resistances shown in Figure 3 may be varied to control the operation of the television transmitting tube in the manner set forth above. The various resistances shown in Figure 3 which operate to control the television transmitting tube as described are shown in Figure 1 and bear the same reference numerals. For controlling the resistances, a single control shaft 40 is provided, the shaft being mounted for slidable movement within a rectangular structure 42. This structure is provided with trunnions 44 and 45 which are supported by bearing surfaces in a yoke structure 47. The yoke structure is positioned for rotational movement within a support member 48 so that the control shaft may be moved in a horizontal plane because of the possibility of relative movement between the yoke member 47 and the support 48, and also the control shaft 40 may be moved in a vertical plane because of the trunnion mounting. The rectangular structure 42 carries the resistances 23 and 33, and for cooperating with the resistances are the two movable contact members 22 and 32 respectively. These contact members are permanently secured to the control shaft 40 so that when the control shaft is moved in the direction of its axis, the position of the adjustable contacts 22 and 32 on the resistances 23 and 33 may be varied. In order to limit the movement of the control shaft in an axial direction, a pair of stops 50 and 51 are provided. These stops are secured to the control shaft 40 and limit axial movement of the shaft by engagement with the end portions of the rectangular structure 42. Moving the control rod in the direction of its axis then, by reason of varying the positions of the contacts 22 and 32 on the resistances 23 and 33 as explained above, controls the area of the photosensitive mosaic that is scanned by the cathode ray beam in the television transmitting tube.

For supporting the resistances 18 and 28 a pair of frame members 53 and 54 are provided. These frame members are shaped to conform with the surface of a sphere the center of which is preferably located approximately at a point midway between the trunnions 44 and 45. The frame member 53 includes a pair of guides 55 which are U-shaped in cross-section, and positioned within these guides is a structure 57 upon which is positioned the resistance 18. Cooperating with this resistance is a movable contact 17 which is supported by a member 58, the member 58 being slidable with respect to the member 57 so that the position of the contact 17 with respect to the contact 18 may be adjusted. The element 58 is also so constructed to overlap the edges of the control shaft 40 so that upon horizontal movement of the control shaft 40 the position of the contact 17 with respect to the resistor 18 may be controlled, yet the control shaft 40 may be moved in the direction of its axis without disturbing the position of the element 58 or the contact 17 with respect to the resistance 18. Furthermore, because of the fact that the element 57 is positioned within the U-shaped guides 55, the control shaft 40 may also be moved vertically without disturbing the setting of the contact 17 with respect to the resistance 18.

A similar structure is provided within the supporting frame 54 whereby the contact 27 with respect to the resistance 28 may be controlled, the resistance 28 being supported upon a member 60, which member is capable of horizontal movement within the guides 62. Movement of the control shaft 40 in a vertical plane determines the position of the contact 27 with respect to the resistance 28 whereas horizontal movement of the control shaft or a movement of the shaft along the axis thereof does not disturb the setting of the contact 27 with respect to the resistance 28.

In order to limit the movement of the control shaft 40 in vertical or horizontal planes in accordance with the position of the control shaft along the direction of its axis, a movement limiting member 65 is provided. This member is supported by a support rod 66 and is held stationary with respect to the control shaft 40. Positioned upon the control shaft 40 and movable therewith is a small rectangular member 68. The movement limiting member 65 is shaped in the form of a truncated pyramid, and the size of the guide 68 is such that when the control shaft 40 is moved to the limit determined by the stop 50, no horizontal or vertical movement of the control shaft will be possible. However, when the control shaft 40 is moved in the direction of its axis to the limit determined by the stop 51, or any position intermediate thereof, varying degrees of horizontal and vertical movement of the control shaft is made possible.

The reason for so limiting the horizontal and vertical movements of the control shaft in accordance with its axial position is because of the fact that when the control shaft is entirely retracted so that the cathode ray beam scans substantially the entire photo-sensitive mosaic, no horizontal or vertical shifting of the scanned area should be possible. When, however, the control shaft is moved axially so as to reduce the size of the area actually scanned on the pho-

to-sensitive mosaic (simulating an approach of the television camera), both horizontal and vertical shifting of the actual area scanned on the mosaic should be permitted. The amount of horizontal or vertical shifting of the area therefore depends upon the axial position of the control shaft 40 and the shape of the movement limiting member 65 is such that maximum horizontal or vertical shifting of the actual area scanned is possible when the size of the actual area scanned is a minimum. By providing the movement limiting member 65 and the guide 68, the possible horizontal or vertical movement of the control shaft may be regulated in accordance with the size of the area actually scanned on the photo-sensitive mosaic, so that the cathode ray beam will at no time scan beyond the confines of the mosaic electrode.

In order that the operator of the television transmitting camera may know the specific field or area being scanned by the cathode ray beam, a view finder is provided. The view finder comprises a frame member 70 which is attached to a support rod 72, the support rod being secured to the end of the control shaft 40. Centrally located within the frame member 17 is a centering aperture 74 for centering with the finder 76. The finder is secured to the rectangular structure 42 at a point preferably midway between the trunnions 44 and 45. The center of the field of view is therefore in alignment with the centering apertures 74 and 76, and the extent of the field of view is determined by the area covered by the frame member 70. As the control shaft is moved along its axis, or horizontally, or vertically, the frame member 70 is moved accordingly so that the operator may know the specific field that is being scanned at the particular instant.

When the horizontal and vertical deflecting potentials are so reduced that the actual scanned area of the photo-sensitive mosaic is reduced, it is sometimes advantageous to alter the degree of focus of the cathode ray beam. Furthermore, it is sometimes desirable to, at the same time, alter the intensity of the cathode ray beam and provisions are therefore made whereby these two operations may be brought about. In Figure 1 only a portion of the control handle which is attached to the control shaft 40 is shown, but a detailed sectional showing of the control handle is illustrated in Figure 2. The handle comprises a pair of stationary block members 77 and 78 which are secured to an extension of the control shaft 40 by means of set screws 80 and 81 respectively. Contained within a recess within the stationary members 77 and 78 are a pair of resistances 83 and 84. For cooperating with these resistances there are provided movable contact members 86 and 87, the contact members being secured to a pair of rotatively mounted members 89 and 90. When either of the rotatable members 89 or 90 are moved, the positions of the contacts 86 and 87 with respect to the resistors 83 and 84 may be controlled. Positive contact is maintained between the movable contacts and the resistors by reason of the compression springs 92 and 93. All of these elements are held in assembled relationship by means of the nut 95 which is in threaded engagement with the end of the control shaft 40.

In the operation of the system the unitary control device as illustrated in Figure 1 is preferably positioned relatively or closely adjacent the television camera, so as to minimize the effect of parallax. When the control handle which is attached to the control shaft 40 is moved toward the operator, that is, in the direction limited by the stop member 50, the values of the resistances 23 and 33 included in the circuit are such that the deflecting voltages applied to the deflecting elements of the television transmitting tube will produce maximum horizontal and vertical deflection of the cathode ray beam. In this case substantially the entire surface of the mosaic electrode will be scanned by the beam. Under these conditions the guide member 68 and its relation to the frustrum 65 is such that horizontal and vertical movement of the control shaft is impossible. If an approach effect is desired, the television camera may remain perfectly stationary and the control shaft 40 may be moved forwardly so that the horizontal and vertical deflections of the cathode ray beam will be decreased. The area actually scanned on the photo-sensitive mosaic will therefore be reduced and in view of the fact that the same picture size is continuously reproduced at the receiving station, an effect simulating an approach of the television camera toward the subject will result. Under these conditions if it is desired to scan a field which is either to the left or right, or above or below the particular field scanned, the control shaft 40 may then be moved horizontally or vertically to alter the position of the reduced area scanned on the photo-sensitive mosaic of the television transmitting tube. Also, if, under these conditions, it is desirable to alter either the focus or the intensity of the cathode ray beam, the rotatable control members 89 and 90 may then be utilized to effect such result.

From the above it may therefore be seen that a new and improved control means for a television transmitting camera has been developed, whereby the camera may remain relatively stationary with respect to the subject being televised, while at the same time effects simulating the approach of the television camera, or a panning, or tilting or any combination of these may be brought about by a simple adjustment and movement of the control shaft 40, together with concurrent and sometimes desirable controls of the scanning beam.

It is to be understood that although a more or less specific embodiment of the present invention is shown and described herein, various alterations and deviations from the disclosure may be made without departing from the spiirt and scope thereof, and it is desired that any and all such modifications be considered within the purview of the present invention except as limited by the hereinafter appended claims.

I claim:

1. A unitary control device for a cathode ray television transmitting tube, comprising means for varying the size of the area scanned on the mosaic of the tube, means for varying the horizontal position of the scanned area on the mosaic, and means for varying the vertical position of the scanned area on the mosaic, and a single manually movable member capable of movement in three mutually perpendicular directions for correlatively and individually controlling the size of the scanned area, the vertical position of the scanned area and the horizontal position of the scanned area by the corresponding direction of movement of said manually movable member.

2. A control device for a cathode ray television transmitting tube wherein a cathode ray beam is developed, means for deflecting the developed beam in two mutually perpendicular directions for scanning a photosensitive mosaic electrode,

means for simultaneously and proportionately controlling the amplitude of beam deflection in each of the mutually perpendicular directions to scan an area of variable size on the mosaic electrode without altering the rate of scanning, separate means for independently vertically and horizontally shifting the position of the scanned area, and a single manually movable member capable of movement in three mutually perpendicular directions for correlatively and individually controlling the size of the scanned area, the vertical position of the scanned area, and the horizontal position of the scanned area by the corresponding direction of movement of said manually movable member.

3. In a television transmitting system wherein a cathode ray television transmitting tube is used comprising means for developing a cathode ray beam, a radiant energy responsive mosaic electrode, means whereby the cathode ray beam may be deflected in two mutually perpendicular directions for scanning the mosaic electrode, means for simultaneously and proportionately controlling the amplitude of deflection in each of the mutually perpendicular directions to scan an area of variable size on the mosaic electrode, means for varying the horizontal position of the scanned area on the mosaic, means for varying the vertical position of the scanned area on the mosaic, and a unitary control device whereby the means for simultaneously controlling the amplitude of deflection of the cathode ray beam and the separate means for vertically and horizontally controlling the position of the scanned area may be controlled by the corresponding direction of movement of a single pivotably and slidably manually adjustable member capable of movement in three mutually perpendicular directions.

4. A unitary control device for a cathode ray television transmitting tube comprising a control shaft movable in three mutually perpendicular directions, said control shaft being also positioned for rotary movement, means whereby movement of the control shaft in one direction controls the size of the area scanned on the mosaic in the transmitting tube, means whereby movements of the control shaft in two other mutually perpendicular directions control the vertical and horizontal position of the scanned area on the mosaic, and means whereby the rotary movement of the control shaft varies the intensity of the cathode ray beam, the focus of the beam, or both.

5. A unitary control device for a cathode ray television transmitting tube comprising means within the tube for producing a cathode ray beam, a light sensitive mosaic electrode, means to deflect the cathode ray beam in two mutually perpendicular directions for scanning the mosaic electrode, means for simultaneously and proportionately varying the amplitude of deflection of the cathode ray beam in the mutually perpendicular directions to scan an area of variable size on the mosaic electrode, means for varying the horizontal position of the scanned area on the mosaic, means for varying the vertical position of the scanned area on the mosaic, means for varying the intensity of the produced cathode ray beam, and means for controlling the focus of the cathode ray beam, and a single pivotably and slidably manually adjustable member capable of movement in three mutually perpendicular directions for correlatively and individually controlling the means for varying the size of the scanned area, the means for varying the horizontal position of the scanned area, and the means for varying the vertical position of the scanned area, said single manually adjustable member also being capable of rotary movement for controlling the means for varying the intensity and focus of the cathode ray beam.

6. A unitary control device for a cathode ray television transmitting tube comprising means for varying the size of the area scanned on the mosaic of the tube, means for varying the horizontal position of the scanned area on the mosaic, means for varying the vertical position of the scanned area on the mosaic, a single manually movable member capable of movement in three mutually perpendicular directions for correlatively and individually controlling the size of the scanned area, the horizontal position of the scanned area, and the vertical position of the scanned area, by the corresponding direction of movement of said manually movable member, and means for limiting the movement of said single manually movable member in each of the vertical and horizontal directions in accordance with its position in the third mutually perpendicular direction.

7. In a television transmitting system wherein a cathode ray television transmitting tube is used comprising means for developing a cathode ray beam, a photosensitive mosaic electrode, means whereby a cathode ray beam may be deflected in two mutually perpendicular directions for scanning the mosaic electrode, means for simultaneously controlling the amplitude of deflection in each of the mutually perpendicular directions to scan an area of reduced size on the mosaic electrode, means for controlling the horizontal position of the reduced scanned area on the mosaic, means for controlling the vertical position of the reduced scanned area on the mosaic, a unitary control device whereby the means for simultaneously controlling the amplitude of deflection of the cathode ray beam and the means for vertically and horizontally controlling the position of the scanned area may be controlled by a single manually movable member capable of movement in three mutually perpendicular directions, and means whereby the degree of control of the vertical or horizontal position of the scanned area is determined by the position of the means for controlling the amplitude of deflection of the cathode ray beam.

8. A unitary control device for a cathode ray television transmitting tube comprising a control shaft movable in three mutually perpendicular directions, means whereby movement of the control shaft in one direction controls the size of the scanned area on the mosaic in the transmitting tube, means whereby movements of the control shaft in two other mutually perpendicular directions control the vertical and horizontal position of the scanned area on the mosaic respectively, and a view-finder associated with said control shaft whereby the location as well as the size of the area scanned may be determined.

9. A unitary control device for a cathode ray television transmitting tube comprising means within the tube for producing a cathode ray beam, a light sensitive mosaic electrode, means to deflect the cathode ray beam in two mutually perpendicular directions for scanning the mosaic electrode, means for simultaneously and proportionately varying the amplitude of deflection of the cathode ray beam in mutually perpendicular directions to scan an area of variable

size on the mosaic electrode, means to vary the horizontal position of the reduced scanned area on the mosaic, means to vary the vertical position of the reduced scanned area on the mosaic, and means for limiting the operation of said last two named means in accordance with the amplitude of deflection of the cathode ray beam whereby the area scanned by the cathode ray beam will always lie within the confines of the mosaic electrode.

ALFRED N. GOLDSMITH.