(No Model.)

R. T. PALMER, Jr. & F. W. MERCER.

CLAMP.

No. 591,421. Patented Oct. 12, 1897.

Fig. 1.

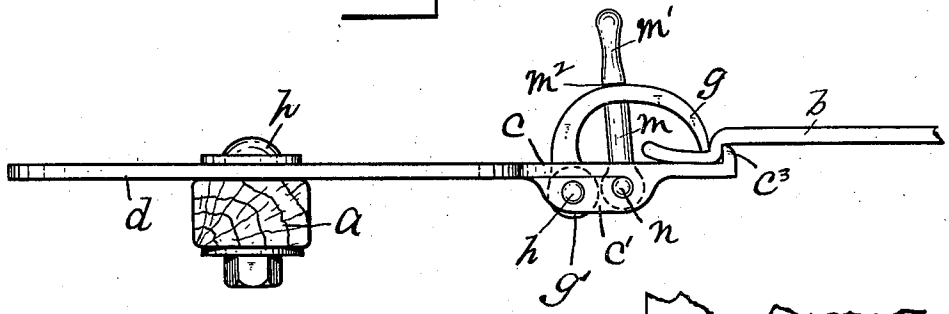

Fig. 2.

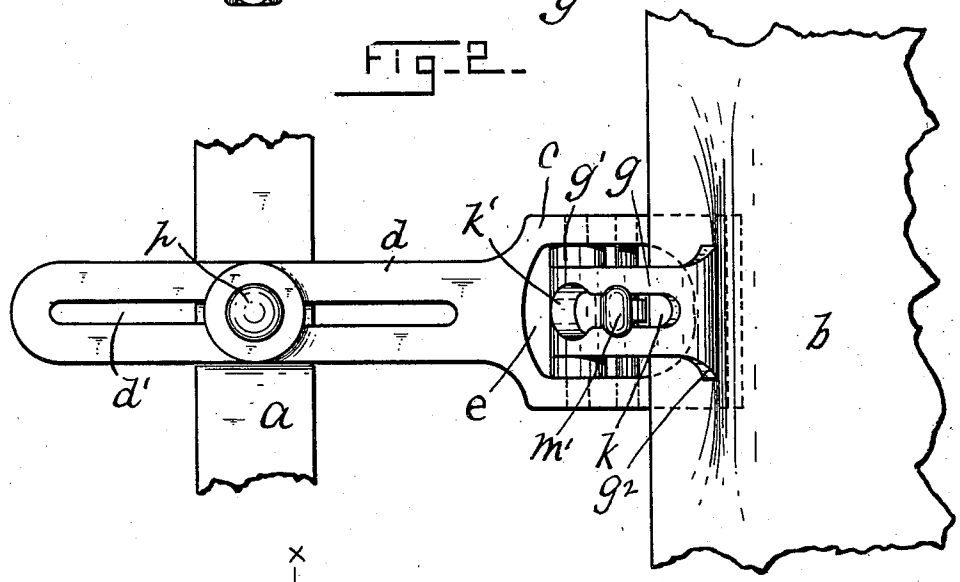

Fig. 3.

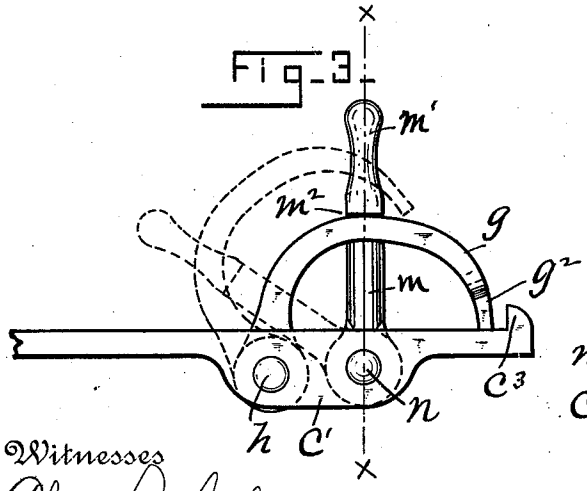

Fig. 4.

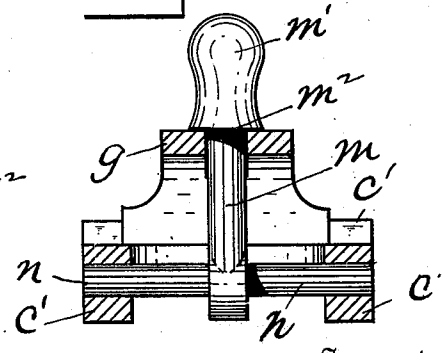

Witnesses
Alonzo M. Luther.
May F. Ritchie.

Inventors
Reuben T. Palmer Jr.,
Frederic W. Mercer,
By Attorneys
Frank H. Allen

THE NORRIS PETERS CO., PHOTO-LITHO., WASHINGTON, D. C.

UNITED STATES PATENT OFFICE.

REUBEN T. PALMER, JR., AND FREDERIC W. MERCER, OF NEW LONDON, CONNECTICUT.

CLAMP.

SPECIFICATION forming part of Letters Patent No. 591,421, dated October 12, 1897.

Application filed April 24, 1896. Serial No. 588,992. (No model.)

To all whom it may concern:

Be it known that we, REUBEN T. PALMER, Jr., and FREDERIC W. MERCER, citizens of the United States, and residents of the city and county of New London, State of Connecticut, have invented certain new and useful Improvements in Clamps, which improvements are fully set forth and described in the following specification, reference being had to the accompanying sheet of drawings.

Our invention is in appliances for clamping and supporting fabrics—as, for example, during the operation of stitching or quilting compound fabrics to produce bed-comfortables; and the immediate object of our invention is to provide a clamping device which may grasp and firmly hold the fabric near its edge and which may be quickly operated by hand either to grasp or release the said fabric. The complete clamp should also be light and should have no loose parts to become separated, mislaid, or lost.

To more readily explain our invention, we have provided the accompanying drawings, illustrating our device and showing the manner of its application.

In the drawings, Figure 1 is an elevation, and Fig. 2 a plan view, of our device. Fig. 3 shows, somewhat enlarged, a portion of Fig. 1; and Fig. 4 is a vertical sectional view of our device, taken on line x x of Fig. 3.

When our device is to be used in connection with apparatus for the manufacture of bed quilts or comfortables, as above mentioned, a frame is usually provided to which clamps of our improved form are secured at frequent intervals, said clamps serving to grasp the compound fabrics along its edges and support the same during the operation of quilting. The said rectangular frame, however, and the location of the clamps thereon relatively to each other, also the construction of the compound fabric, form no part of our present invention, and it is therefore deemed unnecessary to illustrate and describe the same in detail. A short section only of such frame and a small portion of the quilt are, however, shown.

Referring to the drawings, the letter a denotes the said short section of frame, and b the small portion of quilt.

Our clamping device consists of a body portion c, substantially rectangular in plan and having a shank d of considerable length. Through the body portion c is an opening e, within which is hinged a movable jaw g, said jaw being hung upon a pin h, passing across opening e and through a hub g', formed on said jaw, the said body portion c of our clamp being thickened somewhat, as at c', to provide substantial bearings for the ends of pin h. Jaw g is substantially semioval in shape and is of sufficient width to allow a slot k to be cut therein parallel to its length. Slot k receives the free end of an arm m, which latter passes therethrough and is hinged at one end within opening c upon a pin n, crossing said opening, the ends of said pin lying in the thickened portions c' of body portion c. The free end of arm m forms the operating-handle m' of our device, and beneath said portion m' the arm m is provided with shoulders m^2, so located as to engage and clamp upon the outer face of jaw g and hold the latter in its closed position, Fig. 3, when arm m is forced forward.

Near the hub end of jaw g the slot k therein is enlarged, as at k', sufficiently to permit the shouldered portions m^2 to pass therethrough when arm m is rocked into the position shown in dotted lines in Fig. 3, when jaw g may be swung open, as also shown in dotted lines in said figure.

To increase the binding-surface of jaw g, its free end is preferably made somewhat wider than the jaw proper, as at g^2, and to make our device still more effectual when in use the end of body portion c is preferably ribbed, as at c^3.

The shank d is slotted, as at d', to receive a bolt h, by means of which the clamp is adjustably secured to frame a.

When it is desired to use our device, jaw g is first opened, as shown in dotted lines, Fig. 3, the arm m having been previously rocked to permit of such opening, after which the edge of the fabric to be clamped is inserted between said jaw g and the body portion c^3. Said jaw is then closed upon the fabric and the arm m is rocked forward until its shoulders m^2 bind like a cam upon the outer face of the jaw g, thus preventing the opening of the

latter, which then clamps the fabric tightly between itself and the body portion c^3. The outer surface of the jaw at the rear wall of the opening k' is farther away from the pivotal point of the lever m than the surface at the front portion of the opening, so that when the lever m is swung backward to release the jaw the upper end or enlarged portion above the shoulder engages the rear end wall of the slot k, and then serves to swing the jaw g rearward on its pin h, thus lifting the free end of the jaw and releasing the fabric.

Having thus described our invention, we claim—

In a clamp, the combination, with a body, one end of which forms a jaw and the opposite end is provided with means for securing it in position, and the intermediate portion is provided with an opening, of two pins within the opening, one in front of the other, a semioval jaw pivotally secured upon the rear pin, the intermediate portion of which jaw is slotted longitudinally, and the rear end of the slot is enlarged, the upper surface of the jaw at the rear wall of the enlarged portion being farther away from the forward pin than the surface at the front wall of the enlargement, a lever pivotally secured upon the forward pin, the upper end of which projects through the jaw and is enlarged and forms a shoulder that engages with the portion of the jaw in front of the enlargement, but engages with the rear wall of the enlargement, whereby the jaw is closed when the lever is moved forward and opened when the lever is moved backward, substantially as set forth.

REUBEN T. PALMER, JR.
FREDERIC W. MERCER.

Witnesses:
FRANK H. ALLEN,
MAY F. RITCHIE.