Oct. 4, 1938. W. H. FRANK 2,131,800

CIRCUIT BREAKER

Filed Jan. 11, 1937 2 Sheets-Sheet 1

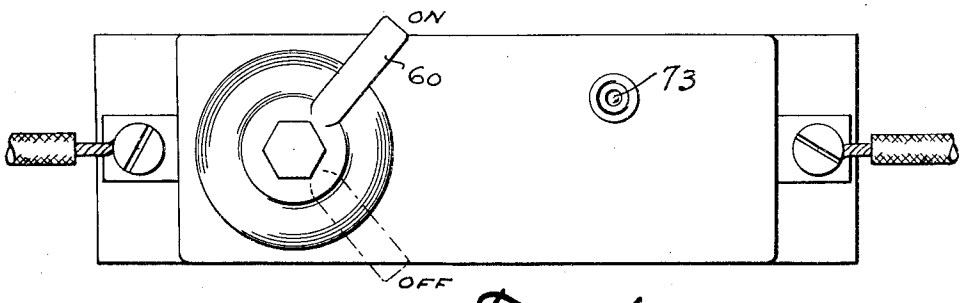


Fig. 1.

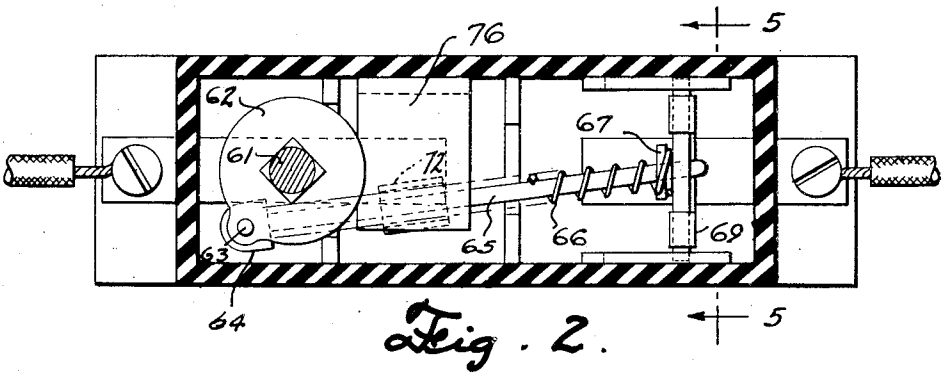


Fig. 2.

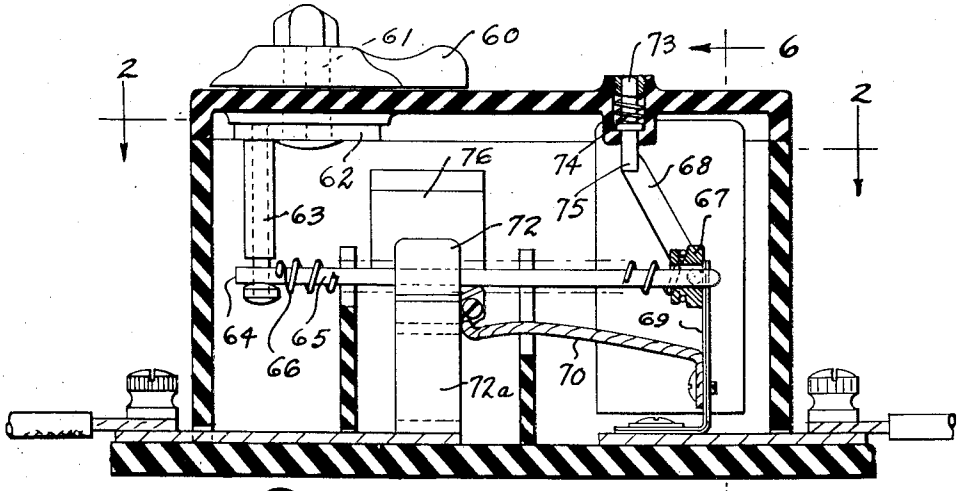


Fig. 3.

INVENTOR.
William H. Frank
BY
Daniel J. Cullen.
ATTORNEY.

Oct. 4, 1938. W. H. FRANK 2,131,800

CIRCUIT BREAKER

Filed Jan. 11, 1937 2 Sheets-Sheet 2

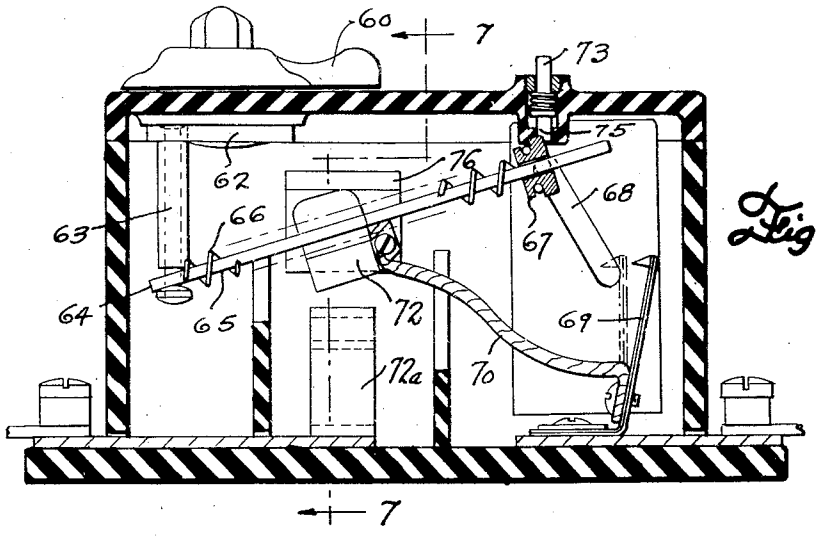


Fig. 4.

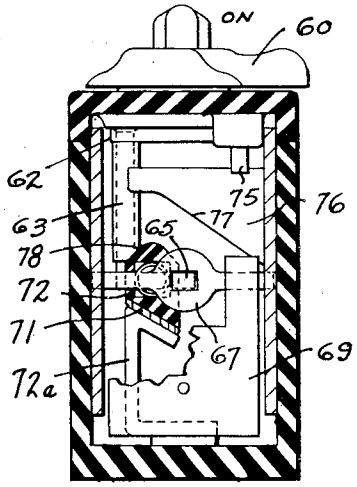


Fig. 5.

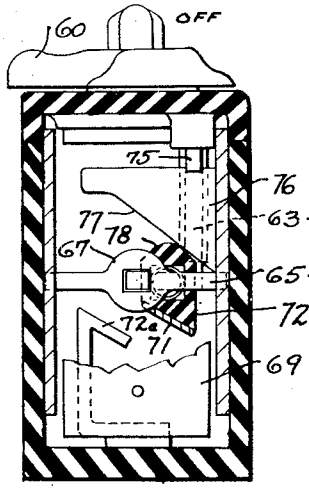


Fig. 6.

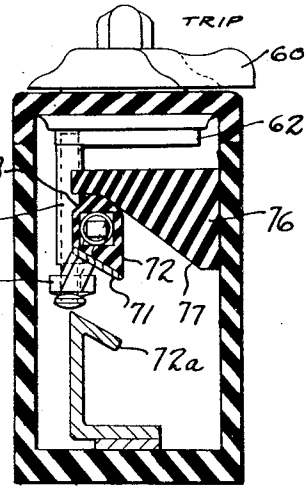


Fig. 7.

INVENTOR.
William H. Frank
BY Daniel G. Cullen.
ATTORNEY.

Patented Oct. 4, 1938

2,131,800

# UNITED STATES PATENT OFFICE

2,131,800

## CIRCUIT BREAKER

William H. Frank, Detroit, Mich.

Application January 11, 1937, Serial No. 119,931

10 Claims. (Cl. 200—116)

This application relates to circuit breakers.

The breaker herein disclosed and forming the invention hereof may best be understood upon reference to the drawings.

In these drawings:

Figs. 1–7 show a breaker wherein the spring means comprises a link mounted tension spring and is connected to the handle in such a way that the handle connection end of the spring means moves in a path transverse to the path traversed by the latch connection end of the spring means; and moves with no extraordinary radial movement away from the handle center of rotation;

Fig. 1 is a top plan view.

Fig. 2 is a plan section as if on line 2—2, Fig. 3.

Fig. 3 is an elevation section with the breaker in "on" position.

Fig. 4 is another view but with the breaker tripped.

Figs. 5, 6 and 7 are sections on lines 5—5, 6—6, and 7—7 of Figs. 2, 3, and 4 with the breaker in "on," "off" and "tripped" positions respectively.

The drawings show a breaker wherein the connection between the breaker handle and the breaker spring means is so designed that the movement of the handle connection end of the spring means is in a path generally transverse to that traversed by the latch connection end of the spring means; the spring means includes a link mounted tension spring and its handle connection end moves with no extraordinary radial movement away from the handle pivot.

A breaker handle 60 is shown as disposed on the breaker cover and is keyed to a shaft 61 which passes through the cover and is keyed to a crank plate 62 from which projects a crank pin 63 connected at 64 to one end of the breaker spring means which includes the link 65 surrounded by the coiled tension spring 66. The other end of the spring means is connected to a cross piece 67 arranged to have its ends ride in slots 68 of the breaker casing and arranged to be engaged and held down by the tips of the breaker overload release latch 69 which is connected by a flexible connection 70 to a movable contact 71 secured to an insulation block 72 which loosely surrounds the link 65 and spring 66, contact 72 mating with stationary contact 72a of the breaker.

In the cover is disposed an indicator button 73 normally held down by a spring 74 and adapted to be pushed up by engagement of the shank 75 of the button 73 by the cross piece 67 of the breaker on suitable occasions.

Carried by the side of the breaker casing is a resetting member or block 76 of insulation having a cam face 77 which may be engaged by a cooperating cam face 78 of the block 72 for purposes to be described.

Figs. 2, 3, and 5 show the breaker in "on" position with the spring stretched and with its cross piece end held by the latch 69 and with the parts held stationary by the influence of the spring and the engagement of the contacts 71—72a.

When the handle is moved from normal "on" position to "off" position, it rotates plate 62 clockwise (Fig. 2) from the position of Fig. 5 to the position of Fig. 6, first stretching the spring 66 and then permitting the stretched spring to relieve itself suddenly of part of its stretch for snap action, the spring 66 and the link 65 moving bodily about the latch held cross piece 67 as a pivot and across the axis of the center of rotation of the handle 60, namely shaft 61, to open the circuit, contact block 72 under such circumstances moving from the back towards the front of the breaker so that contact 71 leaves contact 72a as shown in Figs. 5 and 6. The spring 66 still under stretch holds the parts stationary in "off" position.

If the parts are in "on" position, Figs. 2, 3, and 5, and an overload arises to cause overload release of the latch 69, the latter warps to the right and the stretched spring 66 relieves itself of its soring stress suddenly, causing spring means 65—66 to rotate upwardly about the lower end of pin 63 as a pivot, with the cross piece 67 riding upwardly in the slot 68 (Fig. 4, Fig. 7) to lift block 72 and contact 71 off contact 72a and open the circuit. During such movement handle 60 will remain stationary; and cross piece 67 will force button 73 to move upwardly and indicate that overload release has occurred. The parts will come to rest with contact block 72 at the upper and left part of cam face 77 of resetting block 76 as shown in Fig. 7.

For resetting, handle 60 is rotated from the "tripped" or "on" position (Figs. 4 and 7) to the "off" position (Fig. 6). Such movement of the handle will cause contact block 72 to move to the right (Fig. 7) and this will result in causing the contact block to move downwardly as well as to the position of Fig. 6, and will also cause the latch connection end of the spring means 65—66, namely cross piece 67, to move downwardly and return under the tips of the latch 69 which had in the meantime cooled and returned to normal "on" position. Such resetting of the parts will return them to "off" position (Fig. 6) and will relieve

button 73 so that its spring 74 can return it to the untripped position (Fig. 3).

It will be observed that the handle connection end 64 of the spring means 65—66 moves in a horizontal path and that the latch connection end of the spring means 65—66 at cross piece 67 moves in a vertical path, on the device as shown in the drawings.

Now having described the devices herein shown, reference will be had to the claims which follow for a determination of the protection sought herein.

I claim:

1. In a circuit breaker controlling mechanism, an elongated spring means in the form of a coiled spring, a current responsive latch for holding the spring means under longitudinal stress in normal position, a rotatably mounted handle operatively connected to the spring means and manipulable by rotary movement out of its normal position to stress the spring means longitudinally and move it bodily out of its normal position and towards the center of rotation of the handle so that when the handle is released after such movement the spring means will tend to relieve itself of its longitudinal stress with a snap action, the relative arrangement of the parts being such that on such stress relieving movement of the spring means following such handle movement and subsequent release, the spring means will move bodily beyond the center of rotation of the handle and about the connection between the spring means and latch as a pivot, and also being such that on release of the latch, when the handle and spring means are in normal position, the spring means will tend to relieve itself of its stress with a snap action and in so doing will move bodily about its connection to the handle as a pivot, the handle and the spring means and the latch being so arranged relatively that the handle connection end of the spring means moves in a path generally transverse to that traversed by the latch connection end of the spring means.

2. In a circuit breaker controlling mechanism, an elongated spring means in the form of a coiled tension spring, a current responsive latch for holding the spring means under longitudinal stress in normal position, a rotatably mounted handle operatively connected to the spring means and manipulable by rotary movement out of its normal position to stress the spring means longitudinally and move it bodily out of its normal position and towards the center of rotation of the handle so that when the handle is released after such movement the spring means will tend to relieve itself of its longitudinal stress with a snap action, the relative arrangement of the parts being such that on such stress relieving movement of the spring means following such handle movement and subsequent release, the spring means will move bodily beyond the center of rotation of the handle and about the connection between the spring means and latch as a pivot, and also being such that on release of the latch, when the handle and spring means are in normal position, the spring means will tend to relieve itself of its stress with a snap action and in so doing will move bodily about its connection to the handle as a pivot, the handle and the spring means and the latch being so arranged relatively that the handle connection end of the spring means moves in a path generally transverse to that traversed by the latch connection end of the spring means.

3. In a circuit breaker controlling mechanism, an elongated spring means in the form of a coiled link mounted spring, a current responsive latch for holding the spring means under longitudinal stress in normal position, a rotatably mounted handle operatively connected to the spring means and manipulable by rotary movement out of its normal position to stress the spring means longitudinally and move it bodily out of its normal position and towards the center of rotation of the handle so that when the handle is released after such movement the spring means will tend to relieve itself of its longitudinal stress with a snap action, the relative arrangement of the parts being such that on such stress relieving movement of the spring means following such handle movement and subsequent release, the spring means will move bodily beyond the center of rotation of the handle and about the connection between the spring means and latch as a pivot, and also being such that on release of the latch, when the handle and spring means are in normal position, the spring means will tend to relieve itself of its stress with a snap action and in so doing will move bodily about its connection to the handle as a pivot, the handle and the spring means and the latch being so arranged relatively that the handle connection end of the spring means moves in a path generally transverse to that traversed by the latch connection end of the spring means.

4. In a circuit breaker controlling mechanism, an elongated spring means in the form of a coiled link mounted tension spring, a current responsive latch for holding the spring means under longitudinal stress in normal position, a rotatably mounted handle operatively connected to the spring means and manipulable by rotary movement out of its normal position to stress the spring means longitudinally and move it bodily out of its normal position and towards the center of rotation of the handle so that when the handle is released after such movement the spring means will tend to relieve itself of its longitudinal stress wih a snap action, the relative arrangement of the parts being such that on such stress relieving movement of the spring means following such handle movement and subsequent release, the spring means will move bodily beyond the center of rotation of the handle and about the connection between the spring means and latch as a pivot, and also being such that on release of the latch, when the handle and spring means are in normal position, the spring means will tend to relieve itself of its stress with a snap action and in so doing will move bodily about its connection to the handle as a pivot, the handle and the spring means and the latch being so arranged relatively that the handle connection end of the spring means moves in a path generally transverse to that traversed by the latch connection end of the spring means.

5. In a circuit breaker controlling mechanism, an elongated spring means in the form of a coiled spring, having a tendency to resist lengthwise stressing, a current responsive latch for holding the spring means in normal position and stressed under lengthwise stress, a rotatably mounted handle operatively connected to the spring means and manipulable by rotary movement out of its normal position to produce lengthwise stress in the spring means and to move it bodily out of its normal position and towards the center of rotation of the handle, the parts being so arranged relatively that when the handle is released after such movement the spring means will sud-

denly relieve itself of the stresses therein previously produced and will move itself bodily beyond the center of rotation of the handle and about the connection between the spring means and the latch as a pivot, the relative arrangement of the parts being such that when the latch is released at a time when the handle and spring means are in normal position the spring means will suddenly relieve itself of the stresses therein existing and will move itself bodily about the handle connection thereto as a pivot, the handle and the spring means and the latch being so arranged relatively that the handle connection end of the spring means moves in a path generally transverse to that traversed by the latch connection end of the spring means.

6. In a circuit breaker controlling mechanism, an elongated spring means in the form of a coiled tension spring, having a tendency to resist lengthwise stressing, a current responsive latch for holding the spring means in normal position and stressed under lengthwise stress, a rotatably mounted handle operatively connected to the spring means and manipulable by rotary movement out of its normal position to produce lengthwise stress in the spring means and to move it bodily out of its normal position and towards the center of rotation of the handle, the parts being so arranged relatively that when the handle is released after such movement the spring means will suddenly relieve itself of the stresses therein previously produced and will move itself bodily beyond the center of rotation of the handle and about the connection between the spring means and the latch as a pivot, the relative arrangement of the parts being such that when the latch is released at a time when the handle and spring means are in normal position the spring means will suddenly relieve itself of the stresses therein existing and will move itself bodily about the handle connection thereto as a pivot, the handle and the spring means and the latch being so arranged relatively that the handle connection end of the spring means moves in a path generally transverse to that traversed by the latch connection end of the spring means.

7. In a circuit breaker controlling mechanism, an elongated spring means in the form of a coiled link mounted spring, having a tendency to resist lengthwise stressing, a current responsive latch for holding the spring means in normal position and stressed under lengthwise stress, a rotatably mounted handle operatively connected to the spring means and manipulable by rotary movement out of its normal position to produce lengthwise stress in the spring means and to move it bodily out of its normal position and towards the center of rotation of the handle, the parts being so arranged relatively that when the handle is released after such movement the spring means will suddenly relieve itself of the stresses therein previously produced and will move itself bodily beyond the center of rotation of the handle and about the connection between the spring means and the latch as a pivot, the relative arrangement of the parts being such that when the latch is released at a time when the handle and spring means are in normal position the spring means will suddenly relieve itself of the stresses therein existing and will move itself bodily about the handle connection thereto as a pivot, the handle and the spring means and the latch being so arranged relatively that the handle connection end of the spring means moves in a path generally transverse to that traversed by the latch connection end of the spring means.

8. In a circuit breaker controlling mechanism, an elongated spring means in the form of a coiled link mounted tension spring, having a tendency to resist lengthwise stressing, a current responsive latch for holding the spring means in normal position and stressed under lengthwise stress, a rotatably mounted handle operatively connected to the spring means and manipulable by rotary movement out of its normal position to produce lengthwise stress in the spring means and to move it bodily out of its normal position and towards the center of rotation of the handle, the parts being so arranged relatively that when the handle is released after such movement the spring means will suddenly relieve itself of the stresses therein previously produced and will move itself bodily beyond the center of rotation of the handle and about the connection between the spring means and the latch as a pivot, the relative arrangement of the parts being such that when the latch is released at a time when the handle and spring means are in normal position the spring means will suddenly relieve itself of the stresses therein existing and will move itself bodily about the handle connection thereto as a pivot, the handle and the spring means and the latch being so arranged relatively that the handle connection end of the spring means moves in a path generally transverse to that traversed by the latch connection end of the spring means.

9. In a circuit breaker controlling mechanism, an elongated spring means, a current responsive latch for holding the spring means under longitudinal stress in normal position, a rotatably mounted handle operatively connected to the spring means and manipulable by rotary movement out of its normal position to stress the spring means longitudinally and move it bodily out of its normal position and towards the center of rotation of the handle so that when the handle is released after such movement the spring means will tend to relieve itself of its longitudinal stress with a snap action, the relative arrangement of the parts being such that on such stress relieving movement of the spring means following such handle movement and subsequent release, the spring means will move bodily beyond the center of rotation of the handle and about the connection between the spring means and latch as a pivot, and also being such that on release of the latch, when the handle and spring means are in normal position, the spring means will tend to relieve itself of its stress with a snap action and in so doing will move bodily about its connection to the handle as a pivot, the handle and the spring means and the latch being so arranged relatively that the handle connection end of the spring means moves in a path generally transverse to that traversed by the latch connection end of the spring means.

10. In a circuit breaker controlling mechanism, an elongated spring means having a tendency to resist lengthwise stressing, a current responsive latch for holding the spring means in normal position and stressed under lengthwise stress, a rotatably mounted handle operatively connected to the spring means and manipulable by rotary movement out of its normal position to produce lengthwise stress in the spring means and to move it bodily out of its normal position and towards the center of rotation of the handle, the parts being so arranged relatively that when the handle is released after such movement the spring means

