United States Patent [19]

Hagedorn

[11] **3,782,071**

[45] **Jan. 1, 1974**

[54] **SIMULTANEOUS CARTON FORMER AND LOADER**

[76] Inventor: **Hans Hagedorn,** 947 Huntington Cres., North Vancouver, British Columbia, Canada

[22] Filed: **June 1, 1971**

[21] Appl. No.: **148,540**

[52] **U.S. Cl.**..... **53/191,** 53/152, 53/207, 53/230

[51] **Int. Cl.**.. **B65b 41/06,** B65b 43/10, B65b 47/06

[58] **Field of Search**..... 53/29, 183, 192, 53/194–196, 207–209, 222, 223, 191; 93/51 R

[56] **References Cited**

UNITED STATES PATENTS

3,030,868	4/1962	Flack	93/51 R
3,492,923	2/1970	Stenberg	53/209 X
3,531,914	10/1970	Franklin	53/230
3,354,600	11/1967	Hoffmann	53/223
3,478,487	11/1969	Smith et al	53/186 X
3,482,372	12/1969	Hottendorf	53/32

Primary Examiner—Donald G. Kelly
Assistant Examiner—Neil Abrams
Attorney—Fetherstonhaugh & Co.

[57] **ABSTRACT**

Apparatus for directing a single or double tier load of containers onto a flat carton blank, folding the blank around the load, and securing end flaps in position to complete the loading and forming of the carton. A blank is partly formed as it is drawn into position to receive the load, and after the load has been received, the forming operation continues with the various elements of the carton being secured in position during this operation.

26 Claims, 14 Drawing Figures

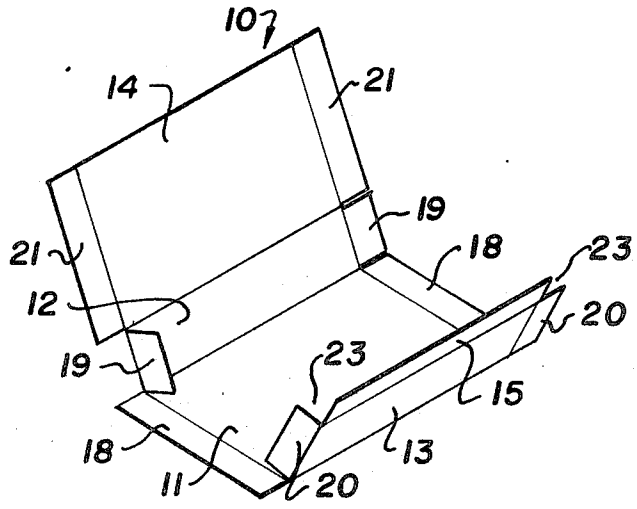

PATENTED JAN 1 1974

3,782,071

SHEET 1 OF 8

Fig. 1.

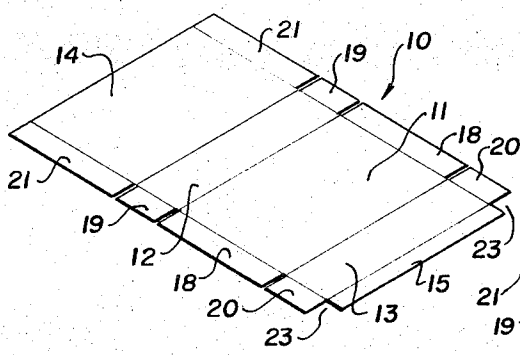

Fig. 3.

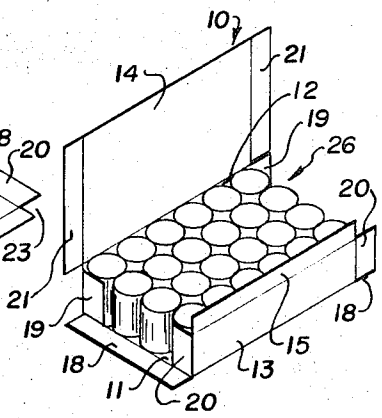

Fig. 2.

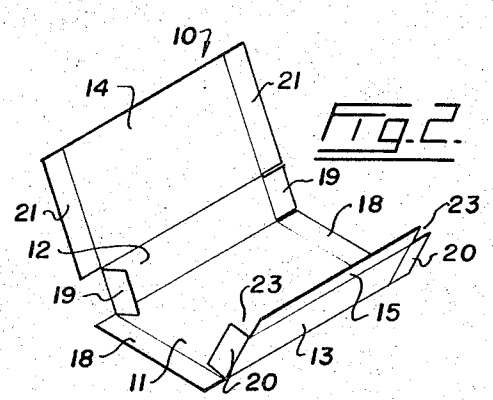

Fig. 4.

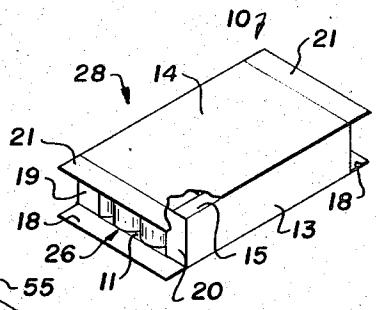

Fig. 8.

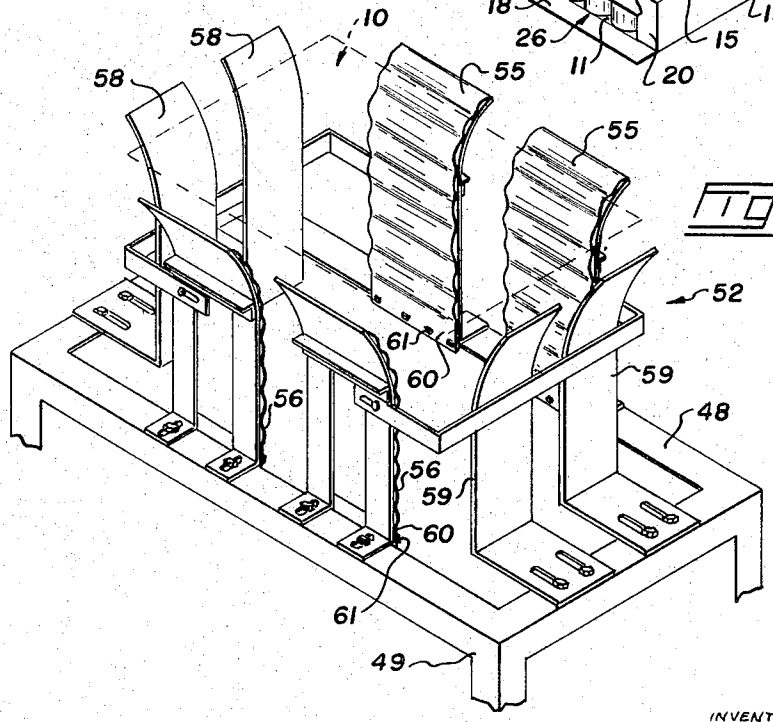

INVENTOR
HANS HAGEDORN
BY
Fetherstonhaugh & Co.
ATTORNEYS

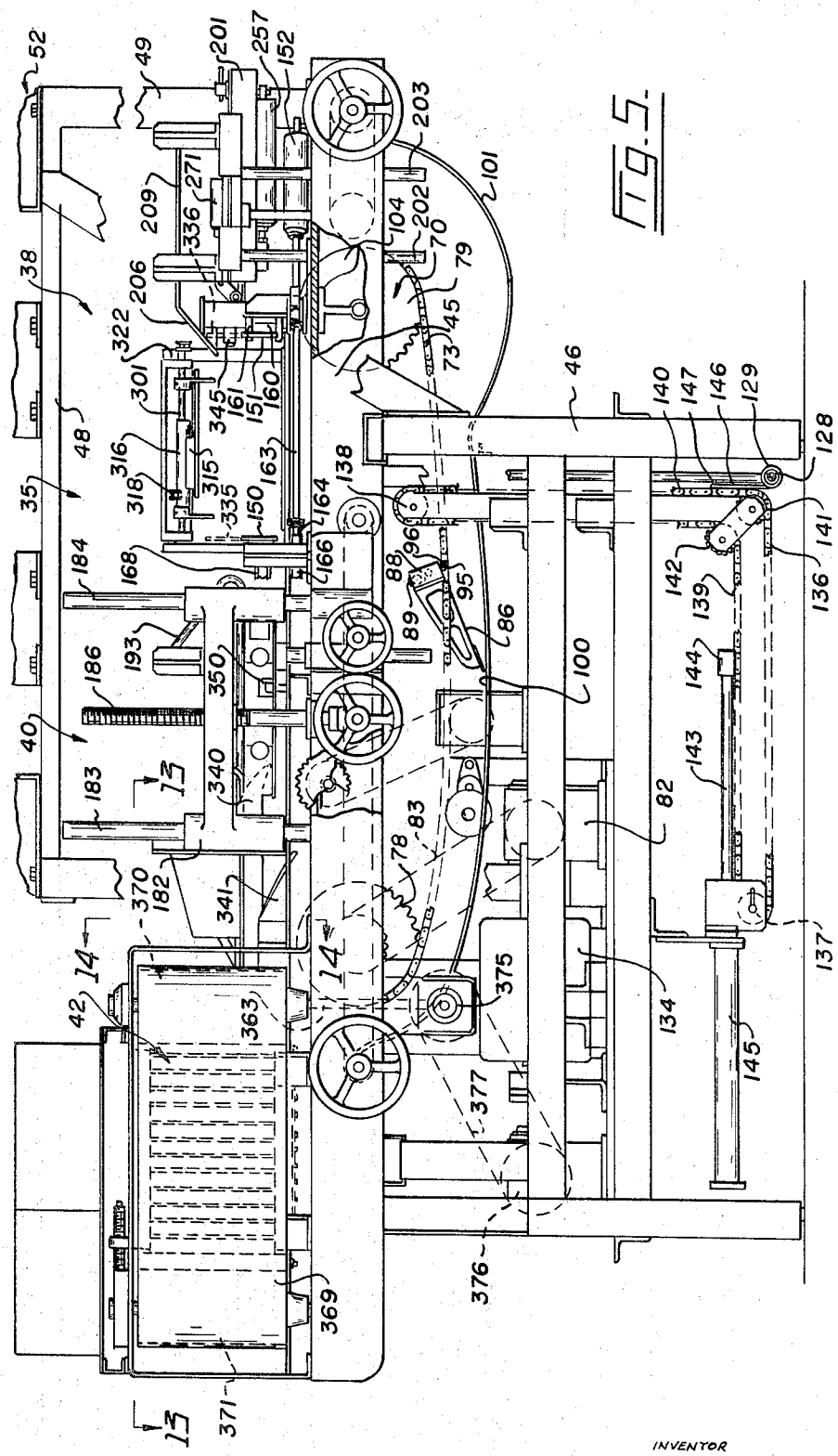

FIG. 5.

INVENTOR
HANS HAGEDORN
BY
Fetherstonhaugh & Co.
ATTORNEYS

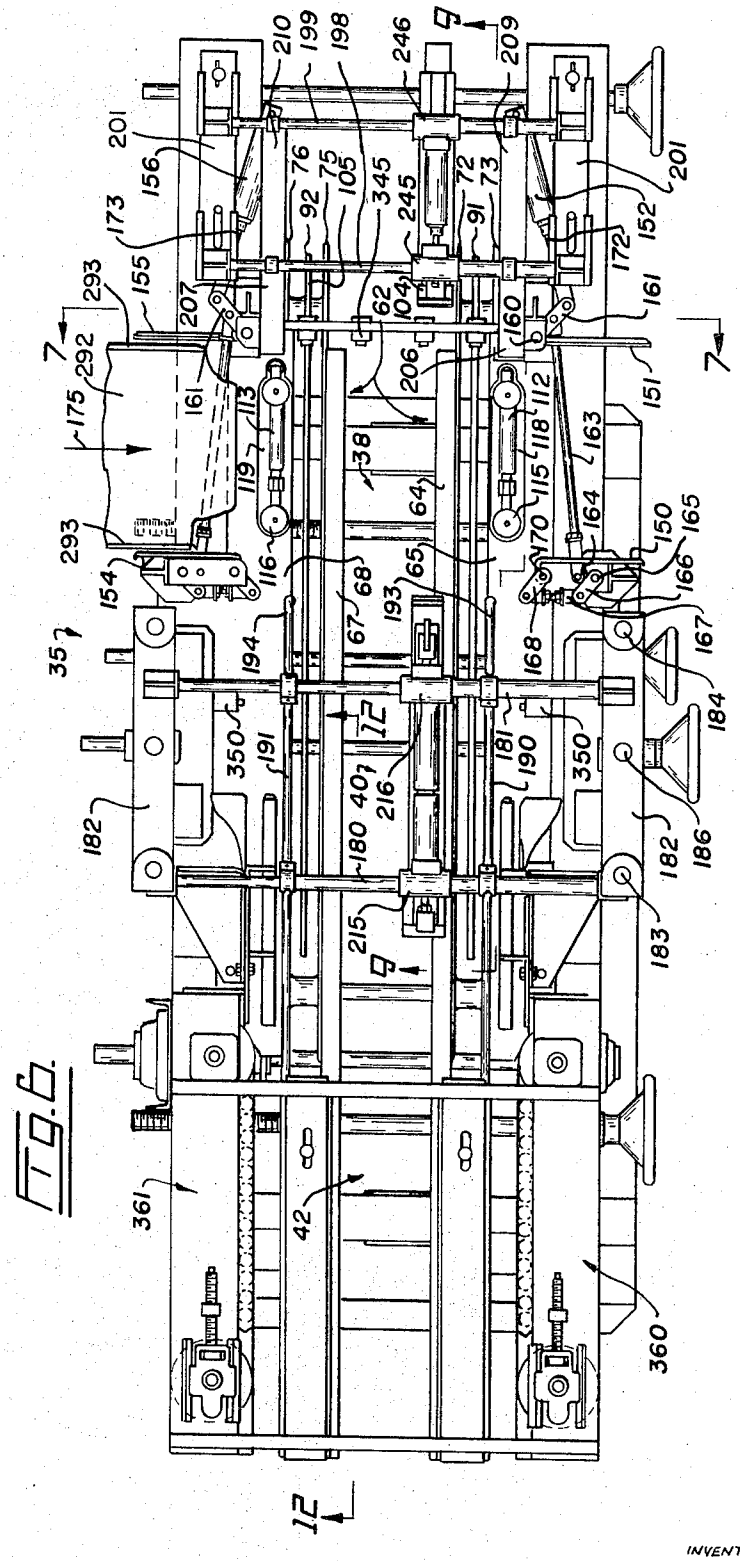

FIG. 6.

INVENTOR
HANS HAGEDORN

BY
Fetherstonhaugh & Co.
ATTORNEYS

Fig. 7.

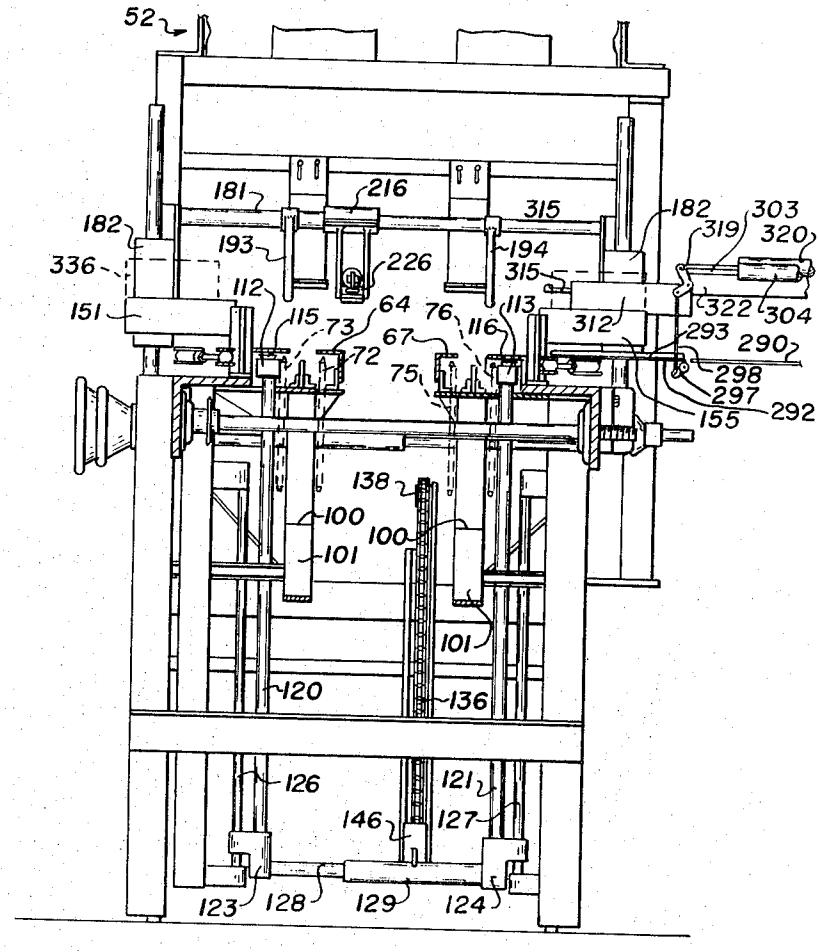

INVENTOR
HANS HAGEDORN
BY
Fetherstonhaugh & Co.
ATTORNEYS

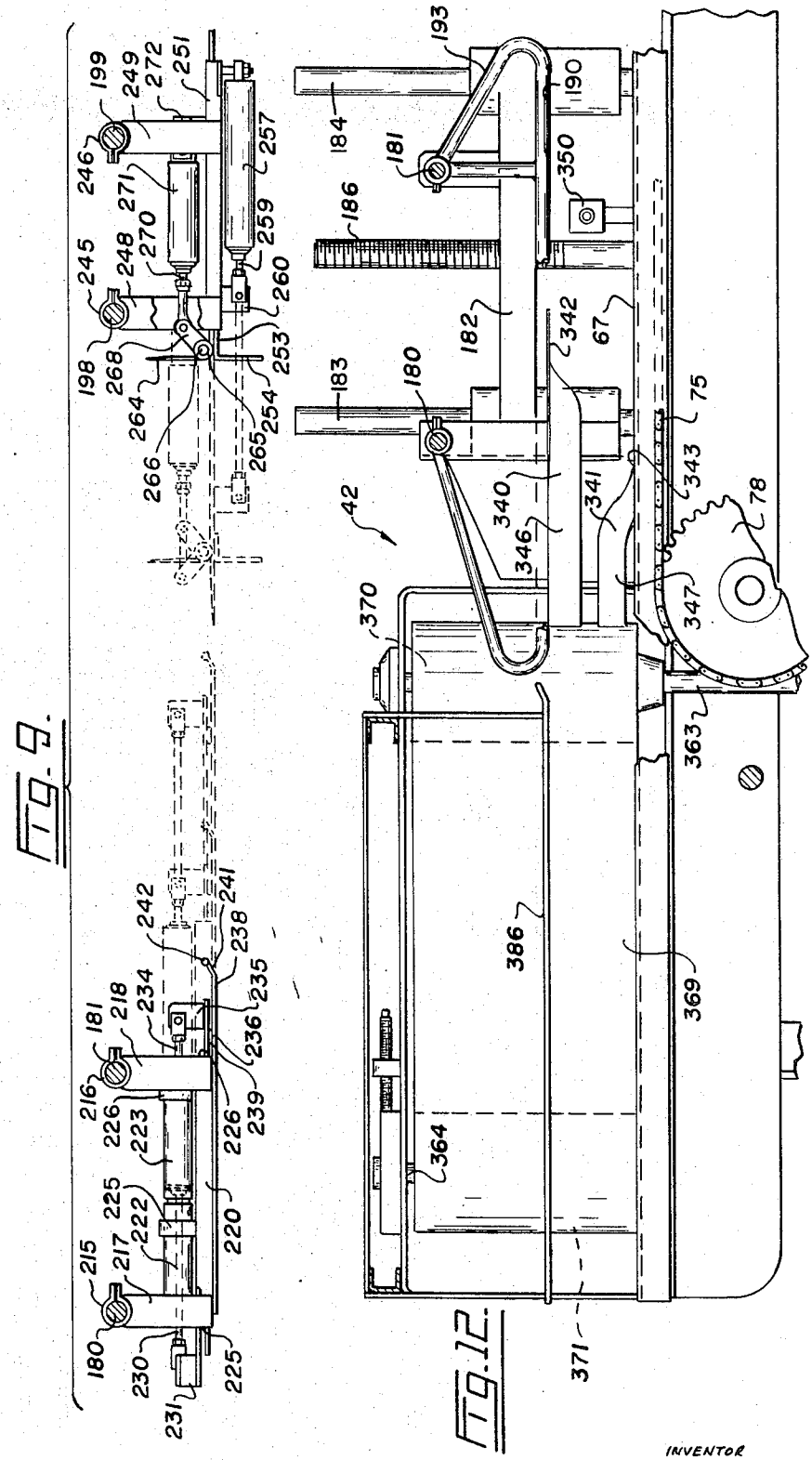

FIG. 9.

FIG. 12.

INVENTOR
HANS HAGEDORN
BY
Fetherstonhaugh & Co.
ATTORNEYS

Fig. 10.

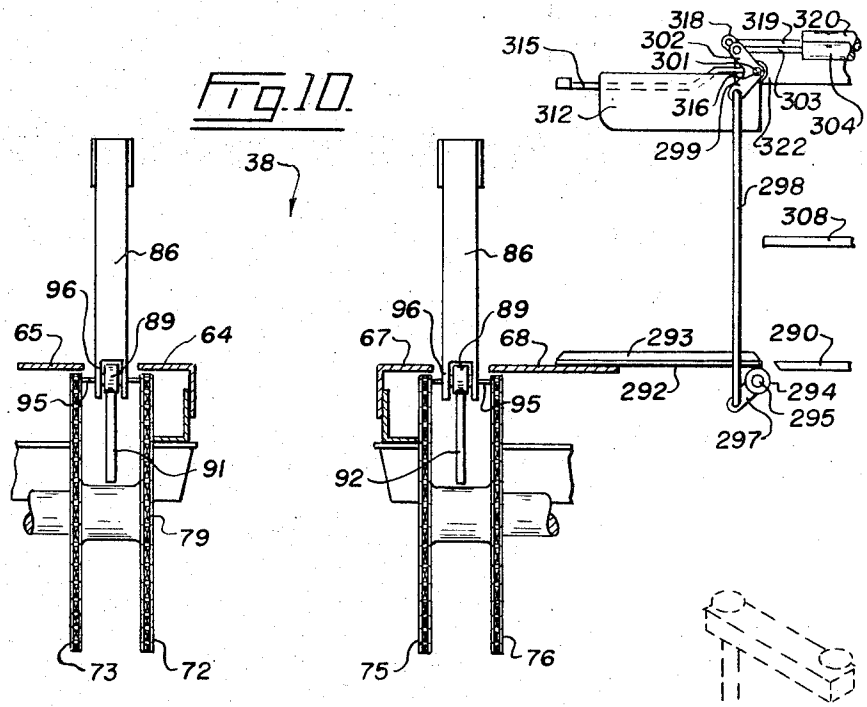

Fig. 11.

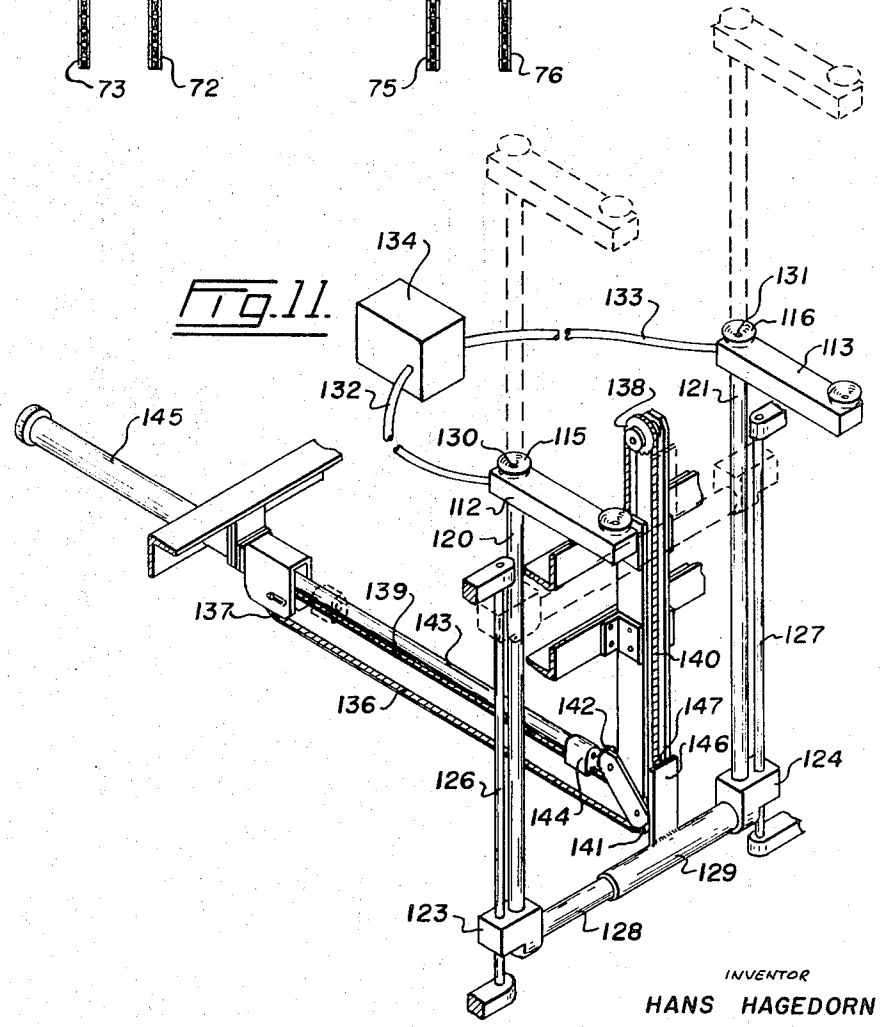

INVENTOR
HANS HAGEDORN
BY
Fetherstonhaugh & Co.
ATTORNEYS

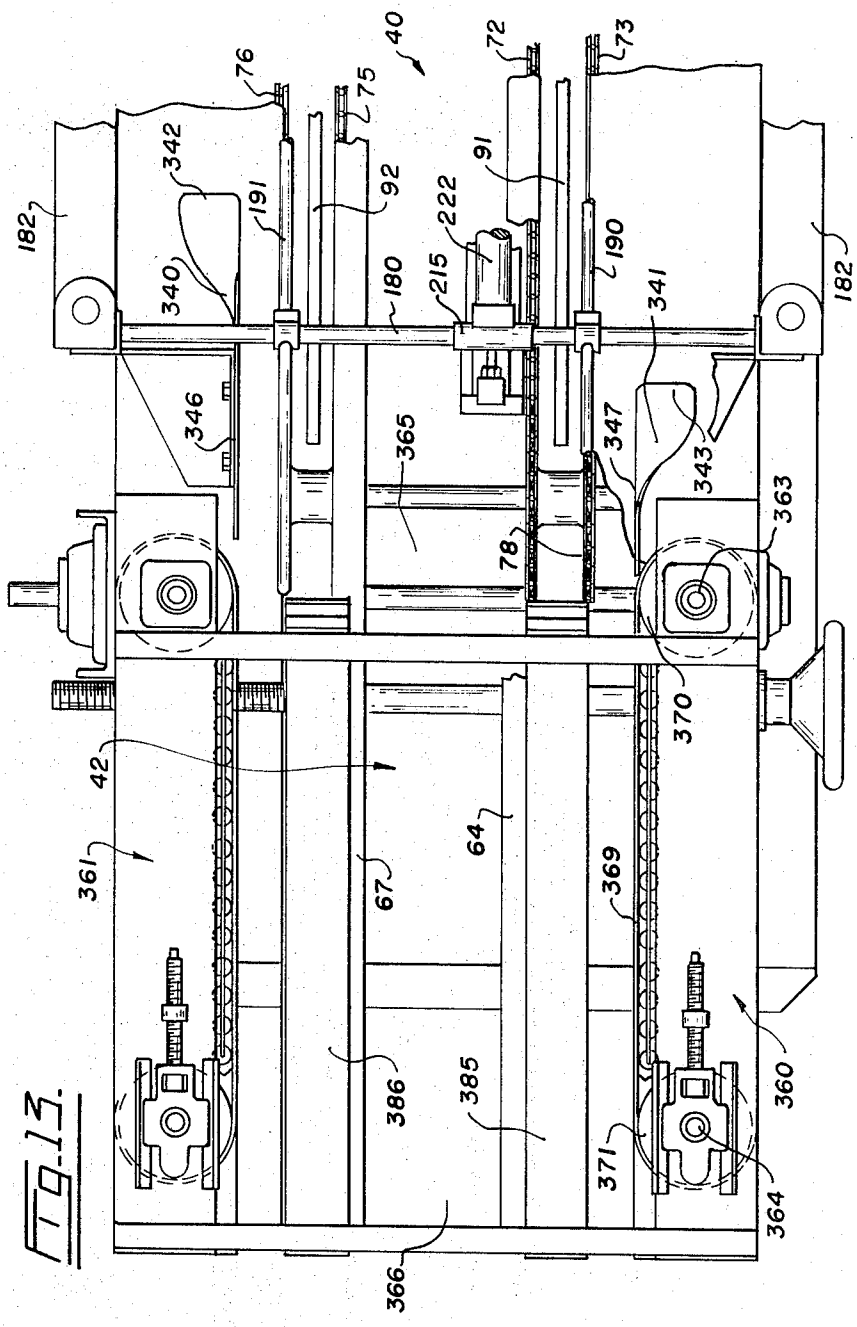

FIG. 13.

INVENTOR
HANS HAGEDORN
BY
Fetherstonhaugh & Co.
ATTORNEYS

Fig. 14.

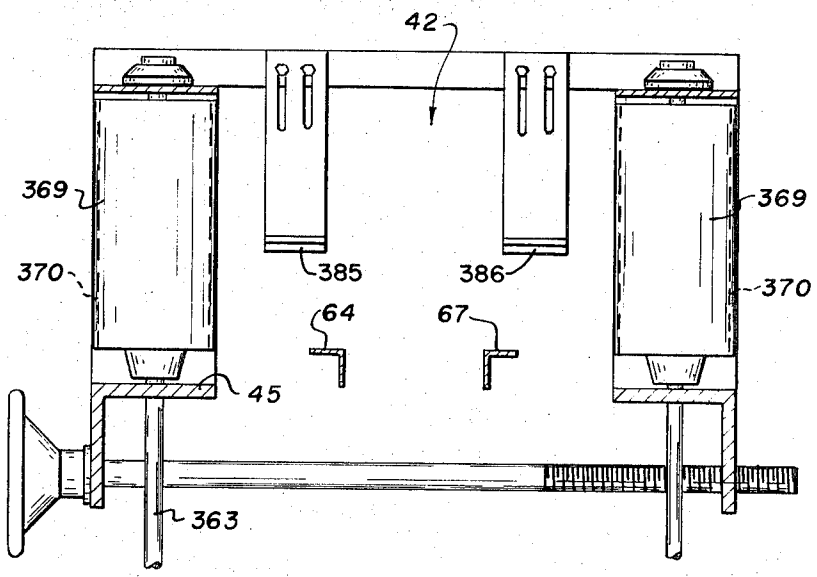

INVENTOR
HANS HAGEDORN
BY
Fetherstonhaugh & Co.
ATTORNEYS

SIMULTANEOUS CARTON FORMER AND LOADER

This invention relates to apparatus for simultaneously forming and loading a carton with containers, such as cans, bottles, packages, and the like.

In the packaging field, open cartons are formed, and after the containers to be packaged are loaded therein, top flaps are glued into place to close and seal the carton. This is a relatively slow process, and results in a waste of carton material, such as corrugated cardboard, because of the necessary large flap overlaps. This also necessitates machinery for forming the cartons, followed by the handling of these piror to the loading operation. Another development has been the end-loading cartons. In the latter a sleeve is formed of the carton material, and then the containers are moved into the sleeve through an open end thereof, after which end flaps are glued into place. This is a faster method than the ordinary carton method and usually wastes less carton material, but it is still necessary to have machines to form the tubes and then to handle these prior to the loading operation.

The present invention overcomes the above drawbacks by providing apparatus in which each carton is simultaneously formed and loaded. One machine does the two jobs, and as the forming and loading takes place simultaneously, there is a great saving of time in the loading and forming operation. The load of containers can be in single tiers or in double tiers. Although it is possible to load in double tiers with the sleeve carton method, it is not very practical. The present apparatus is designed to receive and handle single tiers or double tiers of containers. Another advantage is that during operation of the apparatus the containers are always visible until a stage in the forming operation is reached where they cannot get out of position. One of the drawbacks of sleeve loading is the fact that a container can get out of position when the load is being inserted into the sleeve and not be seen, thereby causing trouble in the end flap gluing stages.

Apparatus in accordance with the present invention includes a hopper for supporting a colume of carton blanks without the weight of the column resting on the lowermost blank. Suction or vacuum means draws the lowermost blank down into loading position, and during this movement side areas of the carton are folded upwardly. After a pair of flaps at one end of the carton have been moved inwardly, a single tier or a double tier of load containers is moved against these flaps which are fully supported at this time and onto the portion of the blank which forms the carton bottom. The containers are fully visible during this operation so that it is immediately known if any container is out of position. End flaps at the opposite end of the carton are folded inwardly, and then the remaining side areas of the blank are consecutively folded inwardly over the tops of the load containers, glue having been applied to a portion of one or both of these side areas. Another advantage of this apparatus is that the top portion of the loaded carton can be folded down tightly against the containers since no clearance is necessary for movement of the containers as they are located in their final positions within the carton. The loaded carton is now moved out of the loading ositions and along a path where additional end flaps are folded inwardly and secured in position. Although any suitable securing

means may be used for holding the elements of the carton together, such as staples, it is preferable to use glue for this purpose in accordance with general practice. Glue is applied where necessary before the end flaps are folded into final position and pressure applied thereto.

Prior to the loading operation, the load containers are formed into single tiers or double tiers. For a single tier, the containers are formed into a group of a desired number and in a predetermined number of rows. Suitable means moves this group into position over the bottom panel of the blank which has been drawn down into the loading position. If a double tier is required, two groups of the desired number of containers are separately formed, and then one tier is placed on a plate over the other tier, following which the tiers are moved into the forming apparatus. The containers of the upper tier are usually staggered relative to those of the lower tier, and when the lower tier reaches its final position, the upper tier continues to move until each upper container is over and rests upon a lower container.

An example of apparatus in accordance with this invention is illustrated in the accompanying drawings, in which

FIGS. 1 to 4 diagrammatically illustrated the folding of a blank into a carton and the loading during the folding operation,

FIG. 5 is a side elevation of the carton forming and loading apparatus,

FIG. 6 is a plan view of this apparatus with some of the infeed mechanism removed for clarity,

FIG. 7 is a vertical cross-section taken on the line 7—7 of FIG. 6,

FIG. 8 is an enlarged isometric view of the hopper for holding the carton blanks in this apparatus,

FIG. 9 is an enlarged fragmentary longitudinal section taken on the line 9—9 of FIG. 6,

FIG. 10 is an enlarged end elevation of the conveyor in this apparatus, and including an infeed ramp and a stabilizer plate in side elevation,

FIG. 11 is an isometric view of the suction cup arrangement and the drive therefore,

FIG. 12 is an enlarged section taken on the line 12—12 of FIG. 6,

FIG. 13 is an enlarged horizontal section taken on the line 13—13 of FIG. 5, and

FIG. 14 is an enlarged section taken on the line 14—14 of FIG. 5.

GENERAL

Referring to FIGS. 1 to 4 of the drawings, 10 is a carton blank creased and cut to form a bottom panel 11, side walls or panels 12 and 13, a top panel 14 and a narrow securing or glue flap 15. The blank has the same flap arrangement at each end thereof, and these include bottom end flaps 18, side end flaps 19 and 20, and top end flaps 21. The length of securing flap 15 is the same as that of top panel 14, and it may have flaps at its opposite ends, but it is preferred to cut these end flaps away thereby forming notches 23 in the corners of the blank at opposite ends of the securing flap.

The folding and loading of the carton or case takes place in successive steps in the folding and loading apparatus of this invention. The flat blank 10 is drawn downwardly by suction means from the bottom of a hopper into an open U formation as illustrated in FIG. 2. Side end flaps 19 and 20 at one end of the blank are

folded inwardly, and then the load of containers, such as cans **26**, is moved over bottom panel **11**, after which end flaps **19** and **20** at the opposite end of the blank are folded inwardly. Side wall panels **12** and **13** are pressed into vertical positions, and glue, if glue is the securing means, is applied to the outer surface of flap **15**. The securing flap is folded inwardly, and top panel **14** is folded over the load and down onto the glue flap to form carton or case **28**, as illustrated in FIG. **4**. The carton is moved out of the loading position and during this movement glue is applied to portions of side end flaps **19** and **20** of both ends of the carton, and lower and upper end flaps **18** and **21** are folded inwardly. Pressure is maintained against upper panel **14** during this time, and pressure is applied to the end flaps for a period sufficient to enable the glue or adhesive to take a firm hold. Although this apparatus is described in connection with the use of glue for securing the flaps together, it is to be understood that other fastening means may be used, such as, for example, stapling means. In this case, stapling guns would be suitably located to secure top panel **14** to flap **15**, and to secure the two sets of end flaps **18** and **21** in closed position.

FIGS. **5** to **14** illustrate carton forming and loading apparatus **35** for forming a flat blank into a partial carton, loading the carton, and finishing the carton around the load. Apparatus **35** includes a forming section **38** in which the carton is formed and loaded, a folding section **40** in which the upper and lower end flaps are folded and glued in position, and a sealing section **42** in which the flaps are pressed until the glue can firmly hold them in position.

FORMING SECTION

Apparatus **35** includes a base frame **45** mounted on supports or legs **46**, and a supporting frame **48** carried by vertical supports **49** extending upwardly from the base frame. Supporting frame **48** is located above forming section **38** and folding section **40**.

A hopper **52** is mounted on supporting frame **48** above forming section **38**. This hopper holds a stack of blanks **10** above the forming section, see FIG. **8**. Hopper **52** is made up of a pair of opposed corrugated walls, and a pair of opposed smooth walls. The corrugations of the opposed walls correspond to each other, that is, if a corrugation of one wall projects inwardly of the hopper, the corresponding or opposite corrugation of the opposite wall projects outwardly of the hopper. The term "corrugation" as used herein is intended to cover the undulating structure shown, an angular zigzag arrangement or similar structure. The blanks in the hopper rest upon these corrugations so that each set of corrugations supports only a few blanks thereabove. The blanks at the bottom of the hopper rest on suitable supports spaced a little below the lowest corrugations. As there is only the weight of a few blanks on these supports, it is possible to draw the lowermost blank downwardly out of the hopper without having to apply undue force and without danger of tearing the blank. The hopper does not have any bottom, and the lowermost blank is supported by the lowermost opposed corrugations of the hopper walls.

FIG. **8** illustrates hopper **52**. Instead of having opposed solid walls, the walls of this hopper are made up of pairs of opposed plates in order to save material and reduce weight. In this example, one wall of the hopper is made up of pair of corrugated plates **55** and the opposite wall by a pair of corrugated plates **56**, the corrugations of which correspond as described above. The remaining two walls are made up of pairs of plain plates **58** and **59**, all of these plates being suitably mounted on supporting frame **48** and projecting upwardly therefrom. Each of the plates **55** and **56** is formed with a straight vertical section **60** below its lowermost corrugation, and a suitable support projects inwardly of the hopper from this section. In this example, this support is made up of a plurality of small cleats **61**. The ends of a few of the lower-most blanks rest upon support cleats **61**, while the rest of the blanks are supported in small groups by the corrugations of plates **55** and **56**. Plates **58** and **59** keep the blanks in proper alignment over forming section **38**.

Tracks means **62** extends through the apparatus sections **38**, **40** and **42**, see FIGS. **6**,**7**,**10** and **13**, and consists of a pair of spaced plates **64** and **65** laterally spaced from another pair of spaced plates **67** and **68**. These plates act as tracks upon which each blank is formed into a carton and then is transported through the apparatus. Either or both of the pairs of plates **64**, **65** and **67**, **68** is or are adjustable laterally of the apparatus so as to be able to accommodate cartons of different sizes. A conveyor **70** is provided for moving the cartons through the apparatus. In this example, conveyor **70** consists of a pair of chains **72** and **73** located beneath plates **64** and **65**, and another pair of chains **75** and **76** located beneath plates **67** and **68**, see FIG. **13**. These chains extend around sprockets **78** and **79** located at the outer ends of adjacent sections **40** and **38** of the apparatus. The sprockets for chains **72** and **73** are mounted on suitable shafts on one side of the apparatus, while the sprockets for chains **75** and **76** are mounted on suitable shafts on the other side of the apparatus so that the chains and sprockets can be adjusted relative to each other for cartons of different sizes. A power unit, such as an electric motor **82**, drives conveyor **70** through a chain **83** which turns the shaft on which the sprockets at one end of the conveyor are mounted.

A plurality of pairs of fingers **86** are mounted on the pairs of chains **72**, **73** and **75**, **76**, see FIGS. **5** and **10**. Each finger **86** is substantially triangular in shape, and has a base **88** carrying therein rollers **89** which are adapted to ride on guide tracks **91** and **92** located respectively between the upper runs of chains **72**, **73** and **75**, **76**. At this time, fingers **86** extend upwardly through the spaces between plates **64**, **65** and **67**, **68**. The forward end of each finger **86** is swingably connected by a link **95** to a pin **96** which extends between and is connected to either the chains **72**, **73** or chains **75**, **76**. When the conveyor chains swing around sprockets **78**, the pairs of fingers **86** swing downwardly and are supported only through pins **96** by their respective chains. If desired, webbing **100** and **101** may be positioned below the lower runs of the conveyor chains in order to support the outer or free ends of the fingers as they move back towards the forming section of the apparatus, as shown in FIG. **5**. When the chains swing around sprockets **79**, the rollers **89** of the fingers engage the curved forward ends **104** and **105** of tracks **91** and **92**, respectively, so that the fingers are moved into the erect position as they move back onto said tracks.

FIGS. **6**, **7** and **11** show a suction or vacuum cup arrangement for consecutively drawing blanks **10** downwardly from hopper **52**. This arrangement includes at

least one and preferably a pair of supporting bars 112 and 113 carrying a plurality of suction or vacuum cups 115 and 116, respectively. There may be one or more of these cups on each bar. Bars 112 and 113 are positioned below slots 118 and 119 in plates 65 and 68, and are normally positioned so that the rims of their respective suction cups 115 and 116 are locted at or slightly below the levels of these plates. Bars 112 and 113 are carried by the upper ends of vertical rods 120 and 121, the lower ends of which are secured to and carried by guide blocks 123 and 124. These blocks are slidably mounted on guide rods 126 and 127 which are fixedly connected to base frame 45. Guide blocks 123 and 124 are connected to the ends of a shaft 128 upon which a sleeve 129 is mounted.

Supporting bars 112 and 113 are hollow and communicate with the interiors of cups 115 and 116 through openings 130 and 131 in said cups. Hoses 132 and 133 connect these bars to a suitable vacuum source 134.

Suction cups 115 and 116 are selectively raised and lowered by suitable apparatus for this purpose. In this example, an endless chain 136 is trained around a lower sprocket 137 and an upper sprocket 138. The chain has a horizontal section 139 and a vertical section 140. This is accomplished by training the chain around intermediate lower and upper sprockets 141 and 142. The outer end of a piston rod 143 is connected at 144 to chain 136, and this piston rod extends out of a fluid cylinder 145 suitably mounted in the apparatus and extending longitudinally thereof. A lug 146 is secured to and extends upwardly from sleeve 129 and is secured to a vertical portion of chain 136 at 147. With this arrangement, when piston rod 143 is retracted from its normal position, chain 136 is moved to lift supporting bars 112 and 113 and their respective suction cups 115 and 116 upwardly sufficiently to cause these cups to engage the lowermost blank in hopper 52. When rod 143 is extended back to its normal position, the suction cups are drawn downwardly to the level of track means 62 so that the blank engaged by these cups rests on the track means.

A pair of swing plates or gates 150 and 151 are located at one side of forming section 38 and operated by a fluid cylinder 152, see FIGS. 5, 6 and 7. Similarly, another pair of swing plates or gates 154 and 155 are located at the opposite side of the forming section and are operated by a fluid cylinder 156. As the operating linkage of gates 150, 151 and 154, 155 are the same, only one will now be described in detail, the same numerals being used for the linkage parts of the two pairs of gates.

Gate 151 is swingably mounted on a vertical pin 160, and an arm 161 projects outwardly from the gate at the pin. A connecting link 163 extends from arm 161 to another arm 164 mounted on a vertical pin 165. This arm 164 forms part of a bell crank having another arm 166 which is connected by a link 167 to an arm 168 connected to gate 150 at the vertical pin 170 upon which said gate is swingably mounted. Bell crank 164, 166 is swingably mounted on a vertical pin 165. Arm 161 of gate 151 is connected to the piston rod 172 of cylinder 152, while arm 161 of gate 154 is connected to the piston rod 173 of cylinder 156. When rods 172 and 173 are extended relative to their respective cylinders, gates 150, 151 and 154, 155 are closed, that is, they extend across the opposite ends of forming section 38. When the piston rods 172 and 173 are retracted, the four gates are opened to permit movement into and out of the forming section. The load of containers to be wrapped or placed in cartons can be directed into the forming section from either side thereof, but in this example, the containers are directed into the forming section in the direction of arrow 175 in FIG. 6.

The mechanism for folding each carton blank into a tube around a load of containers is illustrated in FIG. 9, and can be seen in FIGS. 5, 6 and 7. A pair of horizontal and transverse shafts 180 and 181 are carried at their opposite ends by crossheads 182 slidably mounted on vertical rods 183 and 184 projecting upwardly from base frame 45. These crossheads and shafts 180 and 181 can be raised and lowered by means of screw mechanisms 186. A pair of horizontal upper rails 190 and 191 are carried by shafts 180 and 181 and extend longitudinally of the apparatus above track means 62. The inner ends of rails 190 and 191 are bent upwardly into inclined sections 193 and 194 which are located at one side of forming section 38 above track means 62. Another pair of transverse shafts 198 and 199, see FIG. 6, are mounted at opposite ends on bars 201 which are carried by the upper ends of vertical rods 202 and 203, see FIG. 7, slidably mounted in base frame 45 and adjustably secured thereto in any desired manner. A pair of inclined guides 206 and 207 are mounted at the side of forming section 38 opposite inclined sections or guides 193 and 194. The guides 206 and 207 hang downwardly from horizontal plates 209 and 210 which are supported by shafts 198 and 199. When suction cups 115 and 116 engage the bottom panel 11 of a carton blank 10 and draw the blank downwardly into the forming section, the side panels 12 and 13 of the blank engage inclined guides 193, 194 and 206, 207 so that the blank is formed into an open U during this movement.

Sleeves 215 and 216 are mounted on shafts 180 and 181, respectively, and have hangers 217 and 218 secured to and hanging downwardly therefrom, see FIGS. 6 and 9. These hangers support a horizontal base 220. A pair of axially aligned fluid cylinders 222 and 223 are fixedly secured together at their adjacent inner ends, and slidably extend through bearings 225 and 226 secured to and projecting upwardly from base 220. Cylinder 222 has a piston rod 230 connected at its outer end to a bar 231 which, in turn, is fixedly secured to base 220. Cylinder 223 has a piston rod 234, the outer end of which is connected to a link 235 projecting upwardly from a slide 236 mounted in base 220 for a movement longitudinally thereof. A plate 238 extending outside and parallel to th bottom of base 220 and is secured to slide 236 by a spacer 239. The forward end of plate 238 is bent upwardly at 241 and has a bar 242 extending across its outer end.

When piston rod 230 of cylinder 222 is extended, the fact that it is connected to base 220 through bar 231 causes this cylinder, cylinder 223, slide 236 and plate 238 to move as a unit away from said bar 231. When piston rod 234 is extended from its cylinder 223, only slide 236 and plate 238 are moved outwardly over forming section 38.

At the opposite side of the forming section, see FIG. 9, sleeves 245 and 246 are mounted on shafts 198 and 199, and hangers 248 and 249 are suspended from these sleeves and carry a base 251. A slide 253 is mounted in base 251 for movement longitudinally thereof, and has a flange 254 projecting downwardly

from its outer end. Slide **253** is moved back and forth by a fluid cylinder **257** mounted on the lower surface of base **251**, this cylinder having a piston rod **259** projecting therefrom connected to a link **260** which is secured to and depends from slide **253**.

A folder plate **264** normally projects upwardly from a sleeve **265** mounted on a pin **266** carried by slide **253**. An arm **268** is secured to and is inclined upwardly from sleeve **265**, and the outer end of a piston rod **270** is connected to this arm, said rod extending outwardly from a fluid cylinder **271**, the opposite end of which is connected to a support **272** projecting upwardly from slide **253**.

When piston rod **259** is extended from its cylinder **257**, slide **253** moves outwardly, folder plate **264** and cylinder **271** moving with it. When piston rod **270** of cylinder **271** is extended, folder plate **264** swings downwardly towards a horizontal position.

The containers or cans to be inserted into the cartons are arranged in groups of any desired number, and are moved over a plate **290** by suitable means not shown, towards the forming section **38** of the apparatus see FIG. **10**. The group of containers is moved over a ramp **292** from the plate, said ramp having opposite upstanding side walls **293**. The inner edge of the ramp rests on plate **68**, while a sleeve **294** secured to the undersurface of the ramp near its outer edge is mounted on a supporting shaft **295**.

An arm **297** inclined downwardly from sleeve **294** is connected by a vertical link **298** to one arm **299** of a bell crank mounted on a supporting shaft **301**, the other arm **302** of this bell crank being connected to a piston rod **303** of a fluid cylinder **304**. After a group or load of containers has been moved into the forming section, cylinder **304** is energized to swing ramp **292** upwardly out of the way in order that gate **154** and **155** may be swung shut.

This apparatus is designed so that it can be adjusted to handle two tiers of containers, if desired. The upper tier of containers is moved towards the forming section over a loading plate **308** spaced above loading plate **290**, see FIG. **10**. When the upper and lower tiers of containers are moved towards the forming section, the containers of the upper tier move off plate **308** onto the upper ends of the containers of the lower tier. As the upper tier containers progress, they move beneath upper horizontal guides **312** which are fixedly mounted on shaft **301** and extend parallel to but above ramp **292**. The upper containers also move beneath a stabilizer a plate **315** which extends towards the forming section from a sleeve **316** rotatably mounted on the shaft **301**. An arm **318** is fixed to and inclined upwardly from sleeve **316** is connected to a piston rod **319** of a fluid cylinder **320**, the opposite end of which is mounted on a pin **321** carried by suitable support **322**. Stabilizer plate **315** is inclined downwardly slightly so that as the containers move beneath it they press the free or inner edge of the plate upwardly, but when the last container clears the plate, the latter drops downwardly slightly to engage the last row of containers to prevent them from springing back out of position. When apparatus **35** is adjusted to handle an upper tier of containers, it is necessary to provide gates **150** and **151** with upwardly-projecting extensions **335** and **336**, shown in dotted lines in FIG. **5**. These extensions oppose the movement of the upper tier of containers and so limit the movement thereof into the forming section.

FORMING AND LOADING OPERATION

A stack of blanks **10** is maintained in hopper **52**. As stated above, the corrugations of end plate **55** and **56** keep the load of most of the blanks off the lowermost one. Starting with ramp **292** and stabilizer plate **315** in horizontal positions, if the latter is used, with gate **150**, **151** and **154**, **155** open, and with slides **236** and **253** retracted away from the forming section, cylinder **145** is energized to raise suction or vacuum cups **115** and **116** upwardly to engage the lowermost blank in the stack. A vacuum is applied to the suction cups to cause them to grip the blank. Then cylinder **145** is reversed to move the suction cups and the gripped blank downwardly in forming section **38**, during which movement parts of the blank engaging inclined guides **193** and **206** so that the blank is folded into an open U. Cylinder **152** is energized to close gates **150** and **151**, and this swings the end flaps **19** and **20** of the side walls of the blank inwardly across the end of the blank bottom panel **11**, as shown in FIG. **2**. While suction is maintained in the vacuum cups, the single tier or double tier of containers is moved into the folding section over the bottom of the carton blank against the infolded end flaps which are braced by gates **150** and **151**. If a double tier is being loaded, the upper tier is moved against the vertical extensions **335** and **336** of the gates. The free edge of stabilizer plate **315** drops down behind the containers of the upper tier to keep them in place. Cylinders **222** and **257** are energized to move slides **236** and **253**, respectively, inwardly to straighten up the side walls or panels of the blank. Cylinder **304** is energized to raise ramp **292** and upper guides **312** out of the way, and then cylinder **156** is energized to close gates **154** and **155**. This swings the opposite end flaps **19** and **20** of the blank inwardly across the end of bottom panel **11**, as shown in FIG. **3**.

Guns **345** of standard design and operation, which are mounted at the outer side of folding section **38**, see FIGS. **5** and **6** are operated to squirt glue onto the outer surface of flap **15**, following which cylinder **271** is energized to swing folder plate **264** downwardly. This swings glue flap **15** into the horizontal position. Cylinder **223** is energized to move slide **236** and its bar **242** inwardly to swing the top blank panel **14** inwardly and down onto the glue flap, the slide pressing the panel against the flap at this time. The closed container is shown in FIG. **4**. Its upper and lower end flaps **18** and **21** at this time are still projecting outwardly from the main body of the carton.

Motor **82** is energized to start conveyor **70** moving. This causes a pair of fingers **86** of the conveyor to engage the side wall **13** of the folded carton or case and to move it out of forming section **38** into folding section **40**. Slide plate **238** and then rails **190** and **191** keep the top panel **14** pressed downwardly during this movement. Following this, slide **236** and **253** and their associated elements are withdrawn from the forming section, the gates **150**, **151** and **154**, **155** are swung into the open position, and ramp **191** and guides **312** are swung downwardly into their horizontal positions. When the suction cups are moved upwardly, cylinder **320** is energized to swing stabilizer plate **315** upwardly out of the way so that it does not interfere with the movement of the next blank downwardly into the forming section.

FOLDING SECTION

Glue is applied to the end flaps **19** and **20** and/or end flaps **18** and **21** at opposite ends of the cartons, following which end flaps **18** and **21** are folded inwardly in folding section **40.** Alternatively, glue may be applied to the inner surfaces of flaps **19** and **20** before the latter are folded inwardly. As the mechanism is exactly the same at each end of the carton, one only will now be described in detail, but the same reference numerals are used on the same parts at both sides of the machine.

Upper and lower end folding plates **340** and **341** have horizontal sections **342** and **343,** respectively, at the levels of rails **190, 191** and plates **64, 67,** see FIGS. **5, 12** and **13.** Upper plate **340** twists from its horizontal section **342** into a vertical section **346,** while lower plate **341** twists from its horizontal section **343** into a vertical section **347.** Upper plate **340** is a little advanced relative to lower plate **341** with respect to the movement of the cartons through the apparatus, as shown in FIG. **12,** so that upper end flaps **21** are folded downwardly before the lower end flaps **18** are folded upwardly.

Any suitable glue applicating means can be used. In this example, glue guns **350,** see FIG. **5** are located on opposite sides of track means **62** so as to spray glue on to the infolded end flaps **19** and **20** prior to the folding of flaps **18** and **21.**

As each carton with its load is moved through apparatus **35,** upper flaps **21** thereof engage the upper folding plates **340** at opposite sides of the machine and are folded downwardly thereby. The lower end flaps **18** engage lower folding plates **341** and are folded upwardly thereby, following which the carton continues to advance into sealing section **42.**

SEALING SECTION

Sealing section **42** is made up of spaced parallel identical side sections **360** and **361,** see FIGS. **5, 6, 12, 13** and **14.** One or both of these sections is mounted so as to be movable towards and away from the other section so as to accommodate cartons of different sizes.

Vertical shafts **363** and **364** are mounted at the entrance end **365** and discharge end **366** of the sealing section. An endless belt **369** extends around rollers **360** and **371** mounted respectively on shafts **362** and **364.** Tracks or plates **64** and **67** extend through the sealing section. If desired, shaft **364** can be mounted so as to be adjustable towards and away from sahft **363** in order to enable the tension on belt **369** to be adjusted.

Shaft **363** extends downwardly into a gear box **375** which is operatively connected to a motor **376** through a chain drive **377.** Upper plates **385** and **386** extend longitudinally through section **42** above plates **64** and **67.** These upper plates are aligned with rails **190** and **191** so that they exert a pressure on the upper surface of the carton as it moves through this section.

Conveyor **70** discharges each carton into sealing section **42** where belts **369** on opposite sides thereof pick it up and exert pressure against the enfolded end flaps to firmly press them together and to hold them in this position until the glue has set. Downward pressure is maintained on the carton by plates **385** and **386** at this time.

GENERAL OPERATION

The operation of forming and loading apparatus **35** is obvious from the above. A carton blank is drawn downwardly by the suction cups into forming section **38** and is folded into an open U at this time. Folding gates are operated to fold end flaps at one end of the carton blank inwardly. A single or double tier of containers is moved in a group on to the bottom panel of the partially folded blank. The gates are operated to fold the opposite end flaps **19** and **20** inwardly, and the side panels of the blank are moved into the upright position. Glue is applied to the outer surface of glue flap **15** and the latter bent inwardly, following which the top panel **14** is folded over and pressed against the glue flap.

The carton is then moved through folding section **40** where glue is applied to the infolded end flaps **19** and **20,** and end flaps **18** and **21** are folded over these flaps. The carton then progresses through sealing section **42** where all of the glued flaps are firmly pressed into position and retained until the glue has set.

I claim:

1. Carton forming and loading apparatus for blanks cut and creased for cartons having top and bottom panels, side walls and end flaps, comprising supporting means, a hopper above the supporting means for supporting a stack of substantially flat carton blanks, spaced apart and opposed guides positioned above the level of said supporting means, vacuum cup means normally positioned at or a little below the level of the supporting means, power means connected to said cup means and operable to move the latter upwardly between the guides and against the lowermost blank in the stack and to move the blank engaged by the cup means downwardly between the guides and on to the supporting means, said guides including means for engaging side portions of said blank during downward movement thereof for inclining said side portions into an upwardly outwardly expanding U while concurrently leaving at least one end of the carton completely open, means defining a path for movement of moving a load of containers horizonally through said open end onto the bottom panel of the blank within said outwardly expanding U, operating means connected to the guides to fold the side walls and top panel of the blank around the containers therein, and means for folding end portions of the blank against the containers and to secure said end portions in position.

2. Carton apparatus as claimed in claim **1** in which said hopper includes pair of opposed corrugated walls, the corrugation of one of said walls opposing the corrugations in the other of said walls with each corrugation that curves outwardly of the hopper opposed by a corrugation curving inwardly thereof, whereby each pair of opposed corrugations supports only a relatively few blanks of the stack.

3. Carton apparatus as claimed in claim **1** in which said vacuum cup means comprises a pair of spaced apart bars, at least one vacuum cup on each bar, vacuum means for selectively applying a vacuum to each cup, and said power means is connected to the bars to move said bars between a position where the cups thereof engage a blank in the hopper and a position where said cups are at or below the supporting means.

4. Carton forming and loading apparatus for blanks cut and creased for cartons having top and bottom panels, side walls and end flaps, comprising supporting means, a hopper for supporting substantially flat carton blanks above the supporting means, vacuum cup means

mounted for vertical movement and positioned and operable to grip the bottom panel of a blank in the hopper and to draw said gripped blank down onto the supporting means, guide means located to engage portions of the blank as said blank is drawn downwardly and for inclining said portions into an upwardly outwardly expanding U during said downward movement while concurrently leaving at least one end of the carton completely open, means for defining a path for movement of a load of containers horizontally through said open end onto the bottom panel of the blank within said outwardly expanding U, and folding means for successively raising the side walls of the blank from said upwardly outwardly expanding U to a vertical position and for folding the top panel thereof over said container load, said folding means comprising first and second slide plates on opposite sides of and above the position where each carton blank rests on the supporting means, and power means for moving said slide plates inwardly against the inclined portions of the blank to move said portions into substantially vertical positions after a container load has been moved on to said blank.

5. Carton apparatus as claimed in claim **4** including power means for moving said first slide plate further inwardly to fold the top panel of the blank over said load.

6. Carton apparatus as claimed in claim **4** in which said blank has a securing flap opposed to the top panel, and including a normally vertical folding plate swingably mounted on said second slide plate, and power means operable to swing the folding plate to fold the securing flap inwardly over the blank bottom panel.

7. Carton apparatus as claimed in claim **6** including power means for moving said first slide plate further inwardly to fold the top panel of the blank over said load and over said inturned securing flap.

8. Carton apparatus as claimed in claim **1** including a swingably mounted ramp normally arranged to direct container loads on to the bottom panels of blanks positioned on the supporting means, and means for swinging said ramp up out of the way when not required.

9. Carton apparatus as claimed in claim **1** including horizontal guide means positioned to press against the tops of containers being moved on to blanks positioned on the supporting means, and means for swinging said guide means out of the way when not required.

10. Carton apparatus as claimed in claim **1** including a swingably mounted ramp normally arranged to direct container loads on to the bottom panels of blanks positioned on the supporting means, horizontal guide means above the ramp and positioned to press against the top of said containers, and means connected to the ramp and the guide means for swinging the ramp and guide means out of the way when not required.

11. Carton apparatus as claimed in claim **1** including a substantially horizontal stabilizer plate positioned to press against the tops of containers being moved on to blanks positioned on the supporting means and adapted to drop down slightly behind the containers when the latter are in proper position.

12. Carton apparatus as claimed in claim **11** in which said stabilizer plate is swingably mounted, and including means for swinging said plate upwardly out of the way when not required.

13. Carton apparatus as claimed in claim **1** including pairs of gates swingably mounted for horizontal movement at opposite ends of the area where the blanks rest on said supporting mans, and power means connected to said pairs of gates to swing the gates open and closed, said gates being positioned to swing end flaps of the carton blanks inwardly when the gates are closed.

14. Carton forming and loading apparatus for blanks cut and creased for cartons having top and bottom panels, side walls connected to opposite edges of the bottom panel, a securing flap connected to a free edge of one of the side walls, side end flaps connected to ends of the side walls and top and bottom end flaps connected respectively to the top panel and the bottom panel, said top panel being connected to a free edge of the other one of the side walls, comprising a forming section and a folding section arranged in succession, supporting means extending through said sections, and a conveyor extending through the forming and folding sections near said supporting means, said forming section including a hopper for supporting substantially flat carton blanks above the supporting means, vacuum cup means mounted for vertical movement and positioned and operable to grip the bottom panel of a blank in the hopper and to draw said gripped blank down on to the supporting means, guide means for engaging opposite side walls of the blank as said blank is drawn downwardly and for inclining the side walls and the respective securing flap and top panel connected thereto upwardly and outwardly into an upwardly outwardly expanding U while concurrently leaving at least one end of the carton completely open, means defining a path for movement of a load of containers horizontally through said open end onto the bottom panel of the blank within said outwardly expanding U, folding means in the forming section for swinging said side end flaps inwardly, folding the securing flap inwardly, and folding the top panel over the container load and the infolded securing panel to form a carton around said load.

15. Carton apparatus as claimed in claim **14** including in said folding section means for folding said top and bottom flaps over the infolded side end flaps as said carton is moved through the folding section by said conveyor.

16. Carton apparatus as claimed in claim **15** including means in the forming section and in the folding section to apply glue respectively to said securing flap before the top panel is folded thereon and to portions of said end flaps before the top and bottom flaps are folded.

17. Carton apparatus as claimed in claim **16** including pressure means in said folding section positioned to bear against the folded top panels to press said panels against the securing flaps as the cartons are moved through the folding section.

18. Carton apparatus as claimed in claim **16** including a sealing section aligned with said folding section to receive cartons therefrom, and pressure means in said sealing section for moving the cartons therethrough and pressing the folded end flaps until said glue can hold said end flaps.

19. Carton apparatus as claimed in claim **16** including pressure means in said folding section positioned to bear against the folded top panels to press said panels against the securing flaps as the cartons are moved through the folding section, a sealing section aligned with said folding section to receive cartons therefrom, and pressure means in said sealing section for moving the cartons therethrough and pressing the folded end flaps until said glue can hold said end flaps.

20. Carton apparatus as claimed in claim 19 including pressure means in said sealing section positioned to maintain pressure against the top panels during movement thereof through the sealing section.

21. Carton apparatus as claimed in claim 14 in which said hopper is adapted to hold a stack of said blanks, and includes a pair of opposed corrugated walls, the corrugations of one of said walls opposing the corrugations in the other of said walls with each corrugation that curves outwardly of the hopper opposed by a corrugation curing inwardly thereof, whereby each pair of opposed corrugations supports only a relatively few blanks of the stack.

22. Carton forming and loading apparatus for blanks cut and creased for cartons having top and bottom panels, side walls connected to opposite edges of the bottom panel, a securing flap connected to a free edge of one of the side walls, side end flaps connected to ends of the side walls and top and bottom end flaps connected respectively to the top panel and the bottom panel, said top panel being connected to a free edge of the other one of the side walls, comprising a forming section and a folding section arranged in succession, supporting means extending through said sections, a conveyor extending through the forming and folding sections near said supporting means, a hopper above the supporting means in the forming section for supporting a stack of substantially flat carton blanks, spaced apart and opposed guides positioned above the level of said supporting means, vacuum cup means normally positioned at or a little below the level of the supporting means, power means connected to said cup means and operable to move the latter upwardly between the guides and against the lowermost blank in the stack and to move the blank engaged by the cup means downwardly between the guides and on to the supporting means, said guides including means for engaging said side walls of the blank as said blank is drawn downwardly and for inclining the side walls and the respective securing flap and top panel connected thereto into an upwardly outwardly expanding U while concurrently leaving at least one end of the carton completely open, means defining a path for movement of a load of containers horizontally through said open end on to the bottom panel of the blank within said outwardly expanding U, means in the forming section for swinging said side end flaps inwardly, and operating means connected to the guides to swing the side walls inwardly and to fold the securing flap inwardly and to fold the top panel over the container load and the infolded securing flap to form a carton around said load.

23. Carton apparatus as claimed in claim 22 including in said folding section means for folding said top and bottom flaps over the infolded side end flaps as said carton is moved through the folding section by said conveyor.

24. Carton apparatus as claimed in claim 23 including means in the forming section and in the folding section to apply glue respectively to said securing flap before the top panel is folded thereon and to portions of said end flaps before the top and bottom flaps are folded.

25. Carton apparatus as claimed in claim 24 including pressure means in said folding section positioned to bear against the folded top panels to press said panels against the securing flaps as the cartons are moved through the folding section.

26. Carton apparatus as claimed in claim 24 including a sealing section aligned with said folding section to receive cartons therefrom, and pressure means in said sealing section for moving the cartons therethrough and pressing the folded end flaps until said glue can hold said end flaps.

* * * * *