April 9, 1963 J. F. STAPLES 3,084,806

TOWER CRANES

Filed May 9, 1962 3 Sheets-Sheet 1

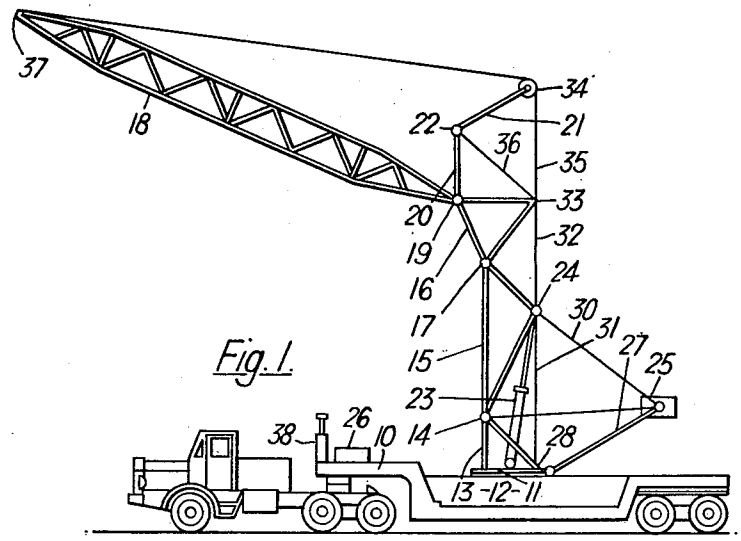

Fig. 1.

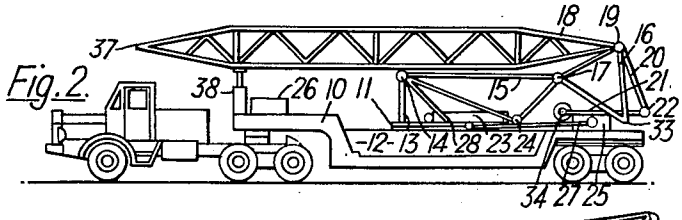

Fig. 2.

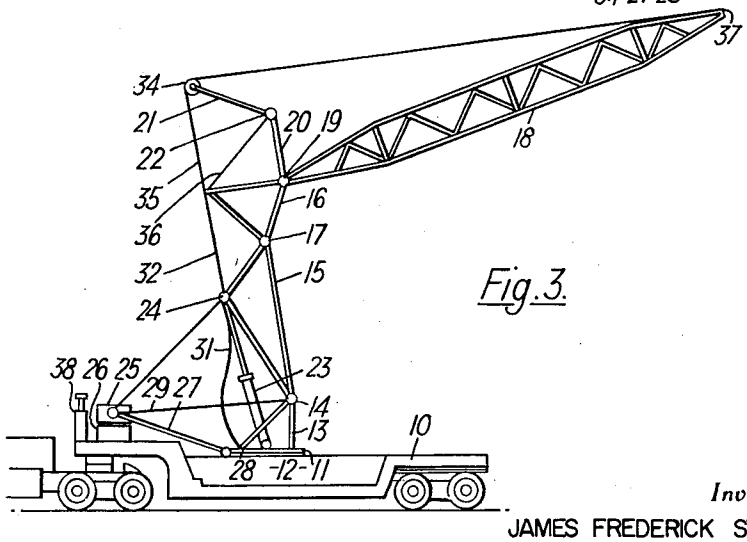

Fig. 3.

Inventor

JAMES FREDERICK STAPLES

April 9, 1963 J. F. STAPLES 3,084,806

TOWER CRANES

Filed May 9, 1962 3 Sheets-Sheet 2

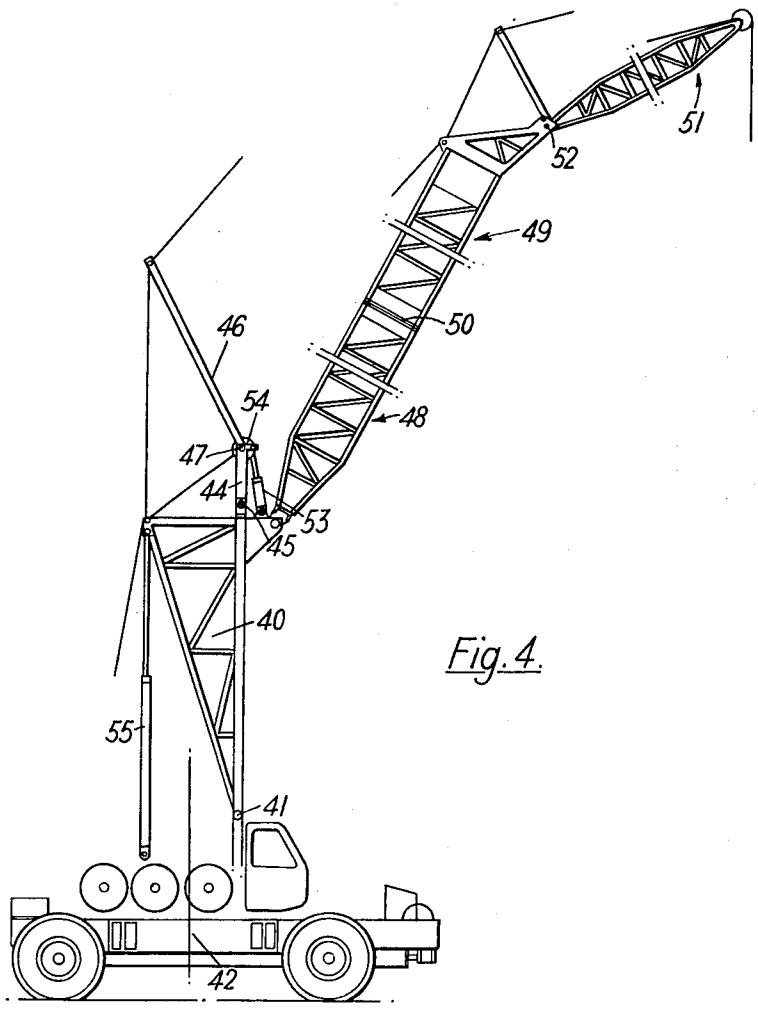

Fig. 4.

Inventor

JAMES FREDERICK STAPLES

April 9, 1963 J. F. STAPLES 3,084,806

TOWER CRANES

Filed May 9, 1962 3 Sheets-Sheet 3

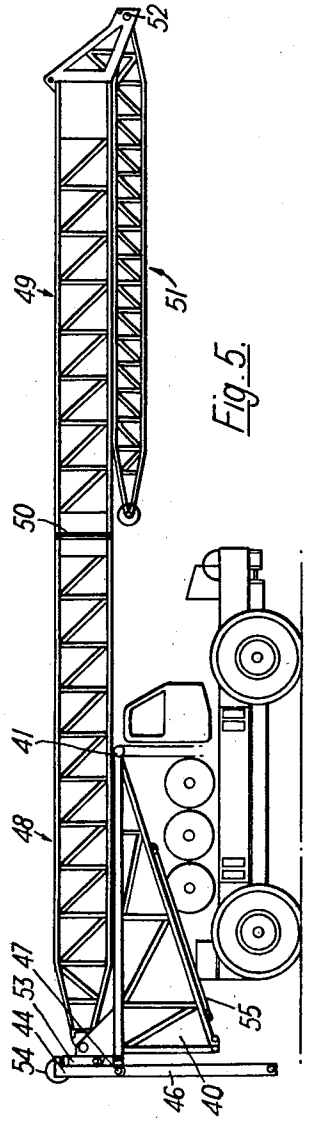

Fig. 5.

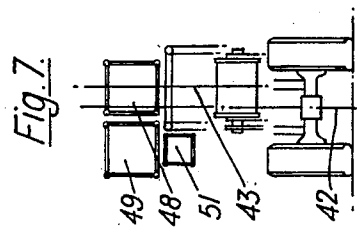

Fig. 7.

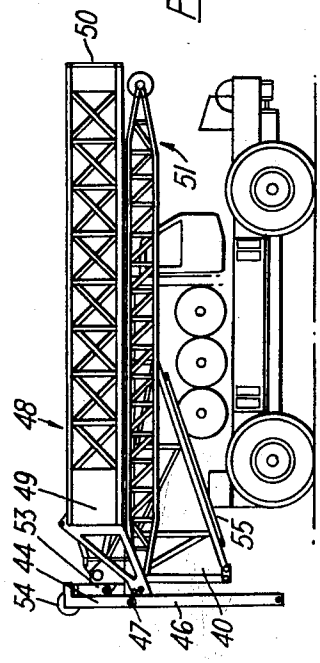

Fig. 6.

Inventor

JAMES FREDERICK STAPLES

United States Patent Office 3,084,806 Patented Apr. 9, 1963

3,084,806

TOWER CRANES

James Frederick Staples, 20 St. Lawrence St., Greenwich, New South Wales, Australia

Filed May 9, 1962, Ser. No. 193,536
10 Claims. (Cl. 212—46)

This invention relates to tower cranes, and in particular to such cranes which may be folded into a relatively small space for stowing.

Tower cranes of the type to which this invention applies consist essentially of a vertical tower and a boom projecting from the tower at an intermediate point upon it.

Cranes of this general type are already known for heavy loads and high lift, that part of the tower above the boom foot being necessary to enable the boom to be supported and moved by luffing lines passing from the boom upwards to the top of the tower and so forming a stable triangular boom-supporting configuration.

The long tower and boom members normally prevent stowage without dismantling these members.

This is particularly disadvantageous where the crane has to be transported from job to job. For example, the road transport regulations limit the maximum dimensions of road transport vehicles in height, width and length and it is a difficult and time-consuming matter to dismantle a crane, stow it for transport within these limits and reassemble it on the new site.

An object of the invention is to provide a structure of tower crane by which it may be folded down to compact size without dismantling the crane.

Another object is to enable relatively large tower cranes to be operated from a vehicle and to be stowed within the regulation limits for road transport on that vehicle.

Various arrangements have been proposed to this end, such as telescoping the tower in sections and stowing the boom underneath the telescoped tower.

In all such arrangements however the length of the boom or that part of the tower above the boom or both have made for great length in stowed position.

A further object of the invention is to provide a tower crane in which the stowed length is not appreciably longer than the boom length, and may in some embodiments be much shorter.

According to the invention, the tower is mounted on a base and consists of a first part below the boom foot, and a second part above it, the tower being mounted on said base for pivotal movement in a direction away from said boom. By this construction the boom lies above the tower in stowed position.

The second part of said tower may be collapsed to lie substantially within the length of said first part to give further economy of space when stowed.

In order that the invention may be better understood, various embodiments will now be described, by way of example only, in relation to the accompanying drawings, in which:

FIG. 1 represents a mobile tower crane in erected position,

FIG. 2 represents the crane of FIGURE 1 in fully stowed position,

FIG. 3 represents the crane, partly erected but rotated 180° from the position shown in FIGURE 1,

FIG. 4 shows a second embodiment of the invention in operative position,

FIGS. 5 and 6 show the crane of FIGURE 4 in partially stowed and fully stowed position, and

FIG. 7 shows a diagrammatic end view in fully stowed position.

The crane, as represented in FIGURES 1 to 3, is

mounted upon an articulated semi-trailer vehicle, the tray **10** of which has four axles, two in front and two at the rear.

The tray **10** supports a turntable **11**, centred between the axle pairs, upon which the whole crane structure is mounted to pivot round a vertical axis **12**.

The crane mast rests upon a base consisting of triangular member **13** rigidly secured along one side to the turntable **11**. Pivoted to base **13** at point **14** is a second triangular member **15**. A third triangular member **16** is pivoted to member **15** at **17**, and the boom **18** is pivotally attached to this third member at point **19**. The members **15**, **16** comprise the first part of the crane tower.

It will be understood that each "triangular member" consists of two triangular side pieces rigidly joined together by at least one cross-piece. The term "triangular member" when used in the claims of this specification is to be understood in the above sense.

The triangular member **16** has no cross-piece at point **33** to allow members **20**, **21** to fold through it on stowing (as shown in FIGURE 2). The views in the drawings, of course, show only the front triangular side piece of each "triangular member."

The pivots at points **14** and **17** each consist, either of a separate pivot on each triangular side piece, or of an elongated pivot extending across from one to the other side piece.

A first rigid mast-like member **20** is also pivoted at point **19** and has a second similar mast-like member **21** pivotally attached to it at its upper end **22**. Members **20**, **21** comprise the second part of the crane tower.

Although these mast-like members are shown only as an elongated beam in the drawings, it is to be understood that they may each consist of two side-beams rigidly cross-connected and that their pivots at **19** and **22** may therefore be of the double type described in relation to the triangular members.

The counterweight beam **27** (to be described later) and the boom **18** will also be of a similar form and with similar pivots.

The general configuration of the crane is therefore a tower having a boom **18** projecting from a point **19** upon it intermediate its ends, the tower consisting of a first part (members **15**, **16**) below the point **19** and a second part (members **20**, **21**) above the point **19** and said first part being pivoted at **14** on a base **13**.

For raising and lowering the tower between stowed horizontal position and working vertical position a hydraulic ram **23** extends from a point on the axis **12** to the apex **24** of member **15** remote from the boom **18**.

This ram is of the "double-acting" type, that is, it is capable of retaining its degree of extension against forces acting both upwards and downwards upon it.

It will be obvious that a mechanical jack of similar characteristics may be substituted.

A counterweight **25** lies in the stowed position (FIGURE 2) directly above the rear pair of axles on the tray **10**, while a second counterweight **26** lies above the front pair of axles, the two counterweights **25**, **26** being equally spaced from the axis **12**.

Counterweight **25** is attached, by a pivot passing through its centre of gravity, to a rigid arm **27** which is radial to the axis **12** and is pivoted for vertical movement near to the point **28** of base **13**.

It will be clear from the description thus far that the rigid members **13**, **15**, **16**, **20**, and **21** are all pivotally connected and will have no structural stability without some further connections.

These further connections are provided by tensioned flexible ties such as steel ropes (shown as single lines in FIGURE 1) and will now be described.

The counterweight **25** is connected to point **14** of

member 13 and point 24 of member 15 by ties 29, 30 respectively.

Points 28 on member 13 and 24 on member 15 are tied as shown at 31. Point 24 is tied as shown at 32 to point 33 on member 16, and point 33 to point 34 on the second mast-like member 21, as shown at 35.

Point 33 is also tied to point 22 at the junction of the members 20, 21, as shown at 36.

Each tie described will, of course, consist of at least two ropes, one at each side of the tower. The phrase "flexible tie" is to be understood in this sense in the description and claims. In addition to the ties, which are all of fixed length and secured at each end to their anchor points, the tip 37 of boom 18 is connected (in known manner) by several falls of luffing rope to the tip 34 of the member 21.

It will be understood that the invention includes a structure in which the flexible ties defined above may be replaced by rigid members, hydraulic rams or mechanical jacks. In particular, the tie 31 between points 24 and 28 may be replaced by a double-acting hydraulic ram or a jack (not shown).

The last fall is continued down from point 34 to a drum (not shown) near point 28, so that haulage by the drum on the luffing rope moves the points 37 and 34 closer together and luffs the boom 18.

When fully erected (as shown in FIGURE 1) it will easily be understood that the weight of the boom 18, and any load carried from it, will hold all ties taut, so that the whole tower structure will be completely stable in the plane of the boom and tower.

Lateral stability is gained by the double construction of the members and pivots and by the double ties previously described.

FIGURE 2 shows the crane in stowed position. In this figure, the ties and luffing falls and rope are omitted for clarity. It will be obvious, however, that all ties will be un-tensioned and loose.

The luffing falls pass around from the tip 37 of boom 18 and are folded around points 19 and 22 to reach the tip 34 of member 21. Thence the luffing rope passes to its drum near point 28.

With this arrangement, haulage of the luffing rope will rotate members 20, 21 counter-clockwise from under member 16, owing to the aggregate tensions in the luffing falls being greater than that in the luffing rope.

To erect the crane, the ram 23 is expanded, thus pivoting member 15 about point 14 counter-clockwise in FIGURE 2.

To prevent boom 18 tipping forward and downward, a hydraulic ram 38 may be provided to give it a preliminary lift.

As the mast rises, the members 20, 21 will drop away under the action of gravity until 20 and then 21 in turn clear the tray 10.

The luffing rope is now wound in, and members 20, 21 are pulled round beyond the member 16 as described above until the ties 35 and 36 tighten. The boom weight acting through members 20, 21 and ties 35, 36 then pivots the member 16 to tighten the tie 32 and the boom weight (acting through the luffing falls and steadied by the double-acting ram 23) tightens tie 31, thus completing the tower structure.

Before the tower reaches the vertical, the tie 30 tightens, and counterweight 25 on its arm 27 is lifted clear of the tray 10.

In this position the whole crane may be turned through 180°, as shown in FIGURE 3. The counterweight 25 can now, by contracting ram 23, be lowered upon weight 26 and secured to it, by any suitable detachable fastening (not shown), so that the tower, when raised to vertical, has the double counterweights 25, 26 attached.

Thus, although the counterweights 25 and 26 are carried for transportation one above each pair of axles, both are readily attached to the arm 27 when the crane is in use, merely by using the erecting mechanism of the crane itself.

Since the counterweight 25, during the first stages of erection of the tower, would exert a compressive force upon the ram 23 through tie 30, the further tie 29 may be provided to take some of the strain, but is so dimensioned that its tension is transferred to tie 30 on full erection of the tower. By prestressing ram 23 by tie 30, tie 31 may in some cases be omitted.

As will be seen from the drawings, the crane, owing to the fact that the boom is on top of the collapsed tower and not beneath it, can be stowed in a length little, if at all, greater than the length of the boom itself.

The stowage of the boom on top has the additional advantage that it may lie beyond the tray 10 and above the vehicle cabin, so that the tray need not be the full length of the boom.

If the tower were rigid, the upper part of the tower between the boom pivot and the top would add to the stowed length at the rear. The top section, however, is folded as shown beneath the remainder of the tower so that this extra length is also avoided.

The combination of pivoted rigid members 15, 16 with flexible ties 31, 32 in the first part of the tower allows a further economy in length, for, in the stowed position, the ties are slackened and the rigid members move into a smaller length.

Therefore these three factors together enable the maximum economy in stowage space for a given crane size and capacity, or alternatively allow a much larger crane to be stowed in a given space.

Referring to FIGURES 4 to 7, the first part of the tower comprises a triangular member 40 pivoted at 41 on a base structure (not shown) rotatable on a turntable (not shown) about an axis 42 (FIGURES 4 and 7), the tower itself having a centre axis 43 (FIGURE 7) offset from the centre line of the supporting vehicle and from the turntable axis 42. The member 40 is pivoted by a double-acting hydraulic ram 55.

The second part of the tower comprises a mast-like member 44 pivoted at 45 on the member 40 and a second mast-like member 46 pivoted at 47 on said first member 44.

The boom in this embodiment extends as before from a point on the junction of the first and second parts of the tower, but is made in three parts. The rigid member 48 nearest the foot is hinged to the intermediate rigid member 49 along a vertical hinge line 50, so that 49 may be hinged sideways (up from the plane of the drawing) with respect to member 48. The hinge 50 is locked in working position and released for stowing. The third rigid member 51 of the boom is pivoted at 52 to member 49, vertical movement thereon resulting.

For stowing, member 51 is first hinged downwards to lie underneath and adjacent the boom as shown in FIGURE 5. Members 49 and 51 are then together hinged horizontally about line 50 to lie beside member 48 as shown in FIGURES 6 and 7. It will be seen that the offsetting of the axis 43 from the centre-line of the vehicle and from turntable axis 42 enables the whole lower part of the tower and the boom to be stowed within the width of the vehicle.

The members 44 and 46 are positioned by the hydraulic ram 53 and the rotary hydraulic unit 54 respectively. For stowing, the member 44 is rotated clockwise by ram 53 and member 46 anti-clockwise by the unit 54 to rest within the member 44 and extend vertically downwards in the fully-stowed position (FIGURE 6). In an alternative arrangement (not shown) the member 44 may be rotated anti-clockwise and the member 46 clockwise so that members 44 and 46 may lie vertically downwards and upwards respectively in stowed position. This arrangement may allow the member 44 to be longer without limiting the length of member 46.

The embodiment of FIGURES 4 to 7 therefore enables

stowage in a minimum of space, the long boom being stowed in parallel parts with the first part 48 lying above the lower part of the tower, and the upper part of the tower (members 44 and 46) being stowed in such a way as to take up very little space indeed.

The various pivoting movements may all be carried out by hydraulic means, a common source of pressure fluid serving to actuate them all.

What I claim is:

1. A tower crane comprising a turntable rotatable round a vertical axis, a base on said turntable, a tower on said base, the axis of said tower being offset from said vertical axis, a boom projecting from a point intermediate the ends of said tower, said tower being mounted on said base for pivotal movement in a direction away from said boom, said boom including a first rigid member nearest said point and a second rigid member connected to that end of said first rigid member remote from said point for sideways hinging movement to a position adjacent and substantially parallel to said first rigid member.

2. A tower crane according to claim 1, wherein said boom comprises a third rigid member connected to that end of said second member furthest from said point for vertical pivotal movement to a position substantially parallel to and immediately beneath said second member.

3. A tower crane comprising a base, a tower mounted on said base, a boom projecting from a point upon said tower intermediate its ends, the tower consisting of a first part below said point and a second part above it, said first part being pivoted to said base for movement in a direction away from said boom, said second part of said tower comprising a first mast-like member mounted for pivotal movement on top of said first part and a second mast-like member pivotally mounted on top of said first mast-like member, said two mast-like members being so shaped that they nest one within the other when pivoted to a contiguous position.

4. A tower crane comprising a base, a tower mounted on said base, a boom projecting from a point upon said tower intermediate its ends, the tower consisting of a first part below said point and a second part above it, said first part being pivoted to said base for movement in a direction away from said boom, said second part of said tower comprising a first rigid mast-like member pivoted on the upper portion of said first part of said tower and a second rigid mast-like member pivoted on the upper portion of said first mast-like member.

5. A tower crane comprising a base, a tower mounted on said base, a boom projecting from a point upon said tower intermediate its ends, the tower consisting of a first part below said point and a second part above it, said first part being pivoted to said base for movement in a direction away from said boom, said first part comprising triangular members lying above one another in working position and pivotally connected, the apices of adjacent triangular members remote from the boom being connected by flexible ties, said second part comprising a first mast-like member attached to the upper portion of said first part for pivotal movement away from said boom and a flexible tie connecting that apex of the upper triangular member remote from the boom to the upper extremity of said first mast-like member.

6. A tower crane in accordance with claim 5, wherein a second mast-like member is connected to the upper extremity of said first mast-like member for pivotal movement away from said boom, the upper extremity of said second member being connected to that apex of the upper triangular member remote from the boom by a flexible tie.

7. A tower crane comprising a turntable rotatable round a vertical axis, a base on said turntable, a tower on said base, a boom projecting from a point intermediate the ends of said tower, said tower consisting of a first part below said point and a second part above it, said first part being mounted on said base for pivotal movement in a direction away from said boom, a rigid arm radial to said axis and pivoted on said base for vertical movement, a first counterweight on said arm, means for lifting said counterweight on said arm when said tower is in working position, a second counterweight, said first and second counterweights being equally spaced from said axis, and detachable means for fastening said counterweights together one above the other.

8. A tower crane comprising a base, a tower mounted on said base, a boom projecting from a point upon said tower intermediate its ends, the tower consisting of a first part below said point and a second part above it, said first part being pivoted to said base for movement in a direction away from said boom, said boom including a first rigid member nearest said point, a second rigid member connected to that end of said first member remote from said point for sideways hinging movement to a position adjacent and substantially parallel to said first member and a third rigid member connected to that end of said second member furthest from said point for vertical pivotal movement to a position substantially parallel to and immediately beneath said second member.

9. A tower crane according to claim 8, wherein said second part of said tower is pivoted on the upper portion of said first part.

10. A tower crane according to claim 8, wherein said second part of said tower comprises a first mast-like member pivoted to the top of said first part of said tower and a second mast-like member pivoted to the top of said first mast-like member, both mast-like members being positively adjustable by hydraulic means.

References Cited in the file of this patent

UNITED STATES PATENTS

2,383,172	Wagner et al.	Aug. 21, 1945
2,831,589	Way	Apr. 22, 1958

FOREIGN PATENTS

509,657	Italy	Jan. 15, 1955
1,001,808	Germany	Jan. 31, 1957
1,022,778	Germany	Jan. 16, 1958
1,075,812	Germany	Feb. 18, 1960
1,091,304	Germany	Oct. 20, 1960