May 6, 1969 C. L. PAYNE, JR 3,442,511

TOY BOWLING GAME

Filed Oct. 3, 1966 Sheet 1 of 2

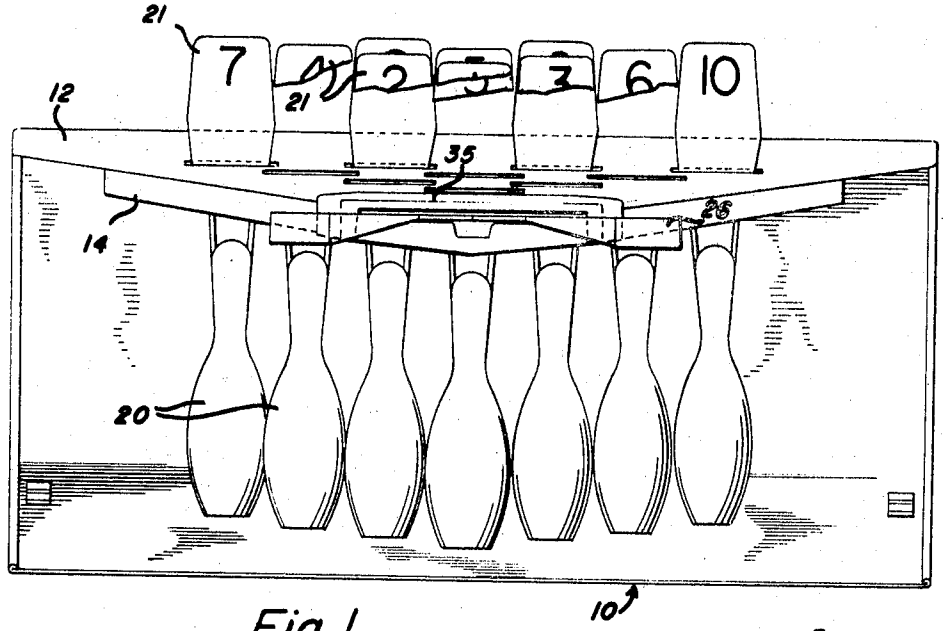

Fig. 1

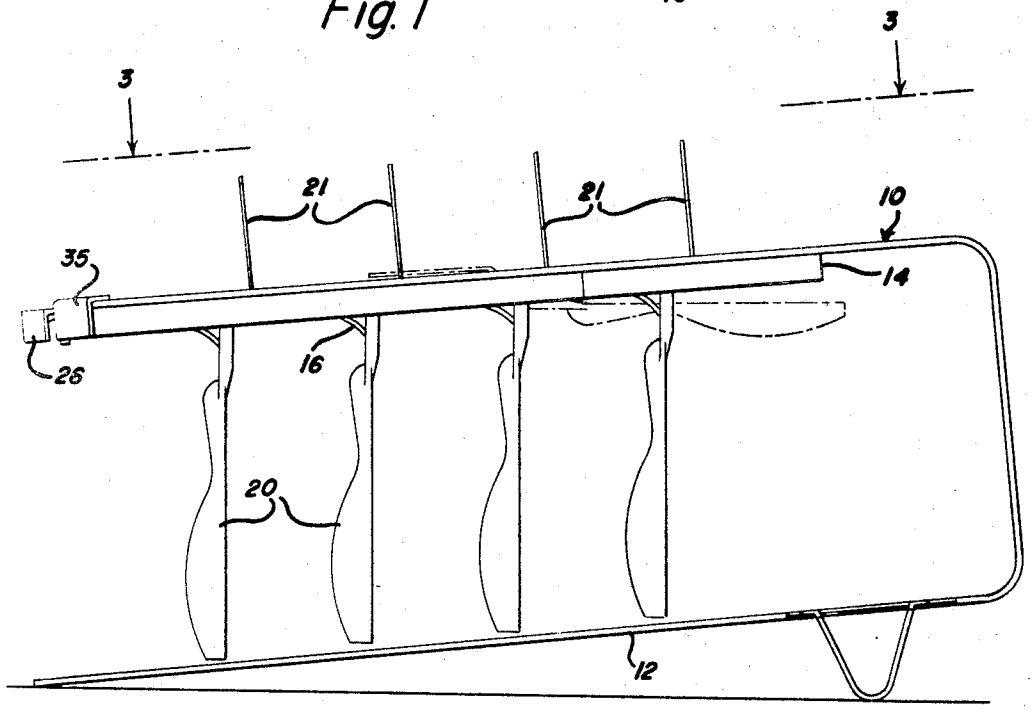

Fig. 2

INVENTOR.
CALVIN L. PAYNE JR.
BY
Borst & Bost
ATTORNEY

May 6, 1969 C. L. PAYNE, JR 3,442,511

TOY BOWLING GAME

Filed Oct. 3, 1966 Sheet 2 of 2

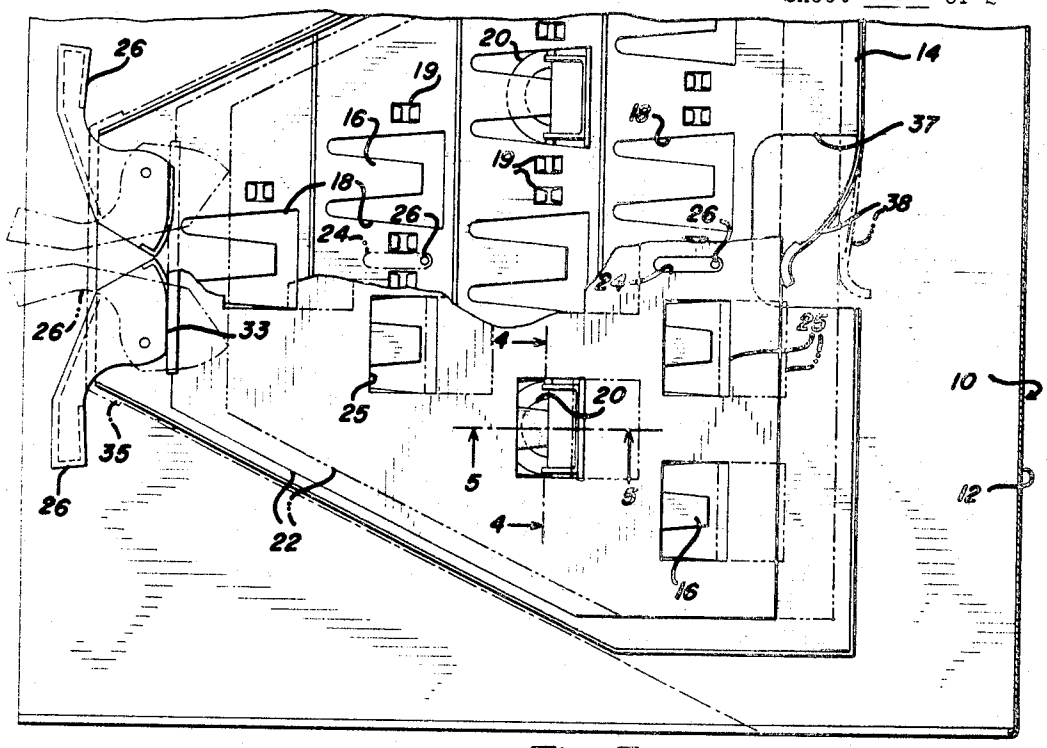

Fig. 3

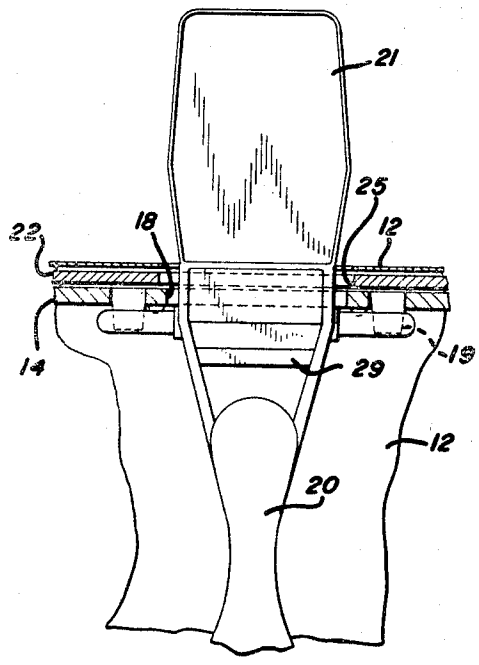

Fig. 4

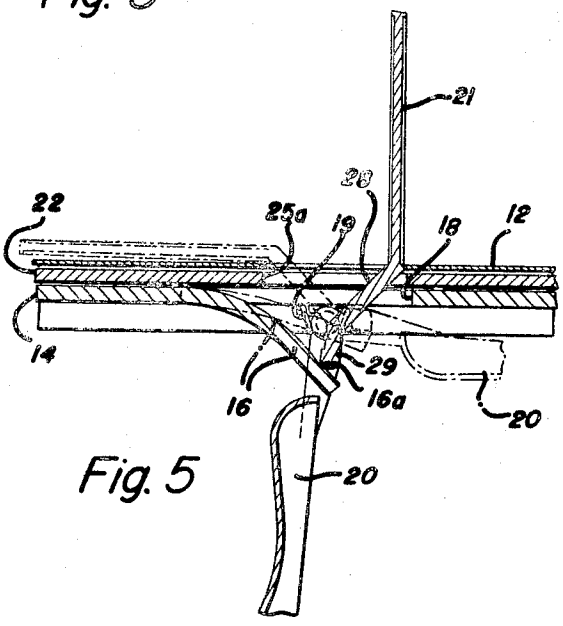

Fig. 5

INVENTOR.
CALVIN L. PAYNE JR.
BY
Borst & Borst
ATTORNEY

United States Patent Office

3,442,511
Patented May 6, 1969

3,442,511

TOY BOWLING GAME

Calvin L. Payne, Jr., Hastings on Hudson, N.Y., assignor to Tudor Metal Products Corporation, Brooklyn, N.Y., a corporation of New York

Filed Oct. 3, 1966, Ser. No. 583,572
Int. Cl. A63d 5/00; A63b 71/00
U.S. Cl. 273—41 2 Claims

ABSTRACT OF THE DISCLOSURE

The application discloses a bowling game having an outer shell of U-shaped configuration. A stationary plate is riveted to the upper leg of the shell. Between the stationary plate and shell is disposed a slide plate used to cam bowling pins hinged to the stationary plate into upright position. A cam surface pin extension angularly oriented to the axis of each pin is provided for this purpose. A marker is connected to the top of the cam surface appearing above the shell. The cam surface extends through apertures in the two plates with each aperture of the stationary plate containing a biasing tongue which bears on a depending detent extension of the cam surface and extending through a hole in the pin. Each detent is adapted to engage a shoulder precisely vertically underneath the horizontal hinge axis of the pin so as to maintain said pin in upright position. When the detent is budged away from said shoulder the tongue causes the pin to collapse.

This invention relates to games and toys and, in particular, to toy devices providing target areas designed to receive in some manner movable pieces or propelled objects in simulation of a recognized sport such as baseball, football, hockey or the like.

The device produced according to the present invention is a simulated bowling game the playing object of which is to knock down pins with a ball, the pins being pivotally supported over the runway and on which the ball is rolled by the player. Special provision is made for simultaneously setting up the pins after the players finish their individual turns. The game device is remarkably simple in construction having in addition to the ten pivotal pins merely two main functional parts, a stationary hinge plate for the pins and a push plate for causing the knocked down pins to assume an upright condition. The push plate is moved by an ordinary cam lever against a biasing element formed out of the hinge plate itself.

One object of the invention is to provide a bowling game of improved design and construction.

Another object of the invention is to provide a game device simulative of the sport of bowling and the modern paraphernalia such as is used to set up the pins in that sport.

Other objects and advantages of the invention may be appreciated on reading the following detailed description of one embodiment thereof which is taken in conjunction with the accompanying drawings, in which:

FIG. 1 is a front view of the bowling game device;

FIG. 2 is a side view of same;

FIG. 3 is a broken sectional view taken on line 3—3 of FIG. 2;

FIG. 4 is a section taken on line 4—4 of FIG. 3; and

FIG. 5 is a section taken on line 5—5 of FIG. 3.

Referring to the drawings, the bowling game **10** has an outer metal shell **12** for a housing formed in the general shape of a U and disposed with its legs nearly parallel to the surface on which the device is supported. Riveted to the underside of the top leg is hinge plate **14** fabricated of polypropylene. In triangular array there are formed in the plate **14**, ten resilient tongue elements **16** projecting from the front edge of as many apertures **18** in the plate. Aside each aperture are disposed hinge components **19** which receive lateral projections atop bowling pins **20** and underneath their upper marker portions **21** connected thereto.

Disposed between the outer shell **12** and the stationary plate **14** is a push plate **22**, made of the material sold under the trademark Masonite, which is provided with a plurality of elongated slots **24** through which extend rivets **26** connecting the hinge plate to the shell. The plate **22** also has formed therein rectangular shaped apertures **25** the front edges **25***a* of which on rearward movement of the plate impinge on upper cam surfaces **28** intermediate the markers **21** and the pins **20**, the surfaces **28** being angularly oriented thereto to permit by camming action the aperture edges **25** to raise the pins simultaneously to an upright condition on rearward movement of the push plate. Depending vertically from the pivotal axis of the pins in this position are cam detents **29**. Engagement between a shoulder **16***a* on the upper surface of each of the elastic tongue elements **16** and a bottom edge of each cam detent hold the pins upright. When this engagement is broken as by a ball in play, the pin thus disengaged is positively forced into its knockdown position due to the biasing engagement of the resilient tongue acting on the forward surface of the cam detent, which is then no longer vertical to the pivot axis.

The push plate **22** is manually urged rearwardly by means of cam levers **26** the rear cam surfaces of which are received in a low friction bevelled groove formed in cap **33** arranged on the front edge of the push plate. The levers **26** are pivoted on tubular pivot pins (not shown) projecting upwardly from plate **14** and which receive rivets provided to secure forward casing **35** to the metal shell and the plate **14**. A cutout **37** is made in the rear edge of the hinge plate **14** and extending from a lateral edge in the cutout is spring element **38** which bears on the rear edge of the push plate **22** to urge it forwardly against its travel caused by the rocking of the levers **26**. In operation the push plate is returned by the spring to its normal forward position after it is used to set up the pins after each play.

Various modifications of the invention may be effected by persons skilled in the art without departing from the scope and principle of the invention as defined in the appended claims.

What is claimed is:

1. A bowling game construction comprising an apertured hinge plate and an apertured push plate slidably mounted on said hinge plate, a biasing tongue downwardly and rearwardly disposed below the apertures of the hinge plate, pin means including simulated bowling

pins hinged to and depending from said hinge plate, said means each including a cam surface extending through the plate apertures and being angularly oriented to the portion of each pin means below the plates and adapted to be engaged by the forward edge of the respective apertures in said push plate, a detent depending from each cam surface and below the hinge axis, a shoulder on each tongue substantially vertically beneath each hinge axis and adapted to engage said detent for holding the simulated pins in upright position, said tongues having a portion rearwardly of said shoulder serving as a second cam surface to cause the pins to collapse when said detent is moved out of engagement with said shoulder.

2. A bowling game construction as defined in claim 1, wherein a marker portion extends above each cam surface parallel with the simulated pin below the plates and out of the plane therewith.

References Cited

UNITED STATES PATENTS

730,987	6/1903	Talbert	273—41
2,535,973	12/1950	Voges	273—41 X
2,722,422	11/1955	Breitenstein	273—41 X
3,171,655	3/1965	Glass et al.	273—41

ANTON O. OECHSLE, *Primary Examiner.*

U.S. Cl. X.R.

273—127