PCT WORLD INTELLECTUAL PROPERTY ORGANIZATION
International Bureau

INTERNATIONAL APPLICATION PUBLISHED UNDER THE PATENT COOPERATION TREATY (PCT)

(51) International Patent Classification 6 : G21B 1/00 — A1

(11) International Publication Number: **WO 95/20816**

(43) International Publication Date: 3 August 1995 (03.08.95)

(21) International Application Number: PCT/IT95/00008

(22) International Filing Date: 27 January 1995 (27.01.95)

(30) Priority Data:
SI94A000001 27 January 1994 (27.01.94) IT

(71) Applicants *(for all designated States except US)*: FOCARDI, Sergio [IT/IT]; Via Ranzani, 5/10, I-Bologna (IT). HABEL, Roberto [IT/IT]; Via dei Tigli, 97, I-Ariccia (IT).

(71)(72) Applicant and Inventor: PIANTELLI, Francesco [IT/IT]; Via Belriguardo, 112, I-Siena (IT).

(74) Agents: BARDINI, Marco, Luigi et al.; Società Italiana Brevetti S.p.A., Corso dei Tintori, 25, I-50122 Firenze (IT).

(81) Designated States: AM, AT, AU, BB, BG, BR, BY, CA, CH, CN, CZ, DE, DK, EE, ES, FI, GB, GE, HU, JP, KE, KG, KP, KR, KZ, LK, LR, LT, LU, LV, MD, MG, MN, MW, MX, NL, NO, NZ, PL, PT, RO, RU, SD, SE, SI, SK, TJ, TT, UA, US, UZ, VN, European patent (AT, BE, CH, DE, DK, ES, FR, GB, GR, IE, IT, LU, MC, NL, PT, SE), OAPI patent (BF, BJ, CF, CG, CI, CM, GA, GN, ML, MR, NE, SN, TD, TG), ARIPO patent (KE, MW, SD, SZ).

Published
With international search report.

(54) Title: ENERGY GENERATION AND GENERATOR BY MEANS OF ANHARMONIC STIMULATED FUSION

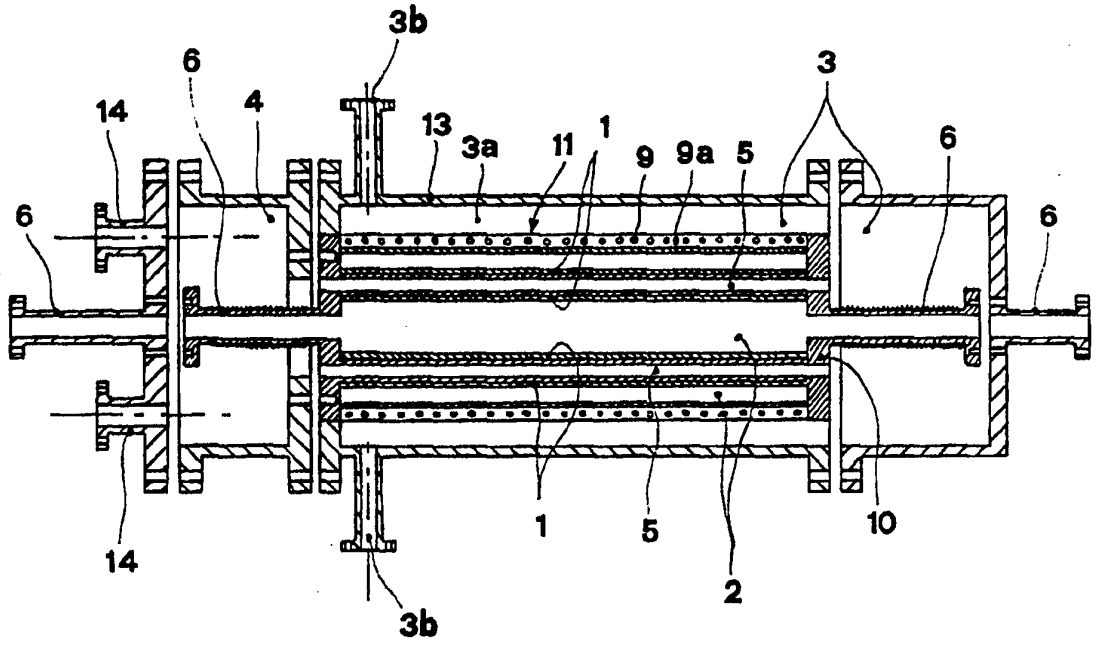

(57) Abstract

A process of energy generation and an energy generator by means of anharmonic stimulate fusion of hydrogen isotopes absorbed on metal comprising a charging step on a metallic core (1) of a quantity of hydrogen isotopes H and D; a heating step in which said core (1) is heated (9) to reach a temperature higher than Debye's temperature of the material composing the core; a startup step wherein a vibrational stress is produced with a rise time less than 0.1 seconds which activates a nuclear fusion of said hydrogen isotopes; a stationary step during which it is exchanged (3,5) the heat produced by the H+D nuclear fusion reaction which occurs in the core (1) because of a steady keeping of a coherent multimodal system of stationary oscillations.

FOR THE PURPOSES OF INFORMATION ONLY

Codes used to identify States party to the PCT on the front pages of pamphlets publishing international applications under the PCT.

AT	Austria	**GB**	United Kingdom	**MR**	Mauritania
AU	Australia	**GE**	Georgia	**MW**	Malawi
BB	Barbados	**GN**	Guinea	**NE**	Niger
BE	Belgium	**GR**	Greece	**NL**	Netherlands
BF	Burkina Faso	**HU**	Hungary	**NO**	Norway
BG	Bulgaria	**IE**	Ireland	**NZ**	New Zealand
BJ	Benin	**IT**	Italy	**PL**	Poland
BR	Brazil	**JP**	Japan	**PT**	Portugal
BY	Belarus	**KE**	Kenya	**RO**	Romania
CA	Canada	**KG**	Kyrgystan	**RU**	Russian Federation
CF	Central African Republic	**KP**	Democratic People's Republic of Korea	**SD**	Sudan
CG	Congo			**SE**	Sweden
CH	Switzerland	**KR**	Republic of Korea	**SI**	Slovenia
CI	Côte d'Ivoire	**KZ**	Kazakhstan	**SK**	Slovakia
CM	Cameroon	**LI**	Liechtenstein	**SN**	Senegal
CN	China	**LK**	Sri Lanka	**TD**	Chad
CS	Czechoslovakia	**LU**	Luxembourg	**TG**	Togo
CZ	Czech Republic	**LV**	Latvia	**TJ**	Tajikistan
DE	Germany	**MC**	Monaco	**TT**	Trinidad and Tobago
DK	Denmark	**MD**	Republic of Moldova	**UA**	Ukraine
ES	Spain	**MG**	Madagascar	**US**	United States of America
FI	Finland	**ML**	Mali	**UZ**	Uzbekistan
FR	France	**MN**	Mongolia	**VN**	Viet Nam
GA	Gabon				

TITLE

ENERGY GENERATION AND GENERATOR BY MEANS OF ANHARMONIC STIMULATED FUSION

DESCRIPTION

Field of the invention

The present invention relates to the field of energy production by means of nuclear fusion and, more precisely, it relates to a process for generation of energy by means of anharmonic stimulated fusion of hydrogen isotopes adsorbed on a crystal lattice.

Furthermore, the invention relates to an energy generator which carries out said process.

Description of the prior art

The problem of procurement of energy has driven industry and research laboratories more and more to study new sources of energy. Among these, a particularly interesting source is the nuclear fusion.

During the studies on nuclear fusion, one applicant has, to that end, realised a "Device for the startup and control of the process of energy production obtained by means of excitation of vibrations of the crystal lattice of a material containing deuterium," described in Italian patent application no. SI/92/A/000002.

The process upon which the functioning of said device is based comprises a step for the preparation of an electrode composed of a metallic material formed either by a single metal or by an alloy of metallic components capable of receiving deuterium, and having a precise crystalline structure, e.g. isometric. Said step of preparation of the electrode comprises first an operation of degassing the electrode in order to clean its crystalline structure. Subsequently, a certain quantity of deuterium (D) is let into the crystal lattice of the electrode at a pre-established temperature and pressure.

Then, when the ratio of the number of deuterium atoms to the metallic atoms (D/Me) exceeds the threshold limit of 0.7, a fusion reaction D+D is activated among the deuterium atoms adsorbed in the crystal lattice following the application of a disturbance which sets the consecutive lattice planes into push-pull vibration. Systems for removal of the thermic energy generated by the fusion are provided for.

The device and process illustrated above, however, present considerable difficulties when it comes to actually putting them into practice. First of all, the use of deuterium is expensive in the case of industrial application of the device. Furthermore, the startup step of the reaction is scarcely controllable or repeatable. In fact, in many cases, the amount of energy obtained has been different than that expected on the basis of the energetic values attributable to a D+D reaction and, in any case, has been not constant in identical initial conditions of preparation and startup.

Summary of the invention

An object of the present invention is, instead, to provide a process for the generation of energy which is able to accomplish a fusion of hydrogen isotopes adsorbed on metal and which can be inexpensively reproduced at an industrial level as well as easily activated and shutdown.

A further object of the present invention is to provide an energy generator which activates the above-mentioned process.

These and other objects are accomplished by the present invention wherein the generation process is characterised by the fact that it comprises:

- a charging step in a metallic core of a quantity of hydrogen isotopes H and D which are adsorbed in the crystal lattice of said core;

- a heating step in which said core charged with hydrogen isotopes is heated to reach a temperature higher than the threshold temperature corresponding to Debye's constant temperature of the material composing said core;

- a startup step of said core wherein a vibrational stress is produced which activates a nuclear fusion reaction of said hydrogen isotopes;

- a stationary step during which it is possible to exchange the heat produced by the H+D nuclear fusion reaction which occurs in the core because of a steady continuation of a coherent multimodal system of stationary oscillations.

A step is also provided for the shutdown of the fusion reaction, in case it is necessary to interrupt it, by means of production of a further vibrational stress which disorganises said coherent multimodal system of stationary oscillations.

The threshold temperature which must, necessarily, be surpassed in said heating step is Debye's constant and which, for many of the metals utilizable, is set out in table I. To have a greater probability of success of the reaction, said threshold temperature must be exceeded by at least a ΔT comprised between several degrees and several tens of degrees, according to the type of material in which the active core is formed. Debye's constant can, in any case, be calculated analytically, since it is equal to $h/K*\nu_{cr}$, with h being Planck's constant, K being Boltzmann's constant and ν_{cr} being a typical frequency of each material (for further details, see Charles Kittel, Introduction to Solid State Physics, John Willey & Sons, New York).

The type of hydrogen to be adsorbed in said core is preferably natural hydrogen or, in other words, having a ratio between isotopes D and H of about 1/6000. It is

however possible to obtain the reaction also with natural hydrogen depleted of or enriched with deuterium, with a ratio of isotopes D to H in any case higher than 1/80000 and preferably comprised between 1/10000 and 1/1000.

The novel characteristic of the generator is that it is provided with a reactor comprising:

- an active core, on which natural hydrogen possibly enriched with deuterium is adsorbed;
- a generation chamber containing said active core;
- a prechamber for heating of a thermal carrier fluid;
- a dome for the collection of said thermal carrier fluid;
- a plurality of tubes wherein said fluid flows from said prechamber to said collection dome crossing said generation chamber.

Brief description of the drawings

Further characteristics and advantages of the process and the generator according to the present invention will become apparent in the description which follows of some of its possible embodiments, given as examples and not limitative, with reference to the attached drawings in which:

- figure 1 shows a longitudinal sectional view of a first embodiment of the generator according to the invention;
- figure 2 is a longitudinal sectional view of a second embodiment of the generator according to the present invention;
- table I sets out the Debye's constant for several metals and alloys.

Description of the preferred embodiments

With reference to figure 1, a generator for actuating the process according to the invention comprises a generation chamber 2 crossed by a tube nest 5 in copper which extends between two flanges 10 welded to a support shell 11 which externally defines chamber 2. Tubes 5

cross flanges 10 and communicate with a prechamber 3 comprising an annular jacket 3a delimited by a cylindrical shell 13 with inlets 3b. Furthermore, tubes 5 communicate with a collection dome 4 communicating through flanged nozzles 14 with means for heat exchange and a circulation pump which are not shown.

Chamber 2 communicates, through axial ducts 6 which cross dome 10 on one side and prechamber 3 on the other side, with a gas tank and an air pump not shown by means of connections of a known type placed externally of shell 13. Ducts 6 are suited to feed hydrogen or other gases into chamber 2.

On tubes 3, a metallic active core 1 of a thickness of several millimetres is electroplated. Around support shell 11, an electric coil 9, for example immersed in a ceramic matrix 9a, is wrapped.

The fluid, coming from inlets 3b and crossing tube nest 5, preheats itself in the jacket 3a, and removes the heat generated in core 1 during an anharmonic fusion reaction of the isotopes of hydrogen, the startup of which will be described further on.

With reference to figure 2, another embodiment of the generator according to the invention comprises an active core 1 having the form of a cylindrical bar inserted in chamber 2 contained in a heating cylinder 20 in which an electric winding 9 is immersed.

A jacket 15 formed by a support shell 11 and a cylindrical shell 13 allows for the passage of a thermal carrier fluid which enters through an inlet 22 and exits from an outlet 23 after having axially lapped shell 11. The gas present in chamber 2 is controlled through chamber 24 communicating with a gas tank and with an air pump not shown by means of connections of a known type. Core 1 is in contact with an electrode 25 suited to transmit to it

an impulse of a piezoelectric type to activate the anharmonic fusion reaction of the hydrogen isotopes as will now be described.

In both the generators of figures 1 and 2, windings 9 have a multiple function since, besides generating a magnetic field necessary for the adsorption of the hydrogen by the core, they also have the function of heating the chamber of the thermal carrier fluid as well as the function of startup of the reaction, for example by means of an electrical impulse with a magnetostrictive effect.

Core 1, in the first case shown (fig. 1), is a metal layer, for example a multiple layer of Nickel and Chromium alternated, while in the second case (fig. 2), it is a cylindrical metallic bar, for example of Nickel-Chromium steel. Core 1 preferably has a homogeneous surface without, in so far as possible, any nicks or defects. In the crystal lattice of core 1, by means of known techniques, natural hydrogen, having a ratio of D isotopes to H isotopes of about 1/6000, is made to adsorb. The percentage of deuterium D with respect to the hydrogen H can also be greater than that indicated even though, with D/H ratio greater than 1/1000, there may not be an economic advantage in the exploitation of the reaction, due to the current costs of deuterium, as well as the difficulty of interrupting the reaction with a normal shutdown operation as will be described further on.

1) Charging step

Among the known techniques for charging hydrogen in the active core so that the hydrogen isotopes become chemically adsorbed in the crystal lattice, there are the following:

- electrolytic adsorption
- immersion of the core in a gaseous environment

containing hydrogen at a pre-established temperature and pressure;

- immersion of the core in solutions of HCl, HNO_3, H_2SO_4;
- immersion of the core in galvanic baths containing, for example, NH_3 when the metal constituting the core is deposited on a support composed of a material such as Cu or ceramic.

Some materials require the application of a magnetic field having an intensity greater than the saturation field, generally greater than 0.1 Tesla. In the two cases of the generators described above, the magnetic field is produced by winding 9.

The absolute pressure of the hydrogen inside the generation chamber must be maintained at values preferably comprised between 1 and 1000 millibar and, in any case, lower than 4 bar, beyond which adsorption no longer takes place unless at extremely high pressures (>50 bar).

The chemical adsorption of the hydrogen isotopes in the metal of the core causes the disassociation of the H_2 and D_2 molecules and the creation inside the crystalline structure of the core of covalent bonds (hydrides) between the H and D atoms with the metal. The electrostatic repulsion among the hydrogen atoms is screened by the excess of negative charge created by the free electrons of the metal. Therefore, the decrease of the electrostatic repulsion due to these bonds allows for the bonded atoms to approach one another more closely than is normally possible with free atoms in identical conditions.

When the crowding of the H and D isotopes adsorbed on the metal in the proportion stated above is sufficiently high, for example with a numeric ratio of hydrogen isotopes to metal atoms greater than 0.3, a strong reticular vibration, however created, can make the two systems Me+H and D+Me approach one another, so that

atoms H and D come to be at a distance lesser than that in which the nuclear force enters into play.

2) Heating step

According to the invention, only when the temperature of the active core 1 is raised to a value higher than Debye's constant of the material composing the core, of which the values of many metals are listed in table 1, is it possible to successfully carry out the startup of the fusion reaction. In fact, only above said temperature do the number of anharmonic oscillations of the crystal lattice, in which the hydrogen is adsorbed, become greater than the number of oscillations of harmonic type with following increase of the probability that the vibrational wave vectors add up one another. It is, however, necessary that, in order to successfully activate the reaction, Debye's constant be exceeded by several degrees to several tens of degrees according to the metal used for the core, so as to allow the "population" of anharmonic oscillations to sufficiently exceed that of the harmonic oscillations.

The heating step can be carried out by means of any known system, for example thermoelectric heating, oxidation of combustibles or other exoenergetic chemical reactions, recombination of ions into polyatomic molecules, laser impulses and immersion in hot fluids.

3) Startup step

At the points of the core on which the hydrogen has been adsorbed or, in other words, in proximity to the external surface of the core, a push-pull oscillation of the lattice can successfully cause two hydrogen isotopes, respectively hydrogen H and deuterium D, to approach one another more closely than the critical distance at which, as described above, the nuclear forces enter into play.

According to the invention, it is possible, in the

conditions described above and only in those conditions, to activate the localised nuclear reaction described above, producing a stress in the active core capable of producing the coherent addition of a great number of wave vectors thus obtaining a local gigantic vibrational impulse capable of sufficiently exciting the crystal lattice where the hydrogen isotopes are adsorbed. Local volume variations due to expansion of the active core surface have been measured which are 20 times greater than those measured in the non active portion of the core.

Each H+D fusion produces ^{3}He, freeing 5,5 MeV, which is sufficient energy to completely vaporise the area surrounding the point in which the reaction has occurred. In this case, the complete H+D reaction would be H+D = ^{3}He + γ of 5,5 MeV. However, in this case, no γ photons or other particles are freed from the core, since the duration of covalent hydrogen-metal bonds is on the order of 10^{-15} - 10^{-16} seconds, whereas the nuclear interaction time is on the order of 10^{-18} - 10^{-21} seconds. Therefore, the energy freed from the fusion can dissipate through the lattice without emission of particles or γ photons. (See Max Born, Atomic Physics, ed. Blacky and Son, Glasgow; A.F.Davydov, Teoria del nucleo atomico, ed Zanichelli, Bologna; G.K. Werthaim, Mössbauer Effect)

In more detail, after having exceeded the Debye's constant, the probability that the H+D reaction is activated is grater when the anharmonic terms of the interatomic displacement become important, and this can happen only when the temperature is sufficiently higher than Debye's constant, at a characteristic temperature for each material. Under these conditions, following the production of a sufficiently strong stimulus by means of an external action, the quanta of vibrational energy crossing the crystal lattice, instead of oscillating in a

disorganised manner, coherently interact with following addition of the wave vectors tangentially to the surface of the active core and with consequent creation of amplified energy peaks in particular points (loci). The wave trains which move on the active material of the core, besides creating localised fusions, form a coherent multimodal system of stationary oscillations inside portions of the active material of the core, thus causing a negative change of entropy and consequent discharge of heat, which can be exploited by the generator according to the invention.

Subsequently, the stationary wave continues to maintain itself by means of the pump effect produced by the H+D reactions. In fact, because the configuration of the lattice is altered by the localised vaporisations caused by the individual H+D fusions displaced in said loci, the wave vectors add up again in other loci, close to the previous ones but where the lattice is still intact, and activate further H+D reactions. With repetition of the fusions, the core comes to have a surface with a plurality of substantially equidistant cavities separated by tracts of still intact lattice, and the mass of the active core becomes progressively smaller as a result of the successive localised vaporisations.

A further, significant contribution to the maintenance of the stationary wave is provided by the interaction of the electrons with the lattice, especially in the presence of a variable electromagnetic field. In fact, every transition from one Fermi's state to another involves the emission of a particle of a given frequency and wave vector. (See Charles Kittel, Introduction to Solid State Physics, John Willey & Sons, New York)

The startup step can be carried out by means of various known types of impulses, as long as the rise time

is less than 10^{-1} seconds.

In cases in which the active core is composed of pure metals or their compounds with other elements or substances, steels, stainless steels, alloys or metallic systems of single or multiple layer, the startup step can be carried out according to one of the following methods.

- Thermic stress method obtained through pressure gradients: polyatomic gas such as H_2, D_2, HD, HT, C_2H_4, NH_3, N_2, O_2, etc., is inserted in the generation chamber with negative enthalpic difference of physical adsorption (ΔH) and a corresponding pressure gradient comprised between 1 millibar and 4 bar. As already known, the gas introduced generates thermic stress on the surface of the active core, due to a transitory dissociation of the gas molecules and further sudden exoenergetic reaction forming again the molecules and catalysed by the surface of the core itself. Such thermic stress causes the formation of wave trains of reaction and quick startup of the process of energy production through nuclear fusion between H and D, as described above. The embodiment of figure 1 is designed for exactly this type of startup in which the polyatomic gas is introduced through ducts 6 shown in figure 1. During the reaction, by means of the passage of current through winding 9 placed along the entire length of the core 1, a constant magnetic field comprised between 0.2 and 1.5 Tesla is maintained.

- Method with mechanic impulse: a mechanical impulse of torsion, traction or compression is applied to the ends of the active core with an intensity and rise time, for example 10^{-1} seconds, sufficient to provoke a structural deformation which then activates the fusion process.

- Method with electric striction: an electrical current impulse is applied to the ends of the active core

with suitable peak values and rise times, for example 1000 Ampere for 30 nanoseconds, to provoke a structural deformation which then activates the fusion process. The embodiment of figure 2 is designed also for this type of startup, wherein the alternate voltage impulse is produced by an electrode 25 connected to active core 1 and fed by means of cables 8.

- Optoelectronic method: A laser beam impulse of high potency, for example 1MW, is engraved on the core and provokes a shock wave and temperature stress which, in turn, cause a sudden structural deformation which then activates the fusion process.

- Radio-frequency method: An impulse of radio-frequency is applied to the active core having a frequency which corresponds either to the resonance frequency of the spins of the hydrogen isotopes or to the plasma frequency of the free electrons of the crystal lattice.

- Ultrasonic vibration method: The active core is contained in a resonant cavity. An energy impulse of ultrasonic vibrations is applied to the active core, having an intensity and duration (for example 10^{-1} seconds) sufficient to provoke the reaction of fusion.

In cases in which the material forming the active core is a type, such as a crystal, which subject to the piezoelectric effect, the startup step can be activated by means of a method with inverse piezoelectric effect, sending to the ends of the metallic core alternate voltage impulses with a frequency equal to that of the mechanic resonance of the core with peak values (for example greater than 5kV) sufficient to provoke a structural deformation which then activates the process of fusion. The embodiment of figure 2 is also designed for this type of startup, in which the alternate voltage impulse is produced by electrode 25 connected to active core 1 and

fed through cables 8.

If, finally, the material forming the active core is of a ferromagnetic type, the startup step can be activated by means of a magnetostrictive method which consists in the production, along the metallic core, of a magnetic field with peak values higher than the intensity of magnetic saturation and a rise time lower than 10^{-1} seconds. This type of startup can be carried out both with the generator of figure 1 and that of figure 2 by applying an electromagnetic impulse through winding 9.

4) Heat exchange step

Subsequent to the startup, the reaction is maintained in stationary conditions by exchanging heat by means of a thermal carrier fluid made to circulate in the tube nest 5 crossing the generation chamber of figure 1 or through jacket 15 of figure 2. The removal of heat must not exceed a level where it makes the temperature of the active core fall below Debye's constant, in which case a slow shutdown of the reaction would occur.

With regard to the thermal power which can be obtained, the dimensions and form of the active core play an important role. The active core can have the form of a rod, a lamina, separate and/or tangled wires, free or pressed powder, with or without binder. For example, in generation chamber 2 of figure 1, the active core can be composed, rather than of metal deposited on tubes 5, of a plurality of bars placed in various points of the chamber itself. Alternatively, chamber 2 can be filled with metallic powder.

Clearly, the temperature of core 1 which houses the reaction must remain well under the temperature of transition, above which the lattice looses its crystalline properties and passes to an amorphous state comparable to the vitreous state, and this happens at temperatures which

are lower than the melting temperature of each metal. In said conditions, in fact, the core would have a response to the oscillations completely different from the behaviour which occurs when the state is crystalline, because the preferential direction on which the wave vectors add up would disappear, with absolutely no possibility of having the above-described reaction.

It is also necessary that the steady functioning temperature to which the core is brought does not approach particular critical temperatures, which are well known for every metal and identifiable from experimentally obtained adsorption diagrams, at which the phenomenon of progressive expulsion of hydrogen from the lattice occurs.

5) Shutdown step

The reaction can be interrupted by arresting the coherent multimodal system of stationary oscillations by simply producing a further vibrational stress which disorganises the system through a positive local production of entropy.

This can, for example, be accomplished by creating a forced vacuum in the generation chamber (absolute pressure less than 0.1 millibar) and introducing a jet of gas with positive ΔH of dissociation, for example H_2. Because of the impact with the active surface, the molecules dissociate, and a rapid removal of the lattice's energy occurs, with consequent negative temperature stress. The sudden temperature decrease provokes the disorganisation of the active loci and the shutdown of the nuclear reaction among the hydrogen isotopes.

Alternatively, even leaving the pressure of the gas inside the generation chamber unaltered, it is sufficient to exchange heat cooling the active core up to the point where the temperature of the core itself is brought below Debye's constant. The exchange of heat can, for example,

be accomplished by making a fluid at a temperature well under Debye's constant circulate in the tube nest crossing the generation chamber.

In order to provide an even more detailed description of the process according to the present invention, in the following, several practical examples will be set out relative to the application of the above-mentioned steps to a metallic active core whose crystal lattice has adsorbed a certain quantity of natural hydrogen.

Example 1

On a 90 mm long bar with a diameter of 5 mm, made of a metallic material (Clunil) formed by isometric crystals having Nickel and Chromium atoms in equal number and alternated, natural hydrogen (D/H = 1/6000) was made to adsorb following the introduction of H_2 at a pressure of 500 mbar and temperature of 220°C with contemporaneous immersion in a magnetic field of 1 Tesla obtained by means of coil 9 wound around the core itself. The generator utilised was the one illustrated in figure 1, with tube nest 5 not coated with metallic layer.

The chamber containing the bar was then gradually brought to a temperature of 20° above Debye's constant, which for Clunil is 192°C.

The startup occurred with the thermoelectric method (by a thermic impulse produced by a current impulse passing through winding 9), with the core inserted at all times in the above-mentioned magnetic field and immersed in natural hydrogen at a pressure of 500 millibar. More precisely, the startup was obtained with an impulse intensity of 1000A and a rise time of 30 nanoseconds.

During the course of the reaction, a total net average heat of 1.29 MJ was removed per day, for 58 days, after which the reaction was stopped with a shutdown

accomplished by the introduction of H_2, after having temporarily provoked a vacuum (0.1 mbar).

While stopping the reaction, it was observed that during the course of the transient, radioactive isotopes were detected, that it is believed are due to the impact against the neighbouring nuclei of the nuclei of H, D, ^3He which are accelerated by the energy of γ photons (5,5 MeV) produced by the last reactions H+D and not given to the lattice for activating further reactions.

Example 2

On a 200 mm long Nickel bar with a diameter of 3 mm, natural hydrogen (D/H = 1/6000) was made to adsorb with the method of immersion in gaseous environment at the critical temperature of 198°C and contemporaneous application of a magnetic field of 1 Tesla obtained by means of coil 9 wound around the core. The generator used was the one illustrated in figure 2.

The chamber containing the bar was then brought to a temperature of 20° above Debye's constant, which, for Nickel, is 167°C.

The startup occurred with the electric striction method, or, in other words, by applying to the core an electrode through which an impulse of piezoelectric nature was transmitted. More precisely, the startup was obtained with an impulse of at least 10kV and a rise time of 0.1 seconds.

During the reaction, a net total average heat of 4.74 MJ was removed per day, for a period of 31 days, after which, the reaction was stopped with a slow shutdown.

Example 3

On a 90 mm long bar with a diameter of 5 mm, made of AISI 316 steel which has been tempered at 400°C to eliminate internal stresses, natural hydrogen (D/H = about

1/6000) was made to adsorb with the method of immersion into acid solution and then both immersion in gaseous environment at the absolute pressure of 600 mbar and application of a magnetic field of 1 Tesla obtained by means of coil 9 wound around the core.

The chamber containing the bar was then brought to a above Debye's constant and precisely at 314°C.

The startup was accomplished both with the thermo electric method and by the thermal stress method due to gaseous recombination.

During the reaction, a net total average heat of 2.64 MJ was removed per day, for a period of 34 days, after which the reaction was stopped with a slow shutdown obtained with cooling below the critical temperature.

Example 4

In a generator like the one illustrated in figure 1, comprising a generation chamber crossed by a tube nest made of copper, on each tube a layer of 2mm of pure Nickel was electroplated, in which natural hydrogen (D/H = about 1/6000) was made to adsorb with the method of immersion in gaseous environment at the absolute pressure of 600 mbar and contemporaneous application of a magnetic field of 1 Tesla obtained by means of a coil wound around the core and immersed in a ceramic matrix.

The chamber containing the strip of tubes was then brought to a temperature of 210°C, 57° above Debye's constant.

The startup was accomplished with the magnetostrictive method, or, in other words, by applying an electromagnetic impulse to the core through winding 9. More precisely, the startup was obtained with an impulse of 0.8 Tesla and rise time of 0.1 seconds.

During the reaction, by means of thermal carrier fluid crossing the strip of tubes, an net total average

heat of 4.9 MJ was exchanged per day, for a period of 6 days, after which, the reaction was stopped with a slow shutdown obtained with cooling below the critical temperature.

The industrial applicability of the generation process and of the generator which actuates said process is, therefore, evident, given that they allow for the production of energy in the form of heat by means of nuclear fusion at limited temperatures, without emission of radioactive or otherwise dangerous particles and for long periods. The materials used both for the active core and for the rest of the generator are inexpensive, thus providing considerable possibilities for economic exploitation.

In cases in which the active core is formed in a material having a higher Debye's constant, such as Silicon (640°K), the temperature at which heat exchange takes place is higher than in the examples described above. Therefore, it is possible to directly exploit the energy acquired by the thermal carrier fluid which crosses the generator, for example to move turbine blades or for similar applications.

The creation of ^{3}He, as a product of the reaction, is, furthermore, also industrially exploitable given the present high cost of this gas.

CLAIMS

1. Process of energy generation by means of anharmonic stimulated fusion of hydrogen isotopes adsorbed on a metallic core characterised in that it comprises:

- a charging step on said metallic core of a quantity of hydrogen isotopes H and D which are adsorbed in the crystal lattice of said core;
- a heating step in which said core charged with hydrogen isotopes is heated to reach a temperature higher than a threshold temperature corresponding to Debye's constant temperature of the material composing said core;
- a startup step of said core wherein a vibrational stress is produced with a rise time less than 0.1 seconds which activates a nuclear fusion of said hydrogen isotopes.
- a stationary step during which it is exchanged the heat produced by the H+D nuclear fusion reaction which occurs in the core because of a steady keeping of a coherent multimodal system of stationary oscillations.

2. Process according to claim 1, wherein during said heating step said threshold temperature corresponding to Debye's constant must be exceeded by at least a ΔT comprised between several degrees and several tens of degrees, according to the type of material in which said active core is formed.

3. Process according to claim 1, wherein during said charging step, heating step, startup step and stationary step a magnetic field having an intensity greater than 0.1 Tesla is applied to said core.

4. Process according to claim 1, wherein during said charging step said hydrogen isotopes made to adsorb in said core have a ratio of D isotopes to H isotopes greater than 1/80000.

5. Process according to claim 1, wherein during said charging step said hydrogen isotopes made to adsorb on

said core have a ratio of D isotopes to H isotopes comprised between 1/10000 and 1/1000.

6. Process according to claim 1, wherein during said charging step said hydrogen isotopes made to adsorb on said core have a ratio of D isotopes to H isotopes of about 1/6000 (natural hydrogen).

7. Process according to claim 1, wherein at the end of said charging step the crowding of the H and D atoms adsorbed on the metal exceeds a numeric ratio of hydrogen isotopes to metal atoms of 0.3.

8. Process according to claim 1, wherein after said stationary step a shutdown step of the fusion reaction is provided by cooling said core below said threshold temperature.

9. Process according to claim 1, wherein after said stationary step a shutdown step of the fusion reaction is provided by means of production of a further vibrational stress which disorganises said coherent multimodal system of stationary oscillations.

10. Process according to claim 9, wherein said shutdown step comprises the introduction after having temporarily provoked a vacuum of a polyatomic gas into a chamber containing said active core causing said further vibrational stress.

11. Process according to claim 1, wherein said startup step occurs by means of a thermal stress obtained by introducing into a chamber containing said core a polyatomic gas with pressure gradient comprised between 1 millibar and 4 bar.

12. Process according to claims 10 and 11, wherein said polyatomic gas comprises H_2, D_2, HD, HT, C_2H_4, NH_3, N_2, O_2 or a mixture of two or more of them.

13. Process according to claim 1, wherein said startup step occurs by mechanic impulse of torsion, traction or

compression applied to the ends of said active core with a rise time lesser than 10^{-1} seconds.

14. Process according to claim 1, wherein said startup step occurs by electric striction obtained by means of an electrical current impulse applied said active core.

15. Process according to claim 1, wherein said startup step occurs by impulses of a laser beam engraved on said core.

16. Process according to claim 1, wherein said startup step occurs by impulses of radiofrequency applied to said active core, having a frequency which corresponds to the resonance frequency of the spins of said hydrogen isotopes.

17. Process according to claim 1, wherein said startup step occurs by radiofrequency impulses applied to said active core, having a frequency which corresponds to the plasma frequency of the free electrons of the crystal lattice of said core.

18. Process according to claim 1, wherein said startup step occurs by impulses of ultrasonic vibrations applied to said active core, the latter being contained in a resonant cavity.

19. Process according to claim 1, wherein said startup step occurs by inverse piezoelectric effect by sending to the ends of the metallic core alternate voltage impulses with a frequency equal to that of the mechanic resonance of said core.

20. Process according to claim 1, wherein said startup step occurs by magnetostrictive effect, by means of the production, along said metallic core, of a magnetic field with peak values higher than the intensity of magnetic saturation and a rise time lower than 10^{-1} seconds.

21. Process according to claim 1, wherein said charging step occurs by electrolytic means.

22. Process according to claim 1, wherein said charging step occurs by means of immersion of said core in a gaseous environment containing hydrogen.

23. Process according to claim 1, wherein said charging step occurs by means of immersion of said core in solutions of HCl, HNO_3, H_2SO_4.

24. Process according to claim 1, wherein said charging step occurs by means of immersion of said core in galvanic baths containing NH_3, the metal constituting the core being deposited on a support composed of Cu or ceramic.

25. Energy generator by means of anharmonic stimulated fusion of hydrogen isotopes adsorbed on metal characterised in that it comprises:

- an active metallic core, on which hydrogen isotopes are adsorbed;
- a generation chamber containing said active core;
- heat exchange means placed inside or around said generating chamber and in which a thermal carrier fluid flows;
- means for starting up an anharmonic fusion reaction of said hydrogen isotopes adsorbed on said core.

26. Generator according to claim 25 wherein said active core has the form of a bar inserted in said generation chamber.

27. Generator according to claim 25 wherein said means for starting up said reaction comprises an electric coil immersed in a ceramic matrix and wrapped around a support shell defining said generation chamber.

28. Generator according to claim 27, wherein said generation chamber is crossed by a tube nest extending between two flanges welded to said support shell, said tube nest crossing said flanges and communicating with a prechamber comprising an annular jacket delimited by a cylindrical shell, said tube nest communicating also with

a collection dome connected with means for external heat exchange and a circulation pump of a thermal carrier fluid.

29. Generator according to claim 27 and 28 wherein said metallic active core is electroplated on said tube nest.

30. Generator according to claim 27 to 29 wherein said generation chamber communicates, through axial ducts which cross said dome on one side and said prechamber on the other side, with a gas tank and an air pump suited to feed hydrogen or other gases into said generation chamber creating thermal stress and starting up said reaction.

31. Generator according to claim 25 and 26 wherein said generation chamber is contained in a heating cylinder in which an electric winding is immersed, a jacket around said cylinder being provided formed by a support shell and a cylindrical shell and allowing for the passage of said thermal carrier fluid, said generation chamber through a dome chamber communicating with a gas tank and with an air pump, said core being in contact with an electrode suited to transmit to it an impulse to startup said reaction.

32. Generator according to claim 25 wherein said core is a metal layer electroplated on a Cu or ceramic support.

33. Generator according to claim 25 wherein said core is a metallic powder present in said generation chamber.

34. Generator according to claim 25 wherein said means for starting up said reaction comprises a piezoelectric electrode fixed to said core.

Tab. I

Al	428 °K	Mg	406 °K	Ta	250 °K
Be	1160 °K	Mo	440 °K	Sn	195 °K
Cd	209 °K	Ni	440 °K	Ti	428 °K
Bi	118 °K	Nb	320 °K	W	405 °K
Cr	610 °K	Pd	374 °K	Zn	300 °K
Cu	344.5 °K	Pu	340 °K	Li	335 °K
Ge	370 °K	Rh	478 °K	Gd	325 °K
Au	162.4 °K	Si	640 °K	Zr	292 °K
In	111 °K	Ag	226.2 °K	Hf	252 °K
Fe	464 °K	Na	158 °K	Sb	199 °K

Constantan	384 °K
Monel	374 °K
Clunil	465 °K

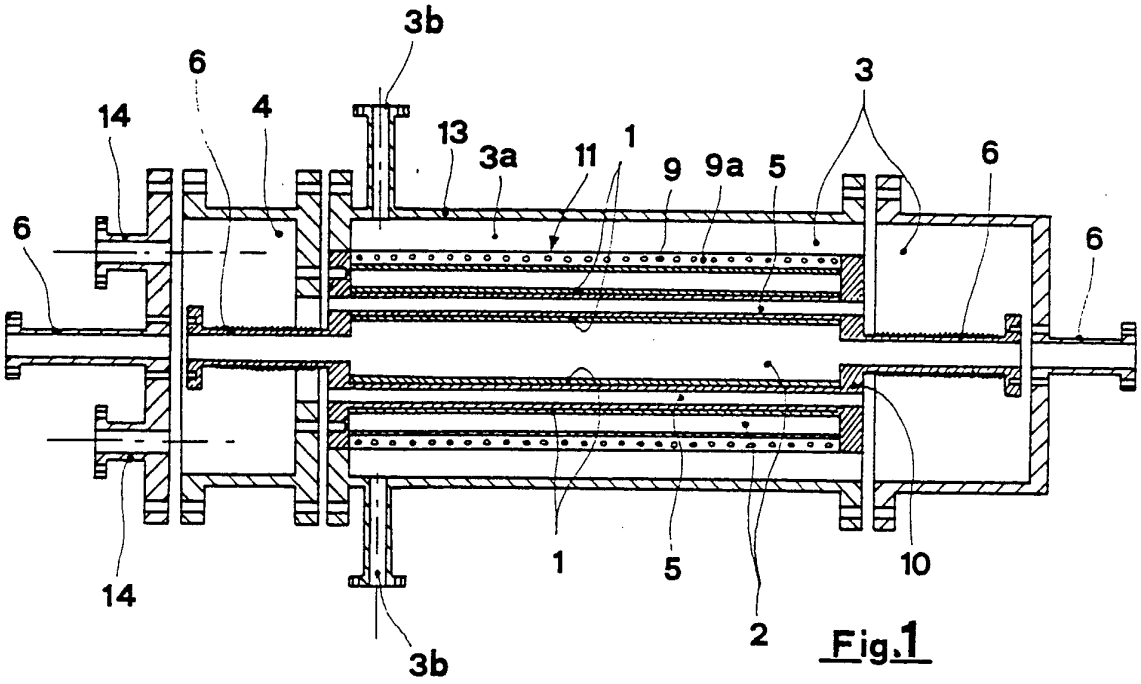
3b
6
14
4
13
3a
11
1
9
9a
5
3
6
6
6
14
1
5
2
10
3b

Fig.1

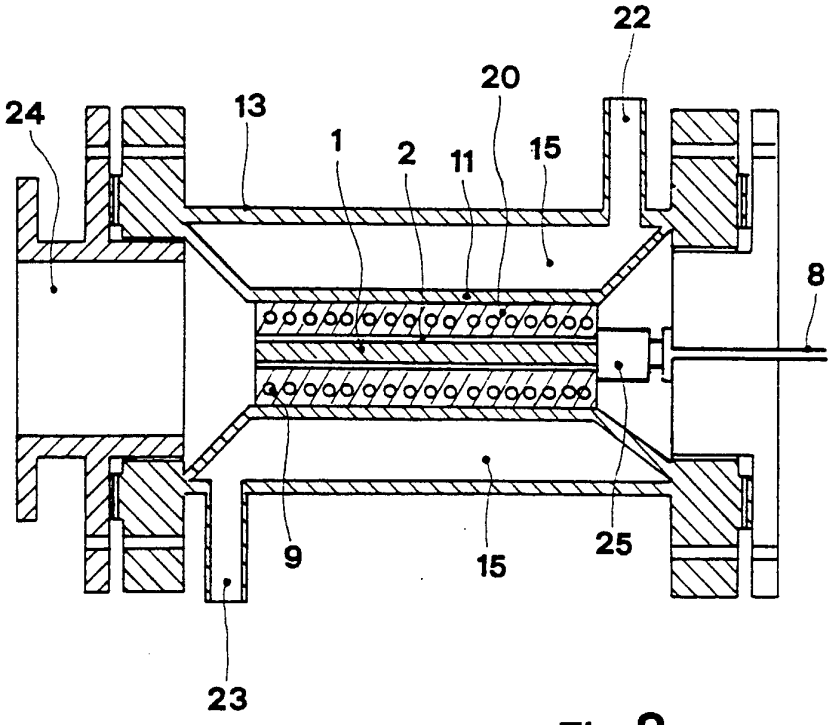
22
20
24
13
1
2
11
15
8
9
15
25
23

Fig.2

INTERNATIONAL SEARCH REPORT

Intern. al Application No
PCT/IT 95/00008

A. CLASSIFICATION OF SUBJECT MATTER
IPC 6 G21B1/00

According to International Patent Classification (IPC) or to both national classification and IPC

B. FIELDS SEARCHED

Minimum documentation searched (classification system followed by classification symbols)
IPC 6 G21B

Documentation searched other than minimum documentation to the extent that such documents are included in the fields searched

Electronic data base consulted during the international search (name of data base and, where practical, search terms used)

C. DOCUMENTS CONSIDERED TO BE RELEVANT

Category °	Citation of document, with indication, where appropriate, of the relevant passages	Relevant to claim No.
A	WO,A,93 05516 (SOUTHERN CALIFORNIA EDISON CO ;WAISMAN JOSEPH L (US)) 18 March 1993 see page 3, line 4 - line 15 see page 5, line 4 - line 34 see page 6, line 30 - page 7, line 21 see page 17, line 30 - page 18, line 23 see page 20, line 32 - page 21, line 11 see page 23, line 24 - page 24, line 16 see figures 4-6A ---	1,7,8, 21,22, 25,26, 28,30,33
A	FUSION TECHNOLOGY, MARCH 1991, USA, vol. 19,no. 2, March 1991 ISSN 0272-3921, pages 369-370, FANG P H 'Deuterium fusion through nonequilibrium induction' see the whole document --- -/--	1,18

[X] Further documents are listed in the continuation of box C.

[X] Patent family members are listed in annex.

° Special categories of cited documents :

"A" document defining the general state of the art which is not considered to be of particular relevance

"E" earlier document but published on or after the international filing date

"L" document which may throw doubts on priority claim(s) or which is cited to establish the publication date of another citation or other special reason (as specified)

"O" document referring to an oral disclosure, use, exhibition or other means

"P" document published prior to the international filing date but later than the priority date claimed

"T" later document published after the international filing date or priority date and not in conflict with the application but cited to understand the principle or theory underlying the invention

"X" document of particular relevance; the claimed invention cannot be considered novel or cannot be considered to involve an inventive step when the document is taken alone

"Y" document of particular relevance; the claimed invention cannot be considered to involve an inventive step when the document is combined with one or more other such documents, such combination being obvious to a person skilled in the art.

"&" document member of the same patent family

Date of the actual completion of the international search	Date of mailing of the international search report
25 April 1995	10.05.95

Name and mailing address of the ISA	Authorized officer
European Patent Office, P.B. 5818 Patentlaan 2 NL - 2280 HV Rijswijk Tel. (+31-70) 340-2040, Tx. 31 651 epo nl, Fax (+31-70) 340-3016	Capostagno, E

Form PCT/ISA/210 (second sheet) (July 1992)

C.(Continuation) DOCUMENTS CONSIDERED TO BE RELEVANT

Category *	Citation of document, with indication, where appropriate, of the relevant passages	Relevant to claim No.
A	WO,A,90 13128 (EPRI) 1 November 1990 see page 16, line 24 - page 17, line 12 see claims 13,16,19	3,20
A	WO,A,90 13125 (UNIV BRIGHAM YOUNG) 1 November 1990 see page 15, line 35 - page 16, line 13	13
A	WO,A,90 14669 (AB TEKNISK UTVECKLING EHR) 29 November 1990 see page 3, line 9 - page 4, line 17	14
A	FUSION TECHNOLOGY, vol. 17,no. 1, January 1990 LA GRANGE PARK, ILL., US, pages 206-208, XP 000084739 STEINERT C 'LASER-INDUCED "SEMICOLD" FUSION' see the whole document	15
A	WO,A,90 13124 (BROKEN HILL PTY CO LTD) 1 November 1990 see the whole document	16,17,27
A	PATENT ABSTRACTS OF JAPAN vol. 015 no. 047 (P-1162) ,5 February 1991 & JP,A,02 281185 (YASUYUKI SUGANO) 16 November 1990, see abstract	18,19,34
A	HIGH TEMPERATURES - HIGH PRESSURES, 1976, UK, vol. 8,no. 3, 1976 ISSN 0018-1544, pages 247-254, HOCH M ET AL 'Enthalpy of solid and liquid metal halides' see abstract	1
A	DE,A,39 13 503 (NMI NATURWISSENSCHAFTL U MEDIZ) 31 October 1990 see the whole document	1,2
A	WO,A,90 14670 (EPRI) 29 November 1990 see page 7, line 34 - page 10, line 22	15,18
A	NUOVO CIMENTO D, JUNE 1989, ITALY, vol. 11D, ser.1,no. 6, ISSN 0392-6737, pages 927-932, VASELLI M ET AL 'Screening effect of impurities in metals: a possible explanation of the process of cold nuclear fusion' see abstract see page 932, paragraph 1-2	1,25

-/--

1

C.(Continuation) DOCUMENTS CONSIDERED TO BE RELEVANT

Category *	Citation of document, with indication, where appropriate, of the relevant passages	Relevant to claim No.
A	ACTA CRYSTALLOGRAPHICA, SECTION A (FOUNDATIONS OF CRYSTALLOGRAPHY), 1 MARCH 1992, DENMARK, vol. A48, pt.2, ISSN 0108-7673, pages 80-98, KUHS W F 'Generalized atomic displacements in crystallographic structure analysis' see abstract ---	1
A	JOURNAL OF PHYSICS F (METAL PHYSICS), MAY 1987, UK, vol. 17,no. 5, ISSN 0305-4608, pages 1051-1064, ROY S K ET AL 'Dynamical properties of /sup 57/Fe impurities in different metallic solids from anharmonic recoilless fractions' see abstract -----	1

INTERNATIONAL SEARCH REPORT

Information on patent family members

Intern. Application No
PCT/IT 95/00008

Patent document cited in search report	Publication date	Patent family member(s)		Publication date
WO-A-9305516	18-03-93	NONE		
WO-A-9013128	01-11-90	NONE		
WO-A-9013125	01-11-90	NONE		
WO-A-9014669	29-11-90	SE-B-	465443	09-09-91
		EP-A-	0473681	11-03-92
		JP-T-	4505364	17-09-92
		SE-A-	8901798	20-11-90
WO-A-9013124	01-11-90	NONE		
DE-A-3913503	31-10-90	NONE		
WO-A-9014670	29-11-90	NONE		