(19) Europäisches Patentamt
European Patent Office
Office européen des brevets

(11) EP 3 587 130 A1

(12) EUROPEAN PATENT APPLICATION

(43) Date of publication:
01.01.2020 Bulletin 2020/01

(51) Int Cl.:
B41J 11/46 *(2006.01)* ***B41J 13/00*** *(2006.01)*
B41J 19/14 *(2006.01)* ***B41J 29/393*** *(2006.01)*

(21) Application number: **18180765.2**

(22) Date of filing: **29.06.2018**

(84) Designated Contracting States:
AL AT BE BG CH CY CZ DE DK EE ES FI FR GB GR HR HU IE IS IT LI LT LU LV MC MK MT NL NO PL PT RO RS SE SI SK SM TR
Designated Extension States:
BA ME
Designated Validation States:
KH MA MD TN

(71) Applicant: **OCE Holding B.V.**
5914 CA Venlo (NL)

(72) Inventors:
- **Van Bekkem, Johannes M.**
5914 CA Venlo (NL)
- **Broers, Frederik J.**
5914 CA Venlo (NL)

(74) Representative: **OCE IP Department**
St. Urbanusweg 43
5914 CA Venlo (NL)

(54) METHOD FOR DETERMINING A DISTANCE IN A PRINTER

(57) Described is a method for determining a distance in a printer comprising one or more print heads mounted on a carriage arranged to move relative to a recording medium along an axis of carriage motion, the one or more print heads having at least one array of printing elements, wherein a swath of information can be printed onto a recording medium by an array of printing elements of a print head printing information onto the recording medium while the carriage is moving, the method comprising the steps of including in a first swath of printed information a first reference mark printed with one array of printing elements; including in a second swath of printed information a second reference mark printed with the one array of printing elements; determining a relative position of the two reference marks, and printing specific portions of each reference mark at a mutual distance along the axis of carriage motion, wherein the specific portions are off-set in opposite directions along the axis of carriage motion for the first reference mark and the second reference mark.

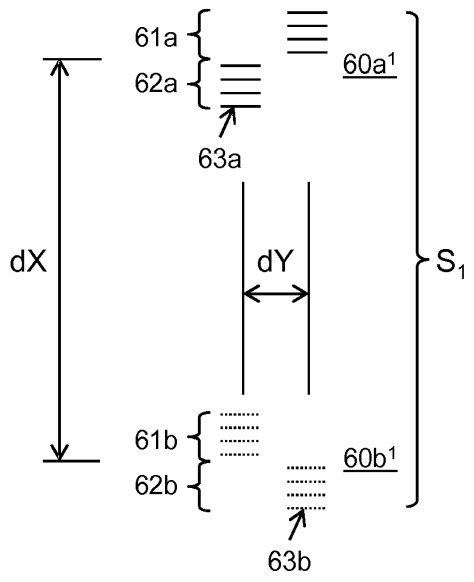

Fig. 3a

EP 3 587 130 A1

Description

FIELD OF THE INVENTION

[0001] The present invention relates to a method for determining a distance in a printer.

BACKGROUND ART

[0002] A scanning-type inkjet printer comprises an inkjet print head mounted on a carriage arranged to move relative to a recording medium along an axis of carriage motion while being guided by a guiding structure. A swath of information can be printed onto a recording medium by an array of jetting nozzles of the print head ejecting sequences of ink droplets towards the recording medium while the carriage is moving. A driving device is provided for driving a recording medium to move relative to the guiding structure along an axis of medium advance normal to the axis of carriage motion. By a recording medium being moved to advance over a certain distance in between the printing of a first swath and the printing of a second swath, multiple swaths of information can be printed side by side onto a recording medium such that the multiple swaths of information together form a complete printed image.

[0003] For optimal print quality, it is important for adjacent swaths of information not to overlap, or be spaced apart on a recording medium. To that end, each time when a recording medium moves relative to the guiding structure in between the printing of a first swath and the printing of a second swath, the advance of the recording medium can be measured, and compared to an advance as expected based on a prescribed motion of the driving device. The driving device can then be controlled such that the recording medium in a next advancing step advances over a distance larger or smaller than in a previous step, depending on a determined difference between the advance as measured and the advance as expected.

[0004] A known method for measuring medium advance in a printer as described comprises the steps of including a first reference mark in a first swath of printed information, including a second reference mark in a second swath of printed information, and optically scanning the two reference marks as printed to determine their relative position on a recording medium along the axis of medium advance, wherein the two reference marks are each printed using a different sub-array of jetting nozzles within the same one nozzle array, the different sub-arrays of jetting nozzles spaced apart within the nozzle array along the axis of medium advance.

[0005] The two sub-arrays of jetting nozzles being spaced apart along the axis of medium advance allows the two reference marks to end up printed in the vicinity of each other on a recording medium despite being included in different swaths. This allows both reference marks to reach the field of view of an optical scanner during a specific pass relative to a recording medium of a carriage carrying such a scanner. Given that the relative position of the different sub-arrays of jetting nozzles within the nozzle array is known, the relative position along the axis of medium advance of the two reference marks on a recording medium, as determined with the help of an optical scanner, is indicative of the advance made by the recording medium in between the printing of the first swath and the printing of the second swath.

[0006] A known reference mark comprises an array of individually recognizable dot sequences each printed with an individual nozzle of a nozzle array, each dot sequence extending along the axis of carriage motion, the different dot sequences spaced apart along the axis of medium advance. A relative position of two reference marks of this type can be determined by averaging the positions along the axis of medium advance of all dots within a dot sequence; then determining a center of a reference mark along the axis of medium advance based on the average positions of all dot sequences within the reference mark, and then comparing the centers of the two reference marks.

[0007] According to a known implementation, in every swath printed, a reference mark assembly can be included, comprising one reference mark printed with a first sub-array of jetting nozzles within a nozzle array, and another reference mark printed with a second sub-array of jetting nozzles within a nozzle array, the two sub-arrays of jetting nozzles spaced apart within the nozzle array along the axis of media advance. Depending on the distance between the two sub-arrays within the nozzle array, after a certain number of swaths printed, the one reference mark as included in a later swath is printed in the vicinity of the other reference mark as included in an earlier swath. This allows the reference marks to be optically scanned in the same one pass of a carriage-mounted optical scanner, such that the relative position along the axis of medium advance of the two reference marks can be checked, and the advance made by a recording medium in between the printing of the earlier swath and the printing of the later swath can be determined.

[0008] A reference mark assembly as described is known to be printed in the left and right margins of a print, so that during the printing of an image, the medium advance can be continuously monitored and the motion of a driving device can be repeatedly adjusted if necessary. The width of each reference mark included in the reference mark assembly can be chosen small, depending on the length of a dot sequence required for reliable measurement of a position of each dot sequence along the axis of medium advance. The reference mark assembly is preferably printed in yellow, allowing the reference mark assembly to be virtually invisible to a viewer of a finished print.

[0009] The accuracy of a distance determined based on a relative position of two reference marks depends to a large degree on the extent to which the position of each reference mark as printed corresponds with a position of the reference mark as expected. In case a reference mark

is printed at a position which is off-set with respect to an expected position, a distance derived from the relative position of two reference marks can be calculated wrong. In the case of medium advance, this may lead to decreased print quality due to inaccurate alignment of consecutive swaths of printed information on a recording medium.

[0010] An objective of the present invention is to provide an improved method for determining a distance in a printer by printing and scanning a pair of reference marks. In particular, the present invention aims to provide a method which is more accurate than known methods.

SUMMARY OF THE INVENTION

[0011] According to an aspect of the invention, a method for determining a distance in a printer by printing and scanning a pair of reference marks as described is characterized by the step of printing specific portions of each reference mark at a mutual distance along the axis of carriage motion, wherein the specific portions are off-set in opposite directions along the axis of carriage motion for the first reference mark and the second reference mark.

[0012] The invention is based on the insight that the guidance of the carriage as provided by the guiding structure and any intermediate bearings may be subject to imperfections, which may lead to the carriage moving to some extent also along the axis of medium advance while moving along the axis of carriage motion. This may lead to a reference mark being printed at an off-set position, which, in turn, will cause a distance determined based on a relative position of the reference mark and a further reference mark to be calculated wrong. In the case of medium advance, this leads to decreased print quality due to inaccurate alignment of consecutive swaths of printed information on a recording medium.

[0013] By specific portions of a reference mark being printed at a mutual distance along the axis of carriage motion, a reference mark can be printed with different portions of the reference mark extending along different parts of the guiding structure. By the specific portions being off-set in opposite directions along the axis of carriage motion for the first reference mark and the second reference mark, the first reference mark and the second reference mark can furthermore be printed with each reference mark extending along the same two parts of the guiding structure with relatively little chance of dot sequences of the two reference marks overlapping. This enables a first reference mark and a second reference mark to be printed such that each reference mark is to the same extent influenced by a certain imperfection present in the guidance. As a result, in determining a distance based on a relative position of two reference marks, any influence of such an imperfection on the position of any part of a reference mark is cancelled out, and any determined distance, such as the advance of a recording medium, is relatively accurate.

BRIEF DESCRIPTION OF DRAWINGS

[0014] Other objects, features, and advantages of the present invention will become more apparent from the following detailed description when read in conjunction with the accompanying drawings, in which:

Figure 1a shows a schematic perspective view of a scanning-type printer comprising a carriage arranged to move relative to a recording medium along an axis of carriage motion, a guiding structure for guiding the carriage while the carriage is moving, and a roller for driving a recording medium to move relative to the guiding structure along an axis of medium advance normal to the axis of carriage motion;

Figure 1b shows a schematic bottom view of a carriage carrying a plurality of print heads, each print head having a nozzle array, the carriage further carrying an optical scanner;

Figures 2a to 2d schematically show pairs of reference marks as included in consecutive swaths of printed information in a known method for measuring medium advance in a printer;

Figures 3a to 3d schematically show pairs of reference marks as included in consecutive swaths of printed information in a method for measuring medium advance in a printer according to the invention.

DETAILED DESCRIPTION OF EMBODIMENTS

[0015] With reference to Figures 1a and 1b, a scanning-type inkjet printer 100 comprises a plurality of inkjet print heads 110, 120, 130, 140 mounted on a print head carriage 150 arranged to move relative to a recording medium 200 along an axis of carriage motion Y while being guided by a guiding structure 160.

[0016] The printer 100 comprises a driving roller 170 for driving the recording medium 200 to move relative to the guiding structure 160 along an axis of medium advance X normal to the axis of carriage motion Y.

[0017] Each print head 110, 120, 130, 140 has an array 111, 121, 131, 141 of jetting nozzles 180 for jetting out droplets of ink, each nozzle array 111, 121, 131, 141 oriented along the axis of medium advance X.

[0018] The carriage 150 carries a scanner 190 having a field of view 191 extending along the axis of medium advance X.

[0019] In operation, a swath of information is printed onto the recording medium 200 by jetting nozzles 180 of the print heads 110, 120, 130, 140 ejecting sequences of ink droplets towards the recording medium 200 while the carriage 150 is moving along the axis of carriage motion Y.

[0020] In between consecutive swaths, the recording medium 200 is moved along the axis of medium advance X by the driving roller 170, so that multiple swaths of information can be printed side by side on the recording medium 200.

[0021] Each time when the recording medium 200 moves relative to the guiding structure 160, the advance of the recording medium 200 is measured, and compared to an advance as expected based on a prescribed motion of the driving roller 170.

[0022] For measuring the medium advance, two reference marks printed with different sub-arrays of jetting nozzles 180 within the same one nozzle array 111, 121, 131, 141 are included in each swath of printed information, and a first reference mark and a second reference mark as included in different swaths of printed information are scanned by the scanner 190 to determine their relative position along the axis of medium advance X once the pair of reference marks, by transport of the recording medium 200, has reached an area which is covered by the field of view 191 of the scanner 190 during a certain pass of the carriage 150 relative to the recording medium 200.

[0023] With reference to Figures 2a to 2d, in a method for measuring medium advance according to the prior art, in every swath of information S_i printed, a reference mark assembly $50a^i$, $50b^i$ is included, comprising one reference mark $50a^i$ and another reference mark $50b^i$.

[0024] Each reference mark $50a^i$, $50b^i$ comprises an array 51a, 51b of individually recognizable dot sequences 53a, 53b each printed with an individual nozzle 180 of a specific nozzle array 111, 121, 131, 141 used for printing the reference mark assembly $50a^i$, $50b^i$. Each dot sequence 53a, 53b extends along the axis of carriage motion Y, the different dot sequences 53a, 53b spaced apart along the axis of medium advance X.

[0025] The one reference mark $50a^i$ and the other reference mark $50b^i$ are each printed using a different one of two sub-arrays of jetting nozzles 180 spaced apart within the nozzle array 111, 121, 131, 141 used for printing the reference mark assembly $50a^i$, $50b^i$, resulting in the reference marks $50a^i$, $50b^i$ to be printed at a mutual distance dX along the axis of medium advance X.

[0026] By appropriate control of the print head 110, 120, 130, 140 comprising the respective nozzle array 111, 121, 131, 141, the reference marks $50a^i$, $50b^i$ within a certain reference mark assembly $50a^i$, $50b^i$ furthermore are printed at a mutual distance dY along the axis of carriage motion Y.

[0027] As a result of the distances dX, dY between the reference marks $50a^i$, $50b^i$ within a certain reference mark assembly $50a^i$, $50b^i$, and as illustrated by the reference mark assemblies $50a^1$, $50b^1$; $50a^2$, $50b^2$; $50a^3$, $50b^3$; $50a^4$, $50b^4$ included in consecutive swaths of printed information S_1 to S_4 shown in Figures 2a to 2d, after a certain number of swaths printed (four, in the shown example), the one reference mark $50a^4$ as included in a later swath S_4 is printed in the vicinity of the other reference mark $50b^1$ as included in an earlier swath S_1 (see Figure 2d). This allows the two reference marks $50a^4$, $50b^1$ to be scanned by the scanner 190 in the same one pass of the carriage 150 relative to the recording medium 200, such that the relative position along the axis of medium advance X of the two reference marks $50a^4$, $50b^1$ can be checked, and the advance made by the medium 200 in between the printing of the earlier swath S_1 and the printing of the later swath S_4 can be determined.

[0028] With reference to Figures 3a to 3d, in an embodiment of a method for measuring medium advance according to the invention, again, in every swath of information S_i printed, a reference mark assembly $60a^i$, $60b^i$ is included, comprising one reference mark $60a^i$ and another reference mark $60b^i$.

[0029] Each reference mark $60a^i$, $60b^i$ again comprises a set 61a, 62a; 61b, 62b of individually recognizable dot sequences 63a, 63b each printed with an individual nozzle 180 of a specific nozzle array 111, 121, 131, 141 used for printing the reference mark assembly $60a^i$, $60b^i$. Each dot sequence 63a, 63b again extends along the axis of carriage motion Y, the different dot sequences 63a, 63b spaced apart along the axis of medium advance X.

[0030] Rather than a single array of dot sequences printed at a certain position along the axis of carriage motion Y, each reference mark $60a^i$, $60b^i$ in this case comprises two arrays 61a, 62a; 61b, 62b each of at least two dot sequences 63a; 63b, which arrays 61a, 62a; 61b, 62b, by appropriate control of the print head 110, 120, 130, 140 comprising the respective nozzle array 111, 121, 131, 141, are printed at a mutual distance dY along the axis of carriage motion Y.

[0031] The respective arrays 61a, 62a; 61b, 62b are off-set in opposite directions along the axis of carriage motion Y for the one reference mark $60a^i$ and the other reference mark $60b^i$. An array 61a located at a specific end of the one reference mark $60a^i$, such as the front end or the back end of the one reference mark $60a^i$ when seen along the axis of medium advance X, is off-set in a certain direction along the axis of carriage motion Y with respect to the other array 62a of the one reference mark $60a^i$. An array 61b located at a corresponding end of the other reference mark $60b^i$, meaning also the front end or the back end of the other reference mark $60b^i$ when seen along the axis of medium advance X, respectively, is off-set in the opposite direction with respect to the other array 62b of the other reference mark $60b^i$.

[0032] Again, the one reference mark $60a^i$ and the other reference mark $60b^i$ are each printed using a different one of two sub-arrays of jetting nozzles 180 spaced apart within the nozzle array 111, 121, 131, 141 used for printing the reference mark assembly $60a^i$, $60b^i$, resulting in the two reference marks $60a^i$, $60b^i$ to be printed at a mutual distance dX along the axis of medium advance X.

[0033] By appropriate control of the print head 110, 120, 130, 140 comprising the respective nozzle array 111, 121, 131, 141, the two reference marks $60a^i$, 60b'within a certain reference mark assembly $60a^i$, $60b^i$ in this case are printed at the same position along the axis of carriage motion Y.

[0034] As a result of the distance dX along the axis of medium advance X between the reference marks $60a^i$,

$60b^i$ included in a reference mark assembly $60a^i$, $60b^i$, and as illustrated by the reference mark assemblies $60a^1$, $60b^1$; $60a^2$, $60b^2$; $60a^3$, $60b^3$; $60a^4$, $60b^4$ included in consecutive swaths of printed information S_1 to S_4 shown in Figures 3a to 3d, after a certain number of swaths printed (four, in the shown example), the one reference mark $60a^4$ as included in a later swath S_4 is printed at around the same position along the axis of medium advance X as the other reference mark $60b^1$ as included in an earlier swath S_1 (see Figure 3d). This allows the two reference marks $60a^4$, $60b^1$ to be scanned by the scanner 190 in the same one pass of the carriage 150 relative to the recording medium 200, such that the relative position along the axis of medium advance X of the two reference marks $60a^4$, $60b^1$ can be checked, and the advance made by the medium 200 in between the printing of the earlier swath S_1 and the printing of the later swath S_4 can be determined.

[0035] As a result of the distance dY along the axis of carriage motion Y between the two arrays 61a, 62a; 61b, 62b of dot sequences 63a, 63b within each reference mark $60a^i$, $60b^i$ included in a reference mark assembly $60a^i$, $60b^i$, wherein the respective arrays 61a, 62a; 61b, 62b are off-set in opposite directions along the axis of carriage motion Y for the one reference mark $60a^i$ and the other reference mark $60b^i$, when the one reference mark $60a^4$ as included in a later swath S_4 is printed at around the same position along the axis of medium advance X as the other reference mark $60b^1$ as included in an earlier swath S_1, each reference mark $60a^4$, $60b^1$ extends along the same two parts of the guiding structure 160 with relatively little chance of dot sequences of the two reference marks $60a^4$, $60b^1$ overlapping.

[0036] Having the one reference mark $60a^4$ as included in a later swath S_4 and the other reference mark $60b^1$ as included in an earlier swath S_1 extend along the same two parts of the guiding structure 160 provides for the two reference marks $60a^4$, $60b^1$ to be influenced to the same extent by a certain imperfection present in the guidance provided by the guiding structure 160. As a result, any influence of such an imperfection on the position of any of the arrays 61a, 62a; 61b, 62b of dot sequences 63a, 63b included in the two reference marks $60a^4$, $60b^1$ is cancelled out, when, based on a relative position of the two reference marks $60a^4$, $60b^1$, the advance of the medium 200 is measured, or another distance is determined in the printer 100.

[0037] A relative position of two reference marks $60a^4$, $60b^1$ along the axis of medium advance X can be determined by averaging the positions along the axis of medium advance X of all dots within a dot sequence 63a, 63b; then determining a center of a reference mark $60a^4$, $60b^1$ along the axis of medium advance X based on the average positions of all dot sequences 63a, 63b within the reference mark $60a^4$, $60b^1$, and then comparing the centers of the two reference marks $60a^4$, $60b^1$.

[0038] A method as described may also be used for determining a print-process related distance other than the advance of a recording medium 200. Such a distance could include any distance along the axis of medium advance X measurable via the printing and scanning of a pair of reference marks, such as a difference in position along said axis X of a first and a second print head within a print head carriage, or a distance of travel of a guiding structure moving relative to a supporting table for supporting a stationary recording medium.

[0039] It is noted that for measuring a distance using the described method, different reference marks $60a^i$, $60b^i$ need not necessarily be printed using different groups of nozzles 180 within one and the same array 111, 121, 131, 141 of nozzles 180. The principle also works with groups of nozzles 180 of different nozzle arrays 111, 121, 131, 141, or of different print heads 110, 120, 130, 140.

[0040] For sake of completeness, it is noted that a reference mark $60a^i$, $60b^i$ or a portion 61a, 61b; 62a, 62b of a reference mark $60a^i$, $60b^i$ printed at a certain position along a certain axis X, Y is centered about that certain position along said certain axis X, Y.

[0041] Each one of different arrays 61a, 62a; 61b, 62b of dot sequences 63a; 63b within a reference mark $60a^i$, $60b^i$, printed at a mutual distance dY along the axis of carriage motion Y, preferably comprises at least two dot sequences 63a; 63b to enable at least some of the dot sequences 63a; 63b of the respective arrays 61a, 62a; 61b, 62b to still be individually recognizable by an optical scanner 190 in case the arrays 61a, 62a; 61b, 62b of different reference marks $60b^1$, $60a^4$ printed at around the same position are printed overlapping to some extent along the axis of medium advance X for a certain amount of medium advance.

[0042] Each of the dot sequences 63a, 63b within a reference mark $60a^i$, $60b^i$ may be printed to comprise a unique recognizable code, so that each dot sequence 63a, 63b within a reference mark $60a^i$, $60b^i$ can be distinguished from the other dot sequences 63a, 63b, in order to account for dot sequences 63a, 63b that are overlapping, or missing in case of a nozzle failure. Then, in a respective case, the measuring of a distance can still proceed based on a determined position of the remaining dot sequences 63a, 63b.

[0043] Each one of two arrays 61a, 62a; 61b, 62b of dot sequences 63a; 63b within each reference mark $60a^i$, $60b^i$ may comprise half the set of all dot sequences 63a, 63b within the reference mark $60a^i$, $60b^i$, so that each one of different reference marks $60b^1$, $60a^4$ is to the same extent influenced by certain imperfections in the guidance.

[0044] Different arrays 61a, 62a; 61b, 62b of dot sequences 63a; 63b within a reference mark $60a^i$, $60b^i$, printed at a mutual distance dY along the axis of carriage motion Y, may also be printed at a mutual distance along the axis of medium of advance X which is larger than the distance in between individual dot sequences, to decrease the chance of overlap at a certain amount of medium advance between arrays 61a, 62a; 61b, 62b of dif-

ferent reference marks $60b^1$, $60a^4$ printed at the same position along the axis of carriage motion Y. The larger distance could be obtained by skipping one or more nozzles 180 in a certain sub-array of nozzles 180 when printing a reference mark $60a^i$, $60b^i$ with such a sub-array.

[0045] Whether the different dot sequences 63a; 63b within a reference mark $60a^i$, $60b^i$ are individually recognizable is noted to depend on the distance between the individual dot sequences 63a; 63b. Preferably, neighboring dot sequences 63a; 63b within a reference mark $60a^i$, $60b^i$ are arranged at such a distance, that no other dot sequence 63a; 63b would fit in between. This allows a relatively large number of dot sequences 63a; 63b to fit in the field of view 191 of an optical scanner 190, which provides for a relatively accurate measurement of a position of a reference mark $60a^i$, $60b^i$ along the axis of medium advance X.

[0046] Preferably, the number of dot sequences 63a; 63b within a reference mark $60a^i$, $60b^i$ equals at least the number of dot sequences 53a; 53b of previously known reference marks $50a^i$, $50b^i$ (eight, for the embodiment shown in Figures 2a-2d), so that at least a same degree of accuracy can be obtained as with known methods for a given size of a field of view 191 of an optical scanner 190.

[0047] It is to be understood that the disclosed embodiments are merely exemplary of the invention, which can be embodied in various forms. Specific structural and functional details are not to be interpreted as limiting, but merely as a basis for the claims and as a teaching for one skilled in the art to variously employ the present invention in virtually any appropriately detailed structure. In particular, features presented and described in separate dependent claims may be applied in combination, and any advantageous combination of such claims is herewith disclosed.

[0048] The invention being thus described, it will be obvious that the same may be varied in many ways. Such variations are not to be regarded as a departure from the spirit and scope of the invention, and all such modifications as would be obvious to one skilled in the art are intended to be included within the scope of the following claims.

Claims

1. Method for determining a distance in a printer (100) comprising one or more print heads (110, 120, 130, 140) mounted on a carriage (150) arranged to move relative to a recording medium (200) along an axis of carriage motion (Y), the one or more print heads (110, 120, 130, 140) having at least one array (111, 121, 131, 141) of printing elements (180), wherein a swath of information (S_1, S_2, S_3, S_4) can be printed onto a recording medium (200) by an array (111, 121, 131, 141) of printing elements (180) of a print head (110, 120, 130, 140) printing information onto the recording medium (200) while the carriage (150) is moving, the method comprising the steps of:

   - including in a first swath of printed information (S_1) a first reference mark ($60b^1$) printed with one array (111, 121, 131, 141) of printing elements (180);
   - including in a second swath of printed information (S_4) a second reference mark ($60a^4$) printed with the one array (111, 121, 131, 141) of printing elements (180), and
   - determining a relative position of the two reference marks ($60b^1$, $60a^4$), **characterized by** the step of printing specific portions (61a, 62a; 61b, 62b) of each reference mark ($60b^1$, $60a^4$) at a mutual distance (dY) along the axis of carriage motion (Y), wherein the specific portions (61a, 61b; 62a, 62b) are off-set in opposite directions along the axis of carriage motion (Y) for the first reference mark ($60b^1$) and the second reference mark ($60a^4$).

2. Method according to claim 1, wherein each reference mark ($60b^1$, $60a^4$) comprises a set (61a, 62a; 61b, 62b) of individually recognizable dot sequences (63a, 63b) spaced apart along a certain axis (X), wherein each specific portion (61a, 62a; 61b, 62b) of a reference mark ($60b^1$, $60a^4$) comprises an array (61a, 62a, 61b, 62b) of at least two dot sequences (63a; 63b) consecutively arranged along said axis (X).

3. Method according to claim 1 or 2, wherein each reference mark ($60b^1$, $60a^4$) comprises a set (61a, 62a; 61b, 62b) of individually recognizable dot sequences (63a, 63b) spaced apart along a certain axis (X), wherein each specific portion (61a, 62a; 61b, 62b) of a reference mark ($60b^1$, $60a^4$) comprises half the set of all dot sequences (63a, 63b) within the reference mark ($60b^1$, $60a^4$).

4. Method according to one of the preceding claims, wherein each reference mark ($60b^1$, $60a^4$) comprises a set (61a, 62a; 61b, 62b) of individually recognizable dot sequences (63a, 63b) spaced apart along a certain axis (X), wherein the specific portions (61a, 62a; 61b, 62b) of each reference mark ($60b^1$, $60a^4$) are printed at a mutual distance along said axis (X) larger than the distance in between individual dot sequences (63a, 63b) along said axis (X).

5. Method for measuring medium advance in a printer (100), wherein the medium advance is determined using a method according to one of the preceding claims.

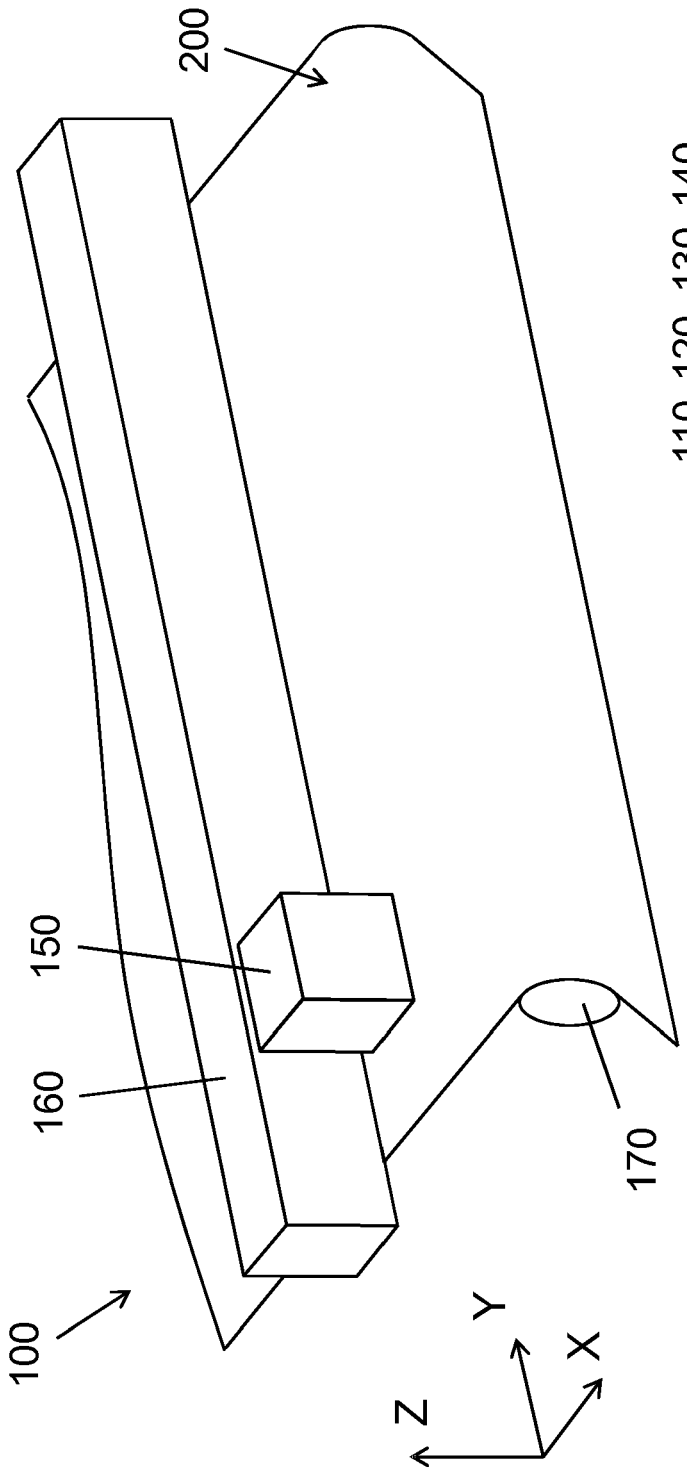
200
150
160
100
170
Z
Y
X

Fig. 1a

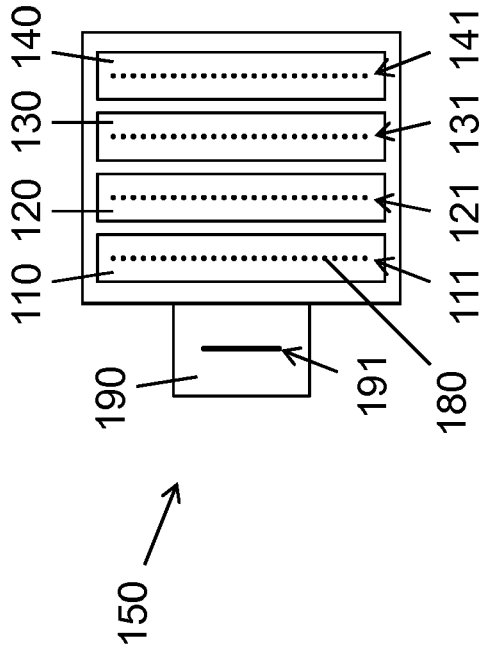
110
120
130
140
111
121
131
141
190
191
180
150

Fig. 1b

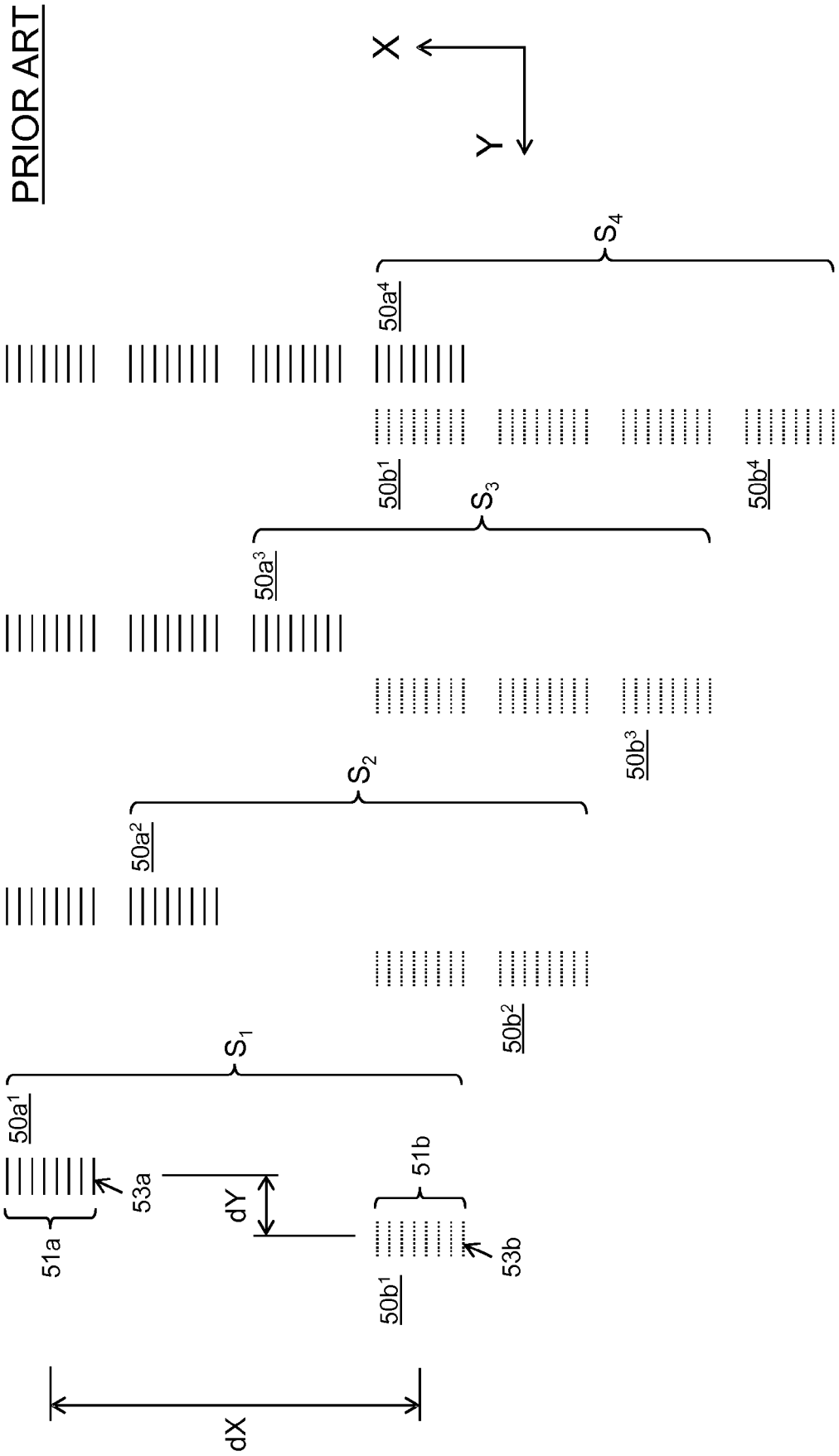

Fig. 2a

Fig. 2b

Fig. 2c

Fig. 2d

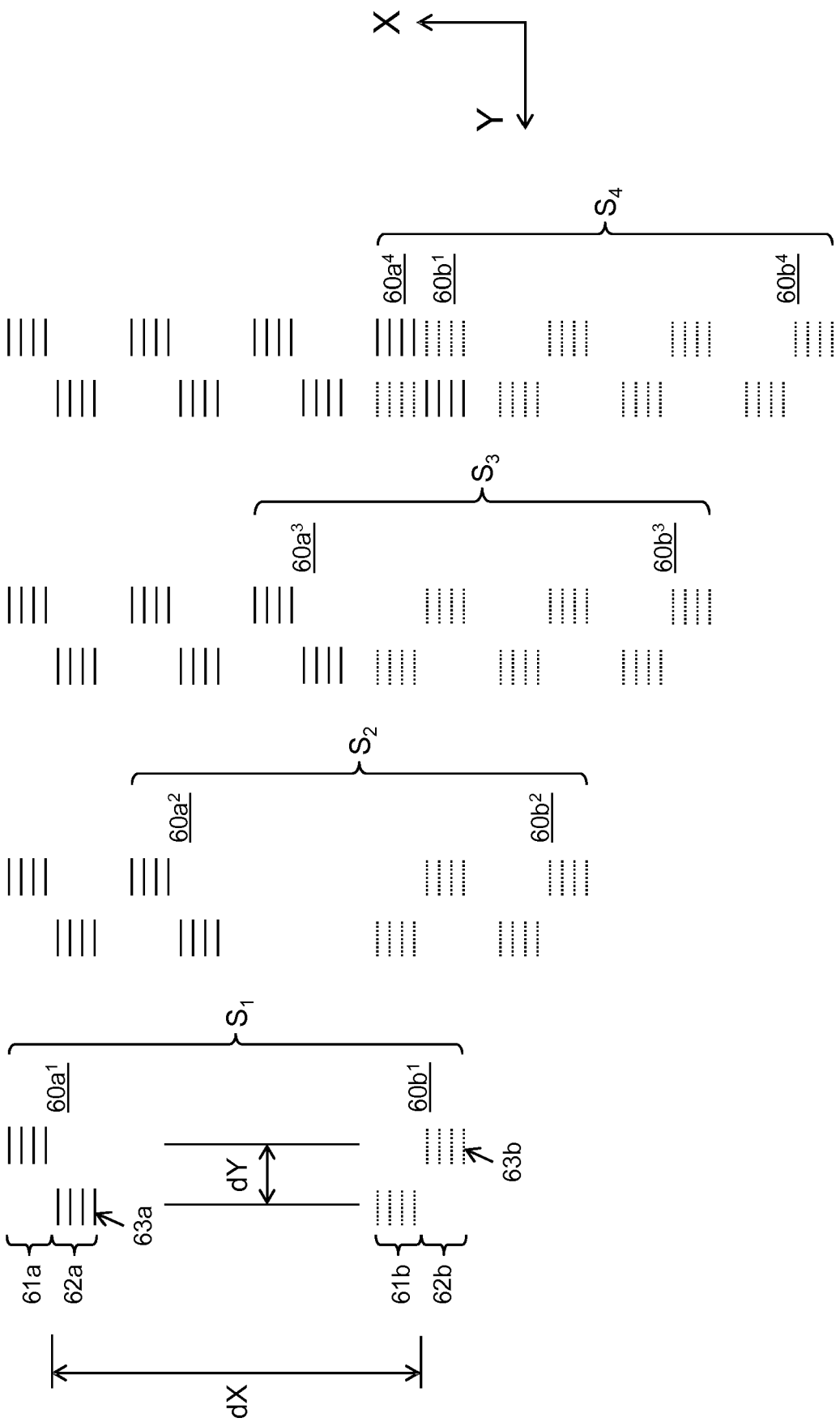

Fig. 3a

Fig. 3b

Fig. 3c

Fig. 3d

Europäisches Patentamt
European Patent Office
Office européen des brevets

EUROPEAN SEARCH REPORT

Application Number
EP 18 18 0765

DOCUMENTS CONSIDERED TO BE RELEVANT

Category	Citation of document with indication, where appropriate, of relevant passages	Relevant to claim	CLASSIFICATION OF THE APPLICATION (IPC)
X	US 2016/089883 A1 (YOKOTA SO [JP]) 31 March 2016 (2016-03-31) * paragraph [0067] - paragraph [0087]; figures 5-8 * * paragraph [0125]; figures 14A-14C * -----	1-5	INV. B41J11/46 B41J13/00 B41J19/14 B41J29/393
X	EP 3 323 619 A1 (RICOH CO LTD [JP]) 23 May 2018 (2018-05-23) * paragraph [0122] - paragraph [0130] * -----	1-4	
A	EP 2 960 062 A1 (OCE TECH BV [NL]) 30 December 2015 (2015-12-30) * paragraph [0017]; figure 3 * -----	1-5	
A	US 2017/072715 A1 (YOKOTA SO [JP] ET AL) 16 March 2017 (2017-03-16) * the whole document * -----	1-5	
A	US 2002/130915 A1 (IZUMI KEIJI [JP] ET AL) 19 September 2002 (2002-09-19) * the whole document * -----	1-5	

TECHNICAL FIELDS SEARCHED (IPC)

B41J

The present search report has been drawn up for all claims

Place of search	Date of completion of the search	Examiner
The Hague	19 December 2018	Curt, Denis

CATEGORY OF CITED DOCUMENTS

X : particularly relevant if taken alone
Y : particularly relevant if combined with another document of the same category
A : technological background
O : non-written disclosure
P : intermediate document

T : theory or principle underlying the invention
E : earlier patent document, but published on, or after the filing date
D : document cited in the application
L : document cited for other reasons
.....
& : member of the same patent family, corresponding document

1

EPO FORM 1503 03.82 (P04C01)

ANNEX TO THE EUROPEAN SEARCH REPORT ON EUROPEAN PATENT APPLICATION NO. EP 18 18 0765

This annex lists the patent family members relating to the patent documents cited in the above-mentioned European search report.
The members are as contained in the European Patent Office EDP file on
The European Patent Office is in no way liable for these particulars which are merely given for the purpose of information.

19-12-2018

Patent document cited in search report	Publication date	Patent family member(s)	Publication date
US 2016089883 A1	31-03-2016	CN 105459633 A	06-04-2016
		EP 3056345 A2	17-08-2016
		JP 6399298 B2	03-10-2018
		JP 2016064622 A	28-04-2016
		US 2016089883 A1	31-03-2016
EP 3323619 A1	23-05-2018	EP 3323619 A1	23-05-2018
		US 2018141329 A1	24-05-2018
EP 2960062 A1	30-12-2015	EP 2960062 A1	30-12-2015
		US 2015375537 A1	31-12-2015
US 2017072715 A1	16-03-2017	CN 107009763 A	04-08-2017
		JP 2017052240 A	16-03-2017
		US 2017072715 A1	16-03-2017
US 2002130915 A1	19-09-2002	JP 2002273956 A	25-09-2002
		US 2002130915 A1	19-09-2002

EPO FORM P0459

For more details about this annex : see Official Journal of the European Patent Office, No. 12/82