A. E. DICKSON.

MAIL DELIVERING AND RECEIVING APPARATUS.

APPLICATION FILED DEC. 20, 1912.

1,068,988.

Patented July 29, 1913.

3 SHEETS—SHEET 1.

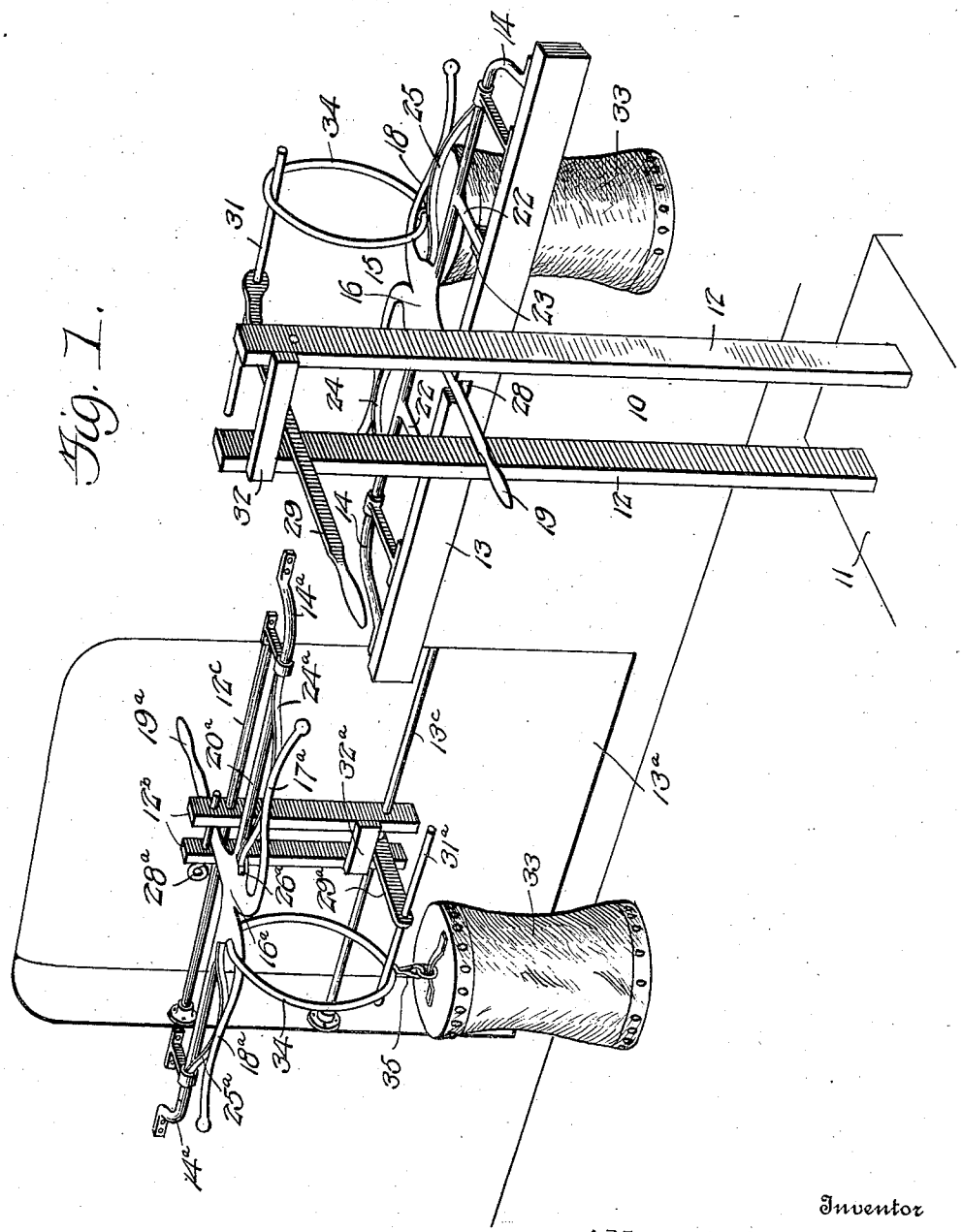

Fig. 1.

Witnesses

Hugh H. Ott

H. A. Hosler

Inventor

Albert E. Dickson

By Victor J. Evans

Attorney

COLUMBIA PLANOGRAPH CO., WASHINGTON, D. C.

A. E. DICKSON.

MAIL DELIVERING AND RECEIVING APPARATUS.

APPLICATION FILED DEC. 20, 1912.

1,068,988.

Patented July 29, 1913.

3 SHEETS—SHEET 2.

Fig. 2.

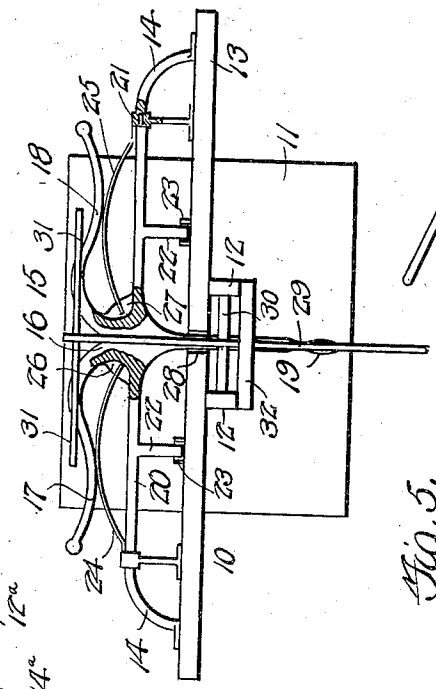

Fig. 5.

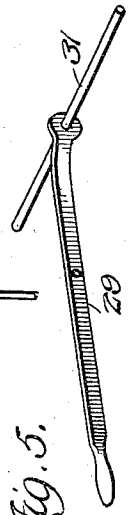

Fig. 6.

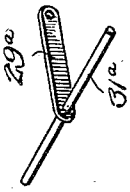

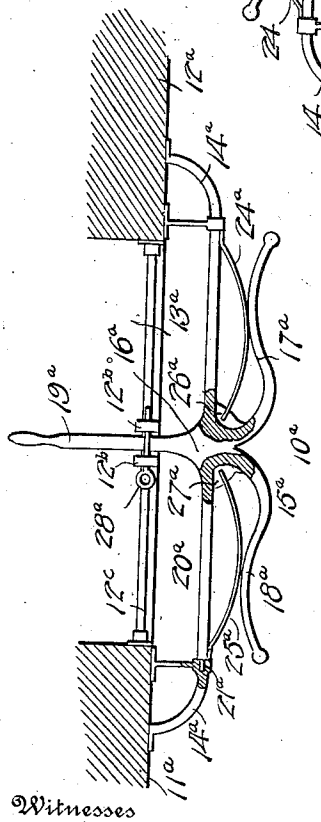

Fig. 7.

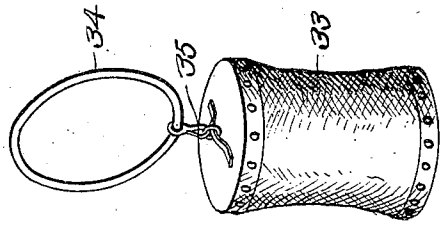

Witnesses

Hugh D. Scott

A. H. Hooker

Inventor

Albert E. Dickson

By Victor J. Evans

Attorney

COLUMBIA PLANOGRAPH CO., WASHINGTON, D. C.

A. E. DICKSON.

MAIL DELIVERING AND RECEIVING APPARATUS.

APPLICATION FILED DEC. 20, 1912.

1,068,988. Patented July 29, 1913.

3 SHEETS—SHEET 3.

Fig. 4.

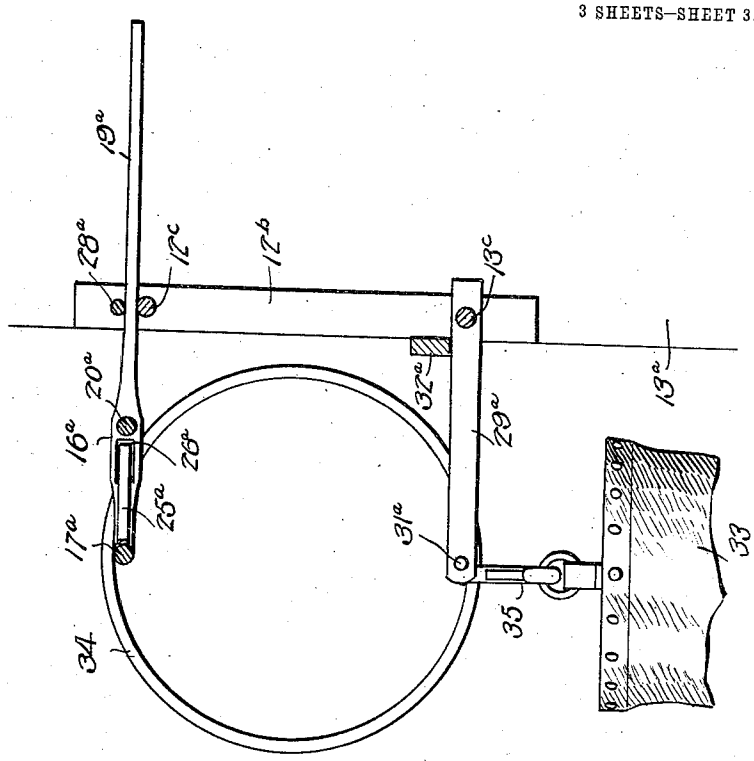

Fig. 3.

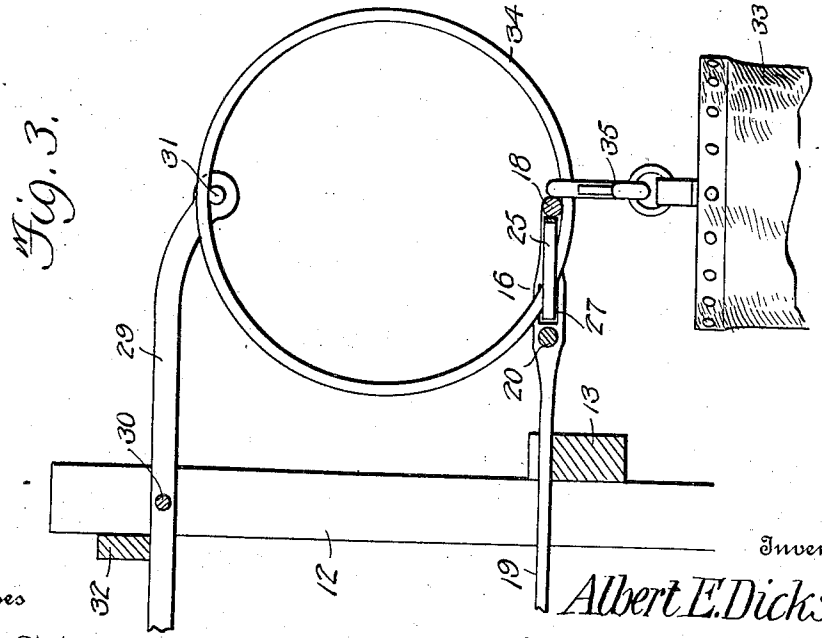

Witnesses

Hugh H. Ott

P. N. Hoster

Inventor

Albert E. Dickson

By Victor J. Evans

Attorney

COLUMBIA PLANOGRAPH CO., WASHINGTON, D. C.

UNITED STATES PATENT OFFICE.

ALBERT E. DICKSON, OF HANNIBAL, MISSOURI.

MAIL DELIVERING AND RECEIVING APPARATUS.

1,068,988. Specification of Letters Patent. Patented July 29, 1913.

Application filed December 20, 1912. Serial No. 737,887.

To all whom it may concern:

Be it known that I, ALBERT E. DICKSON, a citizen of the United States, residing at Hannibal, in the county of Marion and State of Missouri, have invented new and useful Improvements in Mail Delivering and Receiving Apparatus, of which the following is a specification.

The invention relates to mail delivering and receiving apparatus and has for an object to provide an apparatus for delivering mail from a stationary point to a moving train and vice versa.

The invention embodies among other features a station member and a train member the said members being arranged so that when the train passes the station member the train member on the train will pass adjacent to the station member to receive a bag of mail from the station member and also deliver a bag of mail thereto.

In the further disclosure of the invention reference is to be had to the accompanying drawings constituting a part of this specification, in which similar characters of reference denote corresponding parts in all of the views, and in which,

Figure 1 is a perspective view of the station member and train member showing same in applied position. Fig. 2 is a plan view of the structure disclosed in Fig. 1. Fig. 3 is a vertical transverse sectional view taken through the station member, showing same in operative position. Fig. 4 is a vertical sectional view taken through the train member showing same in operative position. Fig. 5 is a perspective view of the supporting lever of the station member. Fig. 6 is a perspective view of the support lever of the train member, and Fig. 7 is a perspective view of the mail bag and ring.

Referring more particularly to the views, I employ a station member 10 including a platform 11 provided with a plurality of spaced uprights 12 having arranged thereon a horizontal cross piece 13 having brackets 14 secured to the ends thereof, a fork member 15 being mounted to swing on the brackets 14 and lying between the same. The fork member 15 is preferably formed or cast of a single piece of material that includes a head 16 oppositely diverging forks 17 and 18, a rearwardly extending handle 19 and a horizontally extending shaft 20 having the ends thereof terminating in studs 21 journaled in the brackets 14 thus permitting the fork member 15 to swing on the brackets, bars 22 being formed with the shaft 20 and extending rearwardly toward the cross piece 13 to repose in shelves 23 secured to the cross piece thus limiting the upward swinging movement of the fork member 15. The forks 17, 18 are bent inwardly at their medial portions and secured to the extremities of the shaft 20 are flat springs 24, 25 bent outwardly at their medial portions to engage the inwardly bent portions of the forks 17, 18 respectively, the free ends of the springs 24 25 being adapted to operate in grooves 26, 27, formed in the head 16 of the fork member 15. A notch 28 is formed in the cross piece 13 and is adapted to receive therein the free end of the handle 19 when the fork member 15 is swung into operative position, thus further limiting the upward swinging movement of the fork member.

A supporting lever 29 is mounted to swing on a pin 30 supported on the uprights 12 and lying between the same, the forward end of the supporting lever 29 being curved and terminating in a laterally extending pin 31, projecting from both sides of the supporting lever 29 as shown, the downward swinging movement of the forward end of the supporting member being limited by a cross piece 32 secured to the uprights 12 above the point of pivotal connection of the supporting lever with the uprights for a purpose which will be hereinafter more fully disclosed.

A train member 10^a is provided, the said train member being somewhat similar in construction to the station member 10 and adapted for connection with a side 11^a of a car 12^a provided with a doorway 13^a. Brackets 14^a are secured to the side 11^a of the car 12^a and a fork member 15^a similar to the fork member 15 is mounted to swing on the brackets 14^a, the said fork member 15^a being preferably formed or cast of a single piece of material and including a head 16^a, oppositely diverging forks 17^a, 18^a, a rearwardly extending handle 19^a and a horizontally extending shaft 20^a terminating at the ends thereof in studs 21^a journaled in the brackets 14^a thus permitting the fork member 15^a to swing on the brackets 14^a, rearwardly extending bars 22^a being formed with the shaft 20^a and adapted to engage and seat in shelves 23^a secured to the sides 11^a of the car. The medial portions of the forks 17^a, 18^a are bent rearwardly and secured to the extremities of

the shaft 20^a are flat springs 24^a, 25^a having their medial portions bent forwardly to engage the inwardly bent portions of the forks 17^a, 18^a, one of the flat springs being provided for each of the respective forks 17^a, 18^a with the free ends of the springs operable in grooves 26^a, 27^a formed in the head 16^a of the fork member 15^a. Spaced uprights 12^b are supported on spaced cross shafts 12^c, 13^c, the said uprights 12^b being similar to the uprights 12 and a locking pin 28^a is mounted on the upper ends of the uprights 12^b and adapted to engage the handle 19^a to lock same to the uprights and secure the fork member 15^a in operative position, it being readily understood that when the handle 19^a is released that the uprights 12^b, the fork member 15^a will swing downwardly and lie in a vertical position adjacent the sides 11^a of the car.

Mounted to swing on the lower cross shaft 13^c is a supporting lever 29^a bent slightly upward at its forward end and having a laterally extending pin 31^a at the forward extremity thereof, the said pin being arranged to project from both sides of the supporting lever 29^a as shown. A cross piece 32^a, similar to the cross piece 32 being arranged to connect the uprights 12^b and adapted to be engaged by the supporting lever 29^a to limit the upward swinging movement thereof, thus forming stop members for the supporting lever.

The mail bag employed in connection with the station member 10 and train member 10^a comprises a pouch 33 and a ring 34 having removable connection with the pouch 33 by means of suitable snaffle hooks 35, the ring 34 being provided to support the pouch 33 in receiving or delivering position on either the station member 10 or train member 10^a as will be hereinafter more fully disclosed.

Now assuming that the car 12^a is approaching the station member 10 from the direction in which the fork 18 of the fork member 15 extends, and it is desirable to deliver a mail bag from the station member to the train member, the fork member 15 is first swung into operative position so that the fork member will lie substantially in horizontal plane relatively to the shaft 20, and the ring 34 of the mail bag is received on the fork 17, after which the forward end of the supporting lever 29 is swung downwardly so that one end of the pin 30 thereof will receive the ring 34 of the mail bag it being thus seen that the ring of the mail bag will then connect the pin 30 with the fork 17 so as to hold the mail bag and ring in delivering position, while at the same time the supporting lever 29 when arranged as mentioned will support the fork member 15 in operative position, the downward swinging movement of the forward end of the supporting lever 29 being limited by the cross piece 32 on the uprights 12 as mentioned heretofore. In a similar manner the train member 10^a is arranged in operative position by swinging the fork member 15^a upwardly and securing the handle 19^a thereon by means of the pin 28 on the uprights 12^b thus locking the fork member 15^a in operative position. A mail bag is now received on the fork 17^a of the fork member 15^a and the forward end of the supporting lever 29 is then swung upwardly so that the pin 31^a thereof will engage the ring of the mail bag, thus holding the mail bag and ring in delivering position. Now referring to the views it will be seen that in this instance the forks 18 and 18^a will constitute the receiving members whereas the forks 17 and 17^a constitute the delivering members. As the train member 10^a passes the station member 10, the fork 18^a will pass through the ring of the mail bag supported on the station member 10 and will remove the mail bag therefrom so that the same will be received upon the fork 18^a. Simultaneously the fork 18 of the station member 10 will receive the ring of the mail bag on the fork 17^a of the train member 10^a, thus it will be seen that the mail bag of the station member has been transferred to the train member and conversely the mail bag of the train member has been transferred to the station member. Now at the moment that the mail bag on the station member is moved therefrom by the fork 18^a of the train member the ring of the mail bag will be disengaged from the pin 31 of the supporting lever 29 and will also be disengaged from the fork 17, thus breaking the connection between the supporting lever 29 and the fork member 15 so as to permit the fork member to gravitate into inoperative position while at the same time the supporting lever 29 will also return to initial position. Similarly the supporting lever 29^a, when the ring of the mail bag which it engages is disengaged therefrom will also gravitate into inoperative position, by providing the springs 24, 25 on the station member 10 and the spring 24^a, 25^a on the train member 10^a, the mail bags will be held on the respective forks thereof and prevented from accidentally jarring or sliding out of engagement with the forks prior to the transferring of the mail bags or after the mail bags have been transferred, it being thus seen that the said springs constitute locking members for locking the mail bags on the forks upon which they are received. When the transferring operation has been completed, the pin 28^a can be removed from the uprights 12^b of the train member 10^a thus disengaging the handle 19^a and permitting the fork

member 15ª to gravitate into inoperative position and lie in a vertical plane parallel to the side 11ª of the car 12ª. It will be further seen that when this has been accomplished the handle 19ª will lie out of the plane of the doorway 13ª in the side 11ª of the car so that the usual sliding door mounted on mail cars can be conveniently closed without interfering with the train member 10ª supported on the side 11ª of the car.

From the foregoing description it will thus be seen that in the use of the device of the character described a simultaneous delivering and receiving of mail bags takes place, one mail bag being transferred from a moving train to the stationary member while at the same time a bag of mail will be transferred from stationary member to a moving train, the entire operation being accomplished in the moment of time in which the train member 10ª passes the station member 10, after which, the fork member 15 and supporting lever 29 of the station member 10 will automatically return to initial position and the supporting member 29ª of the train member 10ª will also return to initial position, the fork member 15ª of the train member 10ª being retained in locked position by the pin 28ª as mentioned heretofore. If desirable however the fork member 15ª can also be arranged to automatically be released from operative position when the transferring operation has been completed and it will be understood that although for the purpose of describing my invention I have shown a particular construction thereof in the drawings of this application I do not limit myself to the particular construction disclosed, the scope of the invention being defined by the appended claims.

Having thus described the invention, what is claimed as new, is:—

1. In a device of the class described, the combination with a supporting member, of a fork member mounted to swing thereon, the said fork member comprising a shaft oppositely diverging forks extending from the shaft, and a handle projecting from the shaft and adapted to engage the supporting member, bars projecting from the said shaft, shelves on the said supporting member and adapted to receive said bars to limit the swinging movement of the fork member and springs secured to said shaft and having medial portions thereof engaging the forks of the said fork member with the free ends of the springs slidable in grooves formed in the said fork member.

2. In a device of the class described, the combination with a supporting member, of a fork member mounted to swing thereon and comprising a shaft journaled on the supporting member, forks projecting from the said shaft and extending in opposite directions therefrom, a mail bag, a ring on the said mail bag and adapted to be received on one of the said forks and springs on the said shaft and engaging the forks to retain the mail bags thereon, a supporting lever mounted to swing on said supporting member and adapted to engage the ring of the mail bag to retain the mail bag in delivering position on the said fork and the cross piece of the supporting member and adapted to be engaged by said supporting lever to limit the swinging movement of the supporting lever.

3. In a device of the class described, the combination with a supporting member, of a fork member mounted to swing thereon and comprising a shaft journaled on the supporting member, forks projecting from the said shaft and extending in opposite directions therefrom, a mail bag, a ring on the said mail bag and adapted to be received on one of the said forks and springs on the said shaft and engaging the forks to retain the mail bags thereon, a supporting lever mounted to swing on said supporting member and adapted to engage the ring of the mail bag to retain the mail bag in delivering position on the said fork, a cross piece on the supporting member and adapted to be engaged by said supporting lever to limit the swinging movement of the supporting lever, bars projecting from the shaft of the fork member and shelves on the supporting member and adapted to be engaged by the said bars to limit the swinging movement of the supporting member.

4. In a device of the class described, the combination with a supporting member, of a fork member mounted to swing thereon, and formed of a single piece of material including a shaft, forks projecting from the shaft, a handle on the shaft and bars projecting from the shaft, means on the said supporting member and adapted to be engaged by the said bars to limit the swinging movement of the fork member, a supporting lever mounted to swing on said supporting member, a mail bag and a ring on the mail bag and adapted to be engaged by one of the forks of the fork member and an operating lever for retaining the said ring in delivering position on the said fork member.

5. In a device of the class described, the combination with a supporting member, of a fork member mounted to swing thereon, and formed of a single piece of material including a shaft, forks projecting from the shaft, a handle on the shaft and bars projecting from the shaft, means on the said supporting member and adapted to be engaged by the said bars to limit the swinging movement of the fork member, a supporting lever mounted

to swing on said supporting member, a mail bag and a ring on the mail bag and adapted to be engaged by one of the forks of the fork member, an operating lever for retaining the said ring in delivering position on the said fork member, and springs on the said shaft and engaging the said forks for retaining the said ring in locked position on one of the forks.

6. In a device of the class described, the combination with a supporting member of brackets thereon, a shaft journaled on the said brackets, forks formed integral with said shaft and extending in opposite directions therefrom, a handle integral with the shaft and adapted to engage said supporting member, a ring, carrying a mail bag and adapted for engagement with one of the said forks, means on the said shaft and adapted to engage said supporting member to limit turning movement of the shaft and an operating lever movable on the said supporting member to engage the said ring and support the same in delivering position on one of the said forks.

7. In a device of the class described, the combination with a supporting member of brackets thereon, a shaft journaled on the said brackets, forks formed integral with said shaft and extending in opposite directions therefrom, a handle integral with the shaft and adapted to engage said supporting member, a ring, carrying a mail bag and adapted for engagement with one of the said forks, means on the said shaft and adapted to engage said supporting member to limit turning movement of the shaft, an operating lever movable on the said supporting member to engage the said ring and support the same in delivering position on one of the said forks, and springs secured to the said shaft and having the medial portions thereof engaging the said forks to retain the said ring in locked position on one of the said forks.

8. In a device of the class described, the combination with a station member, comprising a supporting member, a fork member mounted to swing on the supporting member and adapted to receive and support the mail bag of a train member comprising a supporting member, a fork member mounted to swing on the supporting member and adapted to receive and support a mail bag, of means on the fork member of the station member and adapted to receive the mail bag of the fork member of the train member, means on the fork member of the train member and adapted to receive the bag supported on the fork member of the station member, a supporting lever for the fork member of the station member, a removable connection between said operating lever and the fork member of the station member for normally supporting the last mentioned fork member in horizontal position on the supporting member thereof, the said fork member of the station member being gravitationally movable into inoperative position, a handle on the fork member of the train member and a pin on the supporting member of the train adapted to engage the handle of the fork member of the train member to secure the last mentioned fork member in operative position, the said last mentioned fork member being gravitationally movable into inoperative position, when the said pin is disengaged from the said handle.

In testimony whereof I affix my signature in presence of two witnesses.

ALBERT E. DICKSON.

Witnesses:
JOHN COLEMAN,
RICHARD H. RINEY.

Copies of this patent may be obtained for five cents each, by addressing the "Commissioner of Patents, Washington, D. C."