May 14, 1963 MAGOICHI USUI 3,089,498

SMOKING DEVICE

Filed Nov. 22, 1961

Fig. 1.

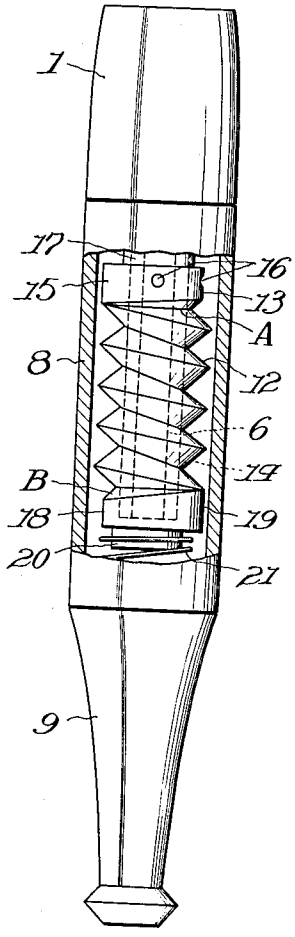

Fig. 2.

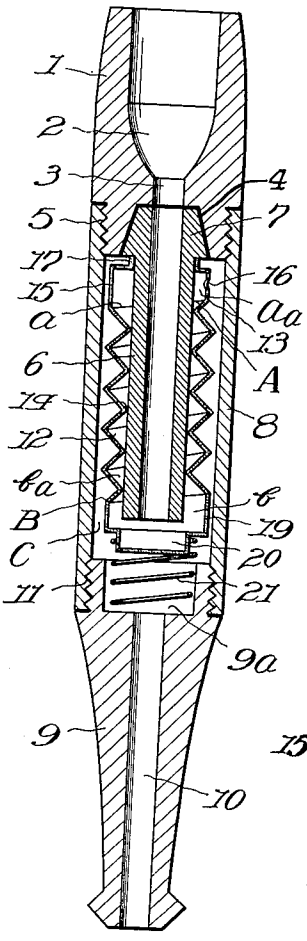

Fig. 3.

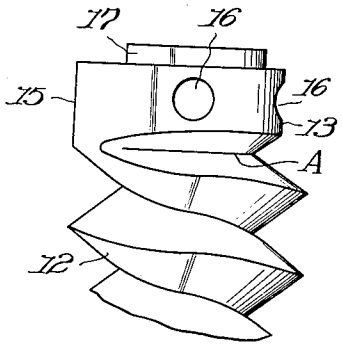

Fig. 4.

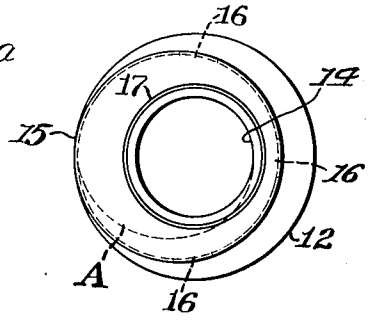

United States Patent Office 3,089,498 Patented May 14, 1963

3,089,498

SMOKING DEVICE

Magoichi Usui, 102 Kamafue-cho, Ogaki-shi, Japan

Filed Nov. 22, 1961, Ser. No. 154,117
1 Claim. (Cl. 131—209)

This invention relates to smoking devices and more particularly to a new and improved construction of the stem portions of smoking pipes and of devices for holding cigarets or cigars.

It is an object of the present invention to provide a new and improved stem construction as stated above wherein the smoke flow path is considerably lengthened so as to cause progressive cooling of the flowing smoke and gases, whereby such instances therein as nicotine and tars, which are harmful if inhaled excessively into the human lung, are caused to be deposited on the walls of the said smoke flow path and be removed thereby without appreciable reduction of the qualities of the smoke producing smoking pleasure.

It is another object to provide such a stem construction as stated in the above object which is compact and enclosed within a volume of length and lateral dimensions which do not exceed those of conventional pipe stems enclosing filter elements.

It is a further object to provide such a stem construction as stated in the foregoing objects which is relatively simple, easily and economically manufactured, easily disassembled for cleaning and easily reassembled by the user.

The foregoing objects, other objects, and advantages of the present invention have been achieved by the stem construction of the present invention, the details of which will be apparent by reference to the following description taken in conjunction with the accompanying illustrations in which the same and equivalent parts are designated by the same reference numerals and letters, and in which:

FIG. 1 is a lateral view, partly in longitudinal section, showing a representative embodiment of the stem construction according to the invention;

FIG. 2 is a lateral view, in longitudinal section, showing further details of the embodiment of FIG. 1;

FIG. 3 is a lateral, enlarged view showing one end of a helical partition suitable for the embodiment of FIG. 1, said end being that nearest the intake side of the stem; and

FIG. 4 is an enlarged plan view of the helical partition shown in FIG. 3.

For the purpose of simplicity, the following detailed description will be limited to the construction according to the invention as applied to a cigaret holder, but it will be understood that other applications, for example, to smoking pipes in the bowls of which tobacco is burned directly, are possible.

Referring particularly to FIGS. 1 and 2, the cigaret holder illustrated has a socket head **1** in which a socket opening **2** for holding a cigaret has been formed. A smoke passage **3** is provided at the downstream end of the socket opening **2** and communicates with a tapered opening **4** having the form of a truncated cone. The inner end of the socket head **1** is reduced in diameter and provided with external screw threads **5** which engage with internal threads on an outer hollow cylinder **8**. A mouthpiece **9** provided with a smoke passage **10** is similarly screwed into the other end of the outer cylinder **8** by means of threads **11**. In assembled state, the socket head **1**, outer cylinder **8**, and mouthpiece **9** form the outer structure of the cigaret holder.

An inner hollow cylinder **6** is so disposed that its head portion **7**, which is in the form of a truncated cone, fits snugly into the tapered opening **4** of the socket head **1**. This inner cylinder **6** is retained in place and encompassed

at its shank part by a helical partition **12** which, in turn, is held by elastic force exerted by a compression spring **21**, which is seated, at its other end, in the bottom of a recessed well **9***a* formed in the upstream end of the aforesaid mouthpiece **9**.

The helical partition **12** is made of synthetic resin sheet material or any other suitable, thin-sheet material having elastic properties. Its general form is that of a cylindrical bellows, open at one end and closed at the other, its longitudinal wall being formed into a helical configuration of alternately spiralling ridges and spiralling valleys. Its outer diameter, as measured at the outer peak of the said ridge, is made to be slightly less than the inner diameter of the outer cylinder **8**, while its inner diameter, as measured at the inner part **14** of the bottom of the said valley, is made to be slightly greater than the outer diameter of the shank part of the inner cylinder **6**. In the vicinity of the open end of the helical partition **12**, the cylindrical form thereof is reduced, at one portion, for example, the right hand side **13** (as viewed in FIG. 1), to a diameter which is intermediate between the diameter at the valley **14** and the outer diameter at the ridge. The said portion is made to be the starting point of the helical valley line, and the valley is made to become progressively more shallow toward the opposite side, for example, the left hand side **15**, until the said valley finally disappears at the portion **15**. A desired number of holes **16** for pasing smoke are formed in the wall of the helical partition **12** in the region of the right hand side **13**. With this configuration, only the initial semi-circle assumes the form of a screw A.

The opposite, closed end of the helical partition **12** is similarly formed, whereby only the initial semi-circle at this end assumes the form of a screw B. The extreme closed end of the helical partition **12** is so formed in the shape of a protruding bottom **20** as to fit into the end of the aforesaid spring **21**. The extreme open end of the helical partition **12** is provided with a rim **17** which, in assembled state, encompasses the root portion of the shank of the inner cylinder **6** and is pressed, by the elastic force of the spring **21** by way of the partition **12**, against the shoulder of the head portion **7** of the inner cylinder **6**. It will be apparent that the above-described construction affords secure and aligned retention of the helical partition **12** and inner cylinder **6** in their correct, coaxial positions.

The operation of a cigaret holder of the above-described construction will now be described. The smoke drawn in from a cigaret fitted into the socket opening **2** flows successively through the socket opening **2**, smoke passage **3**, and the inner passage of the inner cylinder **6** and reaches the closed end of the helical partition **12**. From this closed end, the smoke passes through the region *b* at the termination of the helical ridge and the space between the screw portion B which is not in contact with the inner cylinder **6** and enters through the region b_a into the helical passage formed by the inner surface of the helical partition **12** and the outer surface of the inner cylinder **6**. The smoke next flows through a helical path through this helical passage toward the open end of the helical partition **12**, where it flows through the region *a* and the space in the special screw portion A which is not in contact with the inner cylinder **6** and enters the cylinder portion a_a. The smoke then passes through the holes **16** of the cylinder portion a_a and enters the helical passage formed by the helical partition **12** and the outer cylinder **8**. The smoke tends to flow through the helical path formed by said helical passage until it reaches and flows through the portion C of the outer cylinder **8**, thereafter passing through the smoke passage **10** of the mouthpiece **9**, into the mouth of the smoker.

By the above-described construction the total length

of the passage through which the smoke is caused to flow from the cigaret to the mouthpiece is greatly lengthened, whereby harmful substances such as nicotine and tars in the smoke are progressively cooled and caused to be removed from the smoke by deposition on the walls of the passage without appreciable reduction of the qualities of the smoke producing smoking pleasure.

Furthermore, the above-described construction enables the internal parts of the smoking device to be taken out and completely disassembled for cleaning by merely unscrewing and removing only one of either the socket head **1** or the mouthpiece **9**, and by unscrewing the other end part, all parts are completely disassembled.

While only one embodiment has been described in connection with a cigaret holder, it will be obvious that a similar construction can be applied to other smoking devices such as a smoking pipe of the type with a wood, ceramic, or metal bowl for burning of pipe tobacco directly therein or a cigar holder.

Since it is also obvious that many changes and modifications can be made in the above-described details without departing from the nature and spirit of the invention, it is to be understood that the invention is not to be limited to the details described herein except as set forth in the appended claim.

What is claimed is:

In a smoking article of the type having a mouthpiece at one end and a socket head for holding means for burning tobacco at the other end, the construction of the stem portion between said mouthpiece and socket head which comprises: an inner hollow cylinder having a tubular shank and a head portion of the shape of a truncated cone which fits snugly into a corresponding tapered opening in the

said socket head; an outer hollow cylinder joined at one end to said socket head and at the other end to said mouthpiece to form the outer structure of the stem portion; a helical partition made of thin-sheet material having elastic properties and formed to resemble a cylindrical bellows, open at one end and closed at the other, its longitudinal wall being of helical configuration consisting of spiralling ridges and spiralling valleys so that said outer cylinder is disposed concentrically about said helical partition, which in turn is disposed concentrically about the said inner cylinder to form inner and outer helical passages concentrically disposed between said inner and outer cylinders, said helical partition being so disposed that its open end abuts against the aforesaid head of the inner cylinder for retention thereof; and a compression spring which is held at one end in a recess in the said mouthpiece and which at its other end abuts against and retains the said helical partition, the foregoing parts being so disposed that, in operation, suction on the mouthpiece causes smoke to flow from the socket head, successively through the inner cylinder, the said inner helical passage, the said outer helical passage, and the mouthpiece into the smoker's mouth.

References Cited in the file of this patent

UNITED STATES PATENTS

296,417	Lange	Apr. 8, 1884
331,569	Tappe	Dec. 1, 1885
1,652,572	Highfield	Dec. 13, 1927
1,935,052	Hayden	Nov. 14, 1933
2,164,982	Beaudry	July 4, 1939