Nov. 5, 1946. J. D. STROBELL 2,410,692

LIQUID DISCHARGING DEVICE

Filed June 17, 1943 2 Sheets-Sheet 1

Fig. 1.

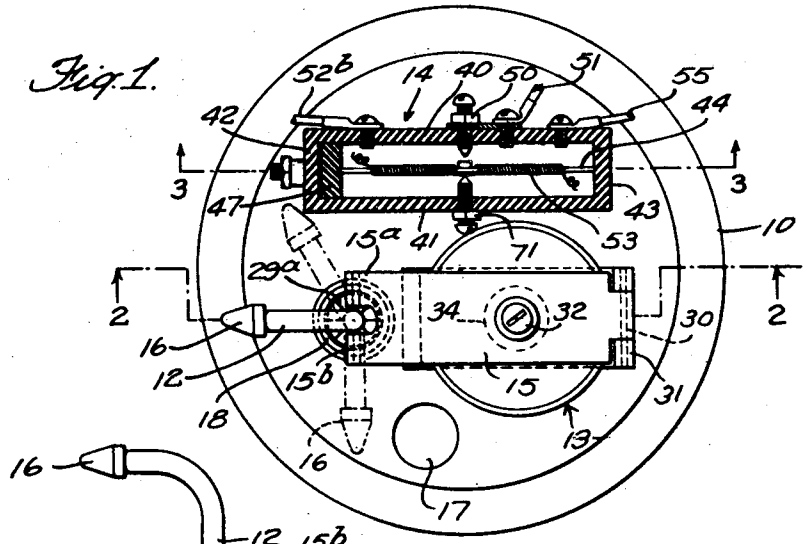

Fig. 2.

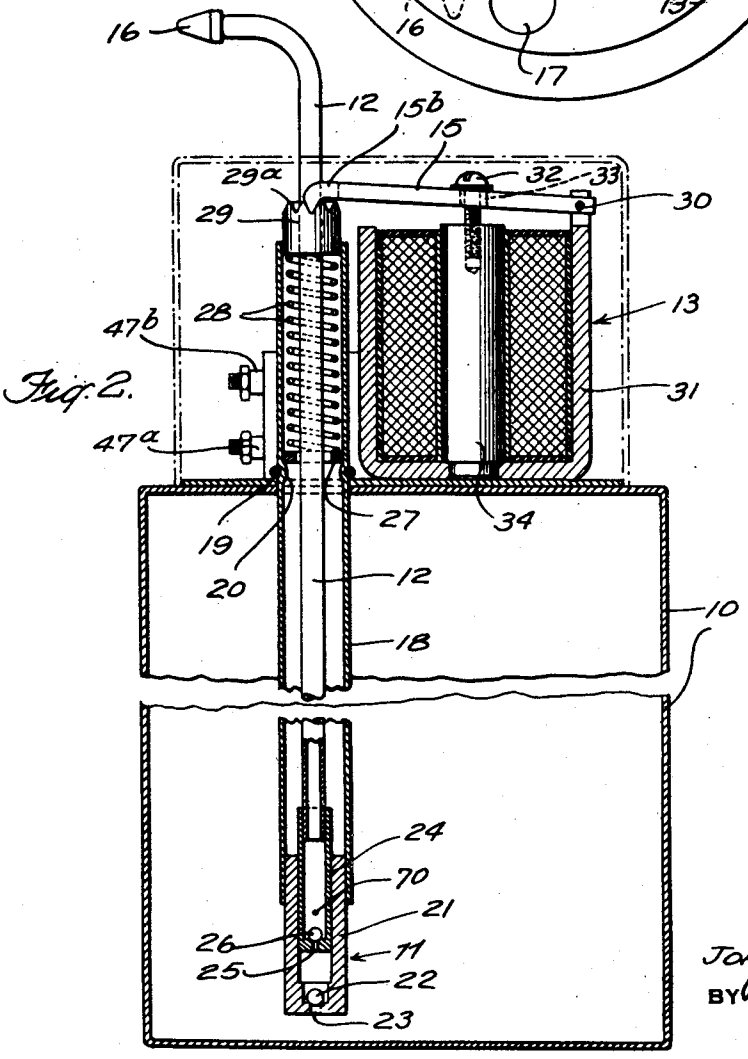

INVENTOR:—
JOHN D. STROBELL,
BY Blair, Curtis & Hazard,
ATTORNEYS.

Nov. 5, 1946. J. D. STROBELL 2,410,692

LIQUID DISCHARGING DEVICE

Filed June 17, 1943 2 Sheets-Sheet 2

Fig. 3.

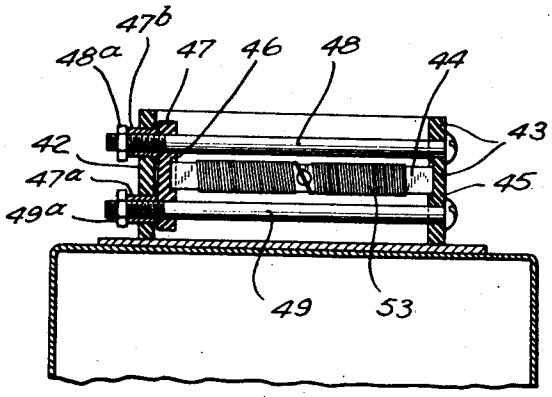

Fig. 5.

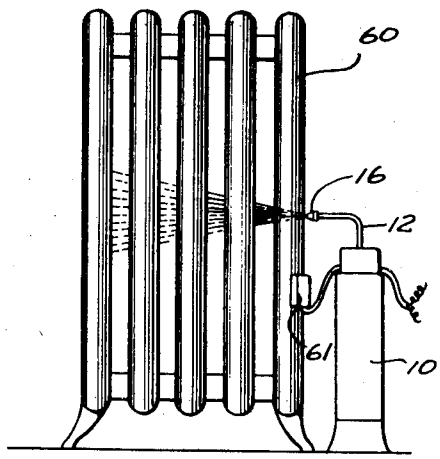

Fig. 4

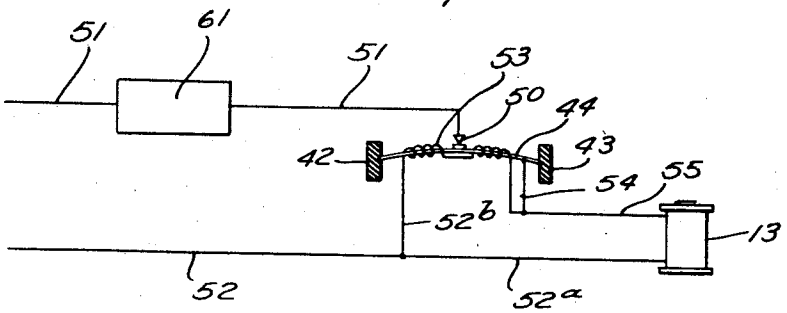

INVENTOR:-
JOHN D. STROBELL,
BY Blair, Curtis and Hayward,
ATTORNEYS.

Patented Nov. 5, 1946

2,410,692

UNITED STATES PATENT OFFICE

2,410,692

LIQUID DISCHARGING DEVICE

John D. Strobell, New Haven, Conn., assignor to The Safety Car Heating and Lighting Company, Inc., a corporation of Delaware

Application June 17, 1943, Serial No. 491,085

4 Claims. (Cl. 299—97)

1

This invention relates to a liquid discharging device and more particularly to a spraying device for spraying liquid deodorants and for use as a humidifier.

One of the objects of this invention is to provide a simple, practical, and thoroughly durable liquid discharging device. Another object of the invention is to provide a device of the above character, the manufacture of which will be economical both from the standpoint of labor and material used. Another object is to provide a device of the above character which will operate automatically. Still another object is to provide a device of the above character automatically controlled by heating or air-conditioning systems. A further object is to provide a device of the above character which will be economical to operate. A still further object is to provide a device of the above character capable of spraying a volatile liquid at a uniform rate in relatively small amounts. Other objects will be in part obvious and in part pointed out hereinafter.

The invention accordingly consists in the features of construction, combinations of elements, and arrangements of parts as will be exemplified in this structure to be hereinafter described, and the scope of the application of which will be indicated in the following claims.

In the accompanying drawings in which is shown one of the various possible embodiments of this invention,

Figure 1 is a top plan view of the apparatus, certain portions thereof being in section;

Figure 2 is a vertical section of the device;

Figure 3 is a vertical section of certain portions of the device taken on the line 3—3 of Figure 1;

Figure 4 is a diagrammatic showing of a circuit for the device for use with direct current; and,

Figure 5 is a vertical elevation of the device in use in conjunction with a heating radiator.

Similar reference characters refer to similar parts throughout the several views of the drawings.

As conducive to a clearer understanding of certain features of this invention, it might here be pointed out that in the past considerable difficulty has been experienced with sprayers of the above type. In devices of this character which have a continuous spray, it has been found necessary to provide a very small nozzle orifice to limit the amount of the liquid sprayed. This has caused considerable difficulty because even small particles of dirt in the liquid being sprayed clog the nozzle orifice. Furthermore, such devices

2

usually use an electric motor and motor driven pump which make a device relatively expensive to manufacture and also expensive to operate. It is accordingly another object of this invention to provide an efficient and economical spraying device which overcomes the above mentioned difficulties, as well as many others.

In general, referring to Figures 1 and 2, the device includes a container 10 having a pump, generally indicated at 11, and discharge tube 12 mounted thereon. The pump is operated by a solenoid, generally indicated at 13, which is intermittently energized by the automatic operation of a switch, generally indicated at 14. Each time solenoid 13 is energized, it acts through arm 15 and discharge tube 12 to operate the pump 11 and thus spray liquid through the nozzle 16 of discharge tube 12.

Container 10 may be of any desired shape and has a suitable opening 17 (Figure 1) through which it may be filled with the liquid to be sprayed. A tube 18 (Figure 2) extends downwardly into container 10 a substantial distance and is prevented from moving downwardly therein by a ring 19 which fits in an annular indentation 20 in the side wall of tube 18 and which contacts the upper surface of a plate secured to the top of container 10. The pump cylinder 21 of pump 11 is secured in the lower end of tube 18 and has a check ball 22 adapted to cover an intake opening 23 in its lower end. The pump plunger 24, which moves within pump cylinder 21, has an opening 25 in its lower end covered by a check ball 26. The upper end of hollow plunger 24 is secured to discharge tube 12 by which the pump 11 is operated.

A washer 27, positioned within tube 18, rests on the shoulder formed in the interior tube by annular indentation 20. A spring 28 acts between washer 27 and a collar 29 secured to discharge tube 12 to resiliently urge the collar 29 and thus tube 12 and plunger 24 upwardly. Upward movement of these parts is limited by arm 15 (Figure 2) which is pivotally connected by pin 30 to the frame 31 of solenoid 13 which in turn is connected to container 10. A screw 32 extends downwardly through a hole 33 in arm 15 having a greater diameter than the shank of screw 32 and threads into the core 34 of solenoid 13.

Arm 15 has yoke portions 15a and 15b (Figure 1) formed on its left-hand end, as viewed in this figure. The yoke portions 15a and 15b curve downwardly to engage radial serrations 29a in the upper side of collar 29. The radial serrations

29a on collar 29 extend completely around the collar 29 and are so disposed that each serration is aligned with a serration of the opposite side of the collar. To adjust the direction in which the liquid is to be sprayed, the user presses downwardly on tube 12 compressing spring 28 and turns the tube to the direction in which spraying is desired. When the pressure is released, portions 15a and 15b engage the aligned pair of serrations positioned beneath them. Thus referring to Figure 1, liquid may be sprayed in any direction in a horizontal plane.

In operation, as the winding of solenoid 13 is energized, metal arm 15 is pulled downwardly by core 34 and arm 15 acts through collar 29 and tube 12 to press plunger 24 downwardly in cylinder 21. When the circuit to the solenoid is broken, spring 28 acts through collar 29 and tube 12 to move plunger 24 upwardly. On the upward stroke, liquid is taken into cylinder 21 past check ball 22, filling the space beneath plunger 24. On the stroke down, check ball 22 seals opening 23 and the liquid within cylinder 21 is forced upwardly into discharge tube 12. A pin 70 is provided to limit the upward movement of check ball 26. The reciprocating action of plunger 24 continues until the discharge tube is full, at which time each downward stroke of plunger 24 causes liquid to be sprayed from nozzle 16. The length of the stroke of plunger 24 may be adjusted by adjusting screw 32 upwardly or downwardly.

The energization of solenoid 13 is controlled by switch 14. This switch has a rectangularly shaped casing including side walls 40 and 41 and end walls 42 and 43 made of a non-conducting material. A bi-metallic strip 44 (Figures 1 and 3) is mounted within the non-conducting casing and one end fits in a vertical slot 45 (Figure 3) in end wall 43. The other end of bi-metallic strip 44 is mounted in a slot 46 in an adjustable support 47. Adjustable support 47, which is made of a non-conducting material includes stud portions 47a and 47b, which extend through holes in end wall 42 mounting support 47 for horizontal movement with respect to end wall 42. Screws 48 and 49 extend through end wall 43, support 47, and stud portions 47a and 47b of base 47. By adjustment of nuts 48a and 49a of screws 48 and 49, support 47 is moved with relation to end wall 42 applying longitudinal pressure on the end of bi-metallic strip 44. This pressure is sufficient to cause the bi-metallic strip 44 to buckle and contact an adjustable contact screw 50 (Figure 1) at normal temperature.

Referring to the circuit (Figure 4) one of the lines 51 from the source of current is connected to contact screw 50 (Figure 1). The other line 52 has one branch 52a leading directly to the winding on solenoid 13 and the other branch 52b leads to a heating coil 53 on bi-metallic strip 44. The other end of heating coil 53 is connected both to the bi-metallic strip 44 by line 54 and to the end of the winding on solenoid 13 by line 55. As stated hereinabove, at normal temperature bi-metallic strip 44 is buckled by screws 48 and 49 (Figure 3) acting through support 47 to cause the strip to contact contact member 50. This completes a circuit to heating coil 53 and at the same time solenoid 13 is energized. This causes a downward stroke of the plunger 24 (Figure 2). When bi-metallic strip 44 has been heated to a sufficient degree by heating coil 53, bi-metallic strip 44 flexes and thus moves away from contact with line 51. This breaks the circuit to both the heating coil and the solenoid and permits spring 28 (Figure 2) to move the plunger 24 upwardly. When bi-metallic strip 44 (Figure 3) cools, it flexes in the opposite direction and contacts contact 50. This again completes the circuit to heating coil 53 and solenoid 13 causing another downward stroke of the plunger 24. It will thus be seen that solenoid 13 is intermittently energized by automatic switch 14 and that each time it is energized, the liquid in container 10 is sprayed through nozzle 16 (Figure 2). An adjustable stop screw 71 (Figure 1) is provided in the flexing path of bi-metallic strip 44, and through the adjustment of this screw and contact screw 50, a wide variation in the interval between successive contacts of the screw 50 and strip 44 may be obtained.

Referring to Figure 5, the device described hereinabove is shown being operated in conjunction with a heating radiator 60. When used in this manner, the spray from nozzle 16 is directed toward the radiator, vaporized by the heat thereof, and then carried through the air in the space being humidified or deodorized by natural convection of the air in the space. To insure that the device will operate only when the radiator 60 is hot, a thermostat 61 may be mounted on radiator 60 in any suitable manner. This thermostat, which may be of any suitable type, is preferably connected into line 51 (Figure 4) and completes the circuit through this line only when the radiator is hot. Thus, in operation, whenever the radiator is hot, the circuit to solenoid 13 is completed and liquid is intermittently sprayed on the radiator.

Thus a practical and efficient spraying device has been disclosed which will introduce a volatile liquid into a space in relatively small amounts at a uniform rate. Furthermore, the other objects set forth hereinabove, as well as many others, are successfully accomplished by this device.

As many possible embodiments may be made of the above invention, and as many changes might be made in the embodiment above set forth, it is to be understood that all matter hereinbefore set forth or shown in the accompanying drawings is to be interpreted as illustrative and not in a limiting sense.

I claim:

1. In combination with means forming a container for liquid, a liquid discharging device comprising, a cylindrical member having one end extending out of the container and the other end extending below the liquid level in the container, an inner liquid tube positioned concentrically within said cylindrical member and having one end projecting beyond the cylindrical member away from the container, a pump below the liquid level and formed by stationary means attached to said cylindrical member and a pump plunger attached to said liquid tube, a liquid discharging nozzle connected to said liquid tube at the end thereof opposite said pump and adapted to discharge the liquid radially with respect to the axis of said cylindrical member, means extending from said liquid tube and forming therearound an annular ledge having a radially grooved annular surface, a forked lever having a free forked end spanning said liquid tube with the two arms of the fork having ends resting respectively on the opposite sides of the liquid tube in the grooves in said ledge, means pivoting the other end of said lever, a spring and stop arrangement holding said liquid tube with said annular surface against said forked lever and at one extreme position of a predetermined rocking movement, and a solenoid assem-

bly to swing said forked lever against the action of said spring, whereby the intermittent energization of said solenoid imparts reciprocating movement to said liquid tube with the result that the liquid is discharged from said nozzle.

2. In combination, a container for liquid; and a liquid discharging device comprising, a cylindrical member having one end extending out of the container and the other end extending below the liquid level in the container, an inner liquid tube positioned concentrically within said cylindrical member and having one end projecting beyond the cylindrical member away from the container, a pump below the liquid level and formed by a stationary cylinder attached to said cylindrical member and a pump plunger attached to said liquid tube, a liquid discharging nozzle connected to said liquid tube at the end thereof opposite said pump and adapted to discharge the liquid radially with respect to the axis of said cylindrical member, means integral with said liquid tube and forming therearound an annular ledge having a radially grooved annular surface, a forked lever having a free forked end spanning said liquid tube with the two arms of the fork having ends resting respectively on the opposite sides of the liquid tube in the grooves in said ledge, means pivoting the other end of said lever, a stop means, a spring holding said liquid tube with said annular surface against said forked lever and with said forked lever against said stop means at one extreme position of a predetermined rocking movement, and a solenoid assembly to swing said forked lever against the action of said spring, whereby the intermittent energization of said solenoid imparts reciprocating movement to said liquid tube with the result that the liquid is discharged from said nozzle.

3. A liquid discharging device adapted to be positioned on the top of a container for liquid and comprising a stationary tubular member having one end adapted to extend out of the container and the other end adapted to extend into the container when said device is positioned thereon, an inner liquid tube positioned within said tubular member and having one end projecting beyond the tubular member away from the container, a pump including a cylinder at the lower end of said tubular member and a pump plunger at the lower end of said inner liquid tube, a liquid discharge means connected to said inner liquid tube at the end thereof opposite said pump and directed to discharge the liquid radially with respect to the axis of said tubular member, means extending from said inner liquid tube and forming therearound an annular ledge having a radially grooved annular surface, a forked lever having a free forked end spanning said inner liquid tube with the two arms of the fork having ends resting respectively on the opposite sides of the inner liquid tube in the grooves in said ledge, means pivoting the other end of said lever, a spring and stop arrangement holding said inner liquid tube with said annular surface against said forked lever and at one extreme position of a predetermined rocking movement, and a solenoid assembly to swing said forked lever against the action of said spring, whereby the intermittent energization of said solenoid imparts reciprocating movement to said liquid tube.

4. In a device of the nature described, in combination, a container for a volatile liquid, pump means including a tubular plunger member and a cylinder member, means for holding said cylinder member stationary with respect to said container, means for resiliently urging said plunger member upwardly, intermittently actuated solenoid means, collar means secured to said plunger member and having serrations on the top surface thereof, an arm member actuated by said solenoid means with the end of said arm member being shaped to enter and thereby coact with the serrations on said collar means to hold the plunger member in adjusted position and to move the plunger member downwardly, and liquid discharge means connected to said plunger member and directed laterally thereof, said liquid discharge means being thereby connected to said pump means through said plunger member for discharging the liquid pumped by said pump means.

JOHN D. STROBELL.