(19) Europäisches Patentamt
European Patent Office
Office européen des brevets

(11) **EP 4 531 498 A2**

(12) **EUROPEAN PATENT APPLICATION**

(43) Date of publication:
02.04.2025 Bulletin 2025/14

(21) Application number: **24200452.1**

(22) Date of filing: **16.09.2024**

(51) International Patent Classification (IPC):
H05B 3/14 *(2006.01)* ***H05B 3/26*** *(2006.01)*
H05B 3/84 *(2006.01)*

(52) Cooperative Patent Classification (CPC):
H05B 3/141; H05B 3/265; H05B 3/84;
H05B 2203/013; H05B 2203/017

(84) Designated Contracting States:
AL AT BE BG CH CY CZ DE DK EE ES FI FR GB GR HR HU IE IS IT LI LT LU LV MC ME MK MT NL NO PL PT RO RS SE SI SK SM TR
Designated Extension States:
BA
Designated Validation States:
GE KH MA MD TN

(30) Priority: **26.09.2023 PL 44621923**

(71) Applicant: **ML SYSTEM Spólka Akcyjna**
36-062 Zaczernie (PL)

(72) Inventors:
- **Cycon, Dawid**
  35-317 Rzeszów (PL)
- **Kwasnicki, Pawel**
  35-233 Rzeszów (PL)

(74) Representative: **Warzybok, Tadeusz**
Biuro Patentowe "INICJATOR" Sp.z o.o.,
ul. Zolkiewskiego 7B/1
35-203 Rzeszow (PL)

(54) ELECTRIC HEATING PANEL WITH INCREASED EFFICIENCY OF CONVERTING ELECTRICAL ENERGY INTO THERMAL ENERGY AND METHOD OF MANUFACTURING AN ELECTRIC HEATING PANEL

(57) The subject of the invention is an electric heating panel with increased efficiency of converting electrical energy into thermal energy and a method of manufacturing an electric heating panel, wherein the panel consists of a glass pane (1) with a textured ceramic layer (2) printed on its upper surface with a thickness of g1 = 50 μm - 480 μm and a glass pane (3) with a transparent heating layer (4) - FTO, ITO, AZO with a thickness of g3 = 180 μm - 700 μm deposited on its upper surface, comprising metal oxides: tin, zinc, indium, wherein two electrodes (5) with a width of S1 = 3mm - 15mm and a thickness of g4 = 50 μm - 500 μm and resistances per 1 m not exceeding 1 Ω are deposited on the heating layer (4), with one end of each electrode connected to electrical contact leads (6), and further, a temperature sensor (7) connected by a copper electrical wire (8) to an externally powered control system (15) is deposited on the heating layer (4), housed in a plastic casing (14) inseparably connected to the lower surface of the glass pane (3), and additionally, the lower surface (10) of the glass pane (1) and the heating layer (4) deposited on the upper surface of the glass pane (3) are laminated together using a lamination polymer film (9) with a thickness of g5 = 300 μm - 0.85mm.

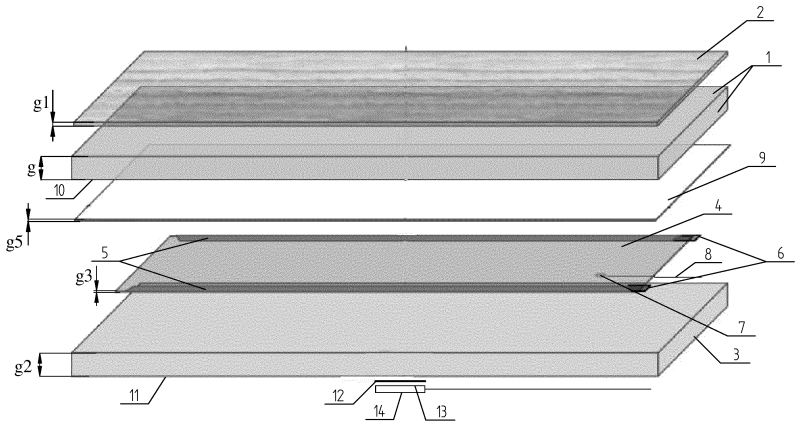

Fig. 3

EP 4 531 498 A2

Description

[0001] The subject of the invention is an electric heating panel with increased efficiency of converting electrical energy into thermal energy and a method of manufacturing an electric heating panel, intended for heating rooms inside buildings.

[0002] Polish patent description No. PL 223597B1 discloses an electrically heated glass panel and a method of its manufacture intended for use as a freestanding heater or for use in windows installed in buildings and vehicles. The essence of the construction of this electrically heated panel is that it consists of a tempered glass pane coated on at least one side with an electrically conductive coating of high resistance, forming a heating field, which is connected to supply strips made of current-conducting metals located at two opposite edges of the glass pane, wherein both these supply strips connected by electrical wires, wherein this glass panel is coated with a PVB-type lamination film. An essential feature is also that the supply strips consist of an aluminium-zinc layer applied to the conductive coating by cold pressure spray method with a thickness of 0.39 to 0.41 mm and a width of 5 to 7 mm, consisting of aluminium in an amount of 45% to 55% and zinc in an amount of 45% to 55%, and a copper-zinc layer applied to this layer by the same spray method containing 65% to 75% copper and 25% to 35% zinc. Both the conductive coating and the supply strips feeding it are located on both sides of the glass pane, with a strip not coated with the conductive coating in the central part of this glass panel, between two opposite edges of the glass pane wherein the supply strips are located, which is surrounded by insulating strips that do not conduct electricity, while at the edges of the glass pane there are supply strips to which electrical wires connected to a temperature controller are attached, with gaps of 4 to 5 mm wide between the insulating strips and the supply strips between which the heating field is located, while the electrical wires are connected to a power controller.

[0003] Polish utility model application No. W. 128602 discloses a heating panel having a front plate, a heating film, a thermal insulation layer and a rigid structural plate, characterised in that the front plate is a mineral-ceramic plate and has a front surface directed towards the heated space and a rear surface to which a multi-layer heating segment adheres, which consists of a heating film having an electro-heating carbon layer, a screen with a metallic surface capable of reflecting infrared radiation and a thermal insulation layer, and behind this segment is placed a structural plate. The structural plate and the mineral front plate are connected by a binder laterally surrounding the heating segment, while the heating film is electrically connected via a Graetz bridge to an electrical output supplying power from a 230V electrical current source.

[0004] Polish utility model application No. W. 125636 discloses a multi-layer laminated glass wall heater with a print, electrically heated, made of two or more laminated layers of tempered glass used for heating residential rooms. This heater consists of a front layer, which is tempered glass with a thickness of 4-6 mm with a patterned print layer made on its surface covered with ceramic paint protecting this print, and a rear layer made of tempered glass with a thickness of 4-6 mm, and between these two layers is placed a layer of heating film and a first layer of film laminating the heating film with the front layer of tempered glass and a second layer of film laminating the rear layer of tempered glass with the heating film, electrically controlled by a thermostat ensuring uniform heating of the entire room to the appropriate temperature.

[0005] European patent description No. EP2758351B1 discloses a glass panel comprising a first glass pane partially covered with an electrically conductive coating, the essence of which is that the conductive coating comprises at least one stack of a metal layer and an insulating layer, wherein the metal layer is placed between the first glass pane and the insulating layer, and at least one electronic element placed on the first glass pane, comprising at least one connection terminal electrically connected to the conductive coating. The insulating layer of this glass panel contains at least one of two possible windows opening onto the metal layer, which is situated on the connection terminal, while the metal layer contains two windows in contact with the windows of the insulating layer. In addition, this glass panel has an electrically conductive material placed between the connection terminal and the metal layer, with the electrically conductive material being a silver-filled conductive adhesive, and the conductive coating covering the first glass pane is a low-emissivity coating of the Top N or Energy NT type.

[0006] European patent description No. EP 0025755A1 also discloses an electrically heated window, wherein in one example of its implementation, a transparent glass pane is coated with a coating having a resistance of 1 - 10 ohms. This coating is connected to supply collector strips in the form of strips, located at the edges of this glass pane, and the supply strips are made of silver enamel applied by screen printing.

[0007] In turn, European patent EP 2274251 discloses a transparent window with a heated coating and low-impedance conductive structures. The window is particularly intended for use as a windscreen in vehicles. The transparent pane with an electrically heated coating extends over most of the window surface area and is electrically connected to at least two low-impedance bus bars lying opposite each other. The pane includes at least one conductive structure covering only the heating area outside the central field of view. Conductive structures are formed as printed uniform patterns and as lines or wires. The conductive structures are printed from a screen-printing paste with good conductivity containing silver.

[0008] The paints and pastes used in the presented solutions for forming the supply elements contain silver particles. As a result, the cost of producing electrically

heated glass panes is relatively high. Moreover, a long time is needed to carry out the annealing process. The necessity of annealing involves the consumption of electrical energy, which increases the production cost and negatively impacts the environment. Also, the solvents used in the paints and pastes have a negative impact on the natural environment.

[0009] The aim of the invention is to develop a new simple and compact construction of an electric heating panel using thin homogeneous oxide layers as an element converting electrical energy into thermal energy, integrated with an electronic control system and equipped with a ceramic layer as an element stabilising and maintaining the desired temperature, while ensuring optimal heat transfer to the surroundings.

[0010] The aim of the invention is also to develop a construction of an electric heating panel enabling precise control and setting of the temperature over the entire surface of its heating layer, maintaining the desired temperature for the desired time, and providing protection against overheating of this layer, as well as ensuring high temporal durability with the possibility of operating in varying environmental conditions, including the ability to operate in high humidity and at low temperatures.

[0011] The electric heating panel with increased efficiency of converting electrical energy into thermal energy obtained by the method according to the invention is characterised by the fact that it consists of a first glass pane with a textured ceramic layer printed on its upper surface with a thickness of g1 = 50 μm - 480 μm and a second glass pane with a transparent heating layer - FTO, ITO, AZO deposited on its upper surface with a thickness of g3 = 180 μm - 700 μm, consisting of metal oxides: tin, zinc, indium, wherein two electrodes with a width of S1 = 3mm - 15mm and a thickness of g4 = 50 μm - 500 μm and resistances per 1 m not exceeding 1 Ω are deposited on this heating layer, with one end of each electrode connected to electrical contact leads. Furthermore, a temperature sensor connected by a copper electrical wire to an externally powered control system is deposited on the heating layer, placed in a plastic housing inseparably connected to the lower surface of the second glass pane, and additionally, the lower surface of the first glass pane and the heating layer deposited on the upper surface of the second glass pane are laminated together using a polymer lamination film with a thickness of g5 = 300 μm - 0.85mm.

[0012] It is advantageous if the heating layer - FTO deposited by the magnetron method (PVD) consists of doped metal oxides, with tin oxide as the matrix and fluorine as the dopant with a percentage content of 45% - 65% wt, and if the heating layer - FTO deposited in the pisolitic (PR) process from liquid precursors consists of a mixture of DBTDA (tetra(n-butyl)tin and di(n-butyl)tin(iv)diacetate) (tetrabutyl tin, dibutyl tin octoate) and isopropanol in a ratio of 1:5, or if the heating layer - ITO deposited by the magnetron method (PVD) consists of indium oxide doped with tin with a percentage content of 8% - 16% wt, or if the heating layer - AZO deposited by the ALD method consists of zinc oxide doped with aluminium with a percentage content of 2% - 6% wt.

[0013] It is advantageous if the textured ceramic layer (2) is a ceramic ink containing in its qualitative and quantitative chemical composition:

- an alcohol-based solvent with a purity of 99% and a percentage content of 65% - 75% wt
- ethylene glycol with a percentage content of 10% - 15% wt
- hexadecyltrimethylammonium bromide with a surfactant percentage content of 5% to 25% wt
- powdered ceramic with a particle diameter of 25 nm - 60 nm with a percentage content of 10% wt - 25% wt, and/or powdered glass frit with a particle diameter of 25 nm - 60 nm with a percentage content of 10% wt - 25% wt, while

the lower surface of the second glass pane is connected to the lower surface of the rectangular housing using transparent high-temperature silicone with a density of 1.1 - 1.2 g/cm^3, a flash point of 400°C and a combustion temperature of 700°C.

[0014] The essence of the method of manufacturing an electric heating panel with increased efficiency of converting electrical energy into thermal energy according to the invention is that it is implemented in six consecutive stages, consisting of:

- in the first stage, both glass panes are subjected to a washing process in a water washer using demineralised water, after which
- in the second stage, a textured ceramic layer with a thickness of g1 = 50 μm - 480 μm is printed on the upper surface of the first glass pane using a ceramic ink with an INK JET printer at a temperature of 18°C - 21°C and humidity not exceeding 50%, after which the printed ceramic layer is subjected to a curing process at a temperature of 420°C - 550°C for 12 to 18 minutes, after which
- in the third stage, a transparent oxide heating layer - FTO, with a thickness of g3 = 180 μm - 580 μm is deposited on the upper surface of the second glass pane using the PVD magnetron technique at room temperature 18°C - 24°C, for 120-360 seconds, wherein the deposited material is a source target in the form of tin oxide doped with fluorine with a percentage content in the range of 45% - 65% wt (SnO2:F) in the form of a solid with a purity of 99.99% and a melting temperature of 1625°C - 1650°C. In the process of magnetron deposition of this heating layer, the interaction of charged particles with the magnetic field is used, in which the ion flux is generated as a result of bombarding the surface of the source target with ionised gas molecules - argon produced as a result of applying an electric voltage between the carrier surface and this target. Then, a

temperature sensor with a diameter of less than 0.5 mm equipped with a copper electrical wire placed in a silicone sheath is placed on this heating layer, and then

- in the fourth stage, two metallic electrodes with widths S1 = 3 mm - 15 mm and thicknesses g4 = 50 μm - 500 μm containing 99.8% by weight of copper are deposited along both longer edges of the second glass pane using the ultrasonic technique, plasticising the electrode material and the place of their connection with the heating layer so that the particles of both these materials mix with each other due to vibrational movements generated by the ultrasonic head with its vibration frequency of 20 kHz - 25 kHz and power of 3900 W - 4100 W, wherein this process is carried out at room temperature 20°C - 24°C with humidity not exceeding 60%, and then
- in the fifth stage, the lower surface of the second glass pane is connected to the lower surface of the plastic housing using transparent silicone. The housing contains a display, backlit touch buttons, and an electronic control system electrically connected - feedback with the electrodes of the heating layer and the electrical wire with the temperature sensor. The connected elements are then dried at a temperature of 40°C - 65°C for 8 to 10 hours, and then
- in the sixth stage, both glass panes are laminated in a membrane laminator at a temperature of 90°C - 135°C, for 50 min - 80 min, using a lamination polymer film with a thickness of g5 = 300 μm to 0.85 nm, placed between the lower surface of the first glass pane and the heating layer of the second glass pane, wherein this process involves evacuating air using vacuum pumps to obtain a vacuum of 0.75 bar and raising the temperature to 130°C +/- 5% at a rate of about 1°C/50 seconds, maintaining temperature uniformity at 98% for the entire glass panel surface. Then both glass panes are cooled to ambient temperature of 20°C - 24°C in 50 to 60 minutes, after which the vacuum pumps of the membrane laminator are turned off.

[0015] It is advantageous when the ceramic ink used to print the ceramic layer contains in its qualitative-quantitative chemical composition

- an alcohol-based solvent with a purity of 99% and a percentage content of 65% - 75% wt
- ethylene glycol with a percentage content of 10% - 15% wt
- hexadecyltrimethylammonium bromide with a surfactant percentage content of 5% to 25% wt
- powdered ceramic with a particle diameter of 25 nm - 60 nm with a percentage content of 10% to 25% wt, or
- powdered glass frit with a particle diameter of 25 nm - 60 nm with a percentage content of 10% to 25% wt, or
- powdered ceramic together with powdered glass frit with their particle diameter of 25 nm - 60 nm and a percentage content of 10% to 25% wt.

[0016] In a preferred example of the method according to the invention, in its third stage, a transparent oxide heating layer - FTO with a thickness of g3 = 700 μm is applied to the previously cleaned upper surface of the second glass pane in a pisolitic (PR) vaporisation process from liquid precursors, in which the source material is a mixture of DBTDA (tetra(n-butyl)tin, di(n-butyl)tin(iv) diacetate) (tetrabutyltin, dibutyltin octanoate) and isopropanol in a ratio of 1:5 in an amount of 550 ml heated to 35°C, to which a solution of NH_4F and distilled water in a ratio of 0.8g/2.5 ml in an amount of 150 ml is added and mixed for 15 minutes to obtain a clear solution. The obtained precursor is then applied to the entire surface of the glass pane, heated to 155°C, using spray nozzles positioned 12-15 cm from the upper surface of the second glass pane. The pane is then annealed at 250°C for 10 min, achieving a permanent connection of the precursor with the surface of the glass pane.

[0017] In another preferred example of the method according to the invention, in its third stage, a transparent oxide heating layer - ITO with a thickness of g3 = 580 μm is applied to the previously cleaned upper surface of the second glass pane using the PVD technique by magnetron sputtering from a target source composed of 90% indium oxide (III) and 10% tin oxide (IV), wherein this process is implemented using a PVD magnetron sputterer with a power of 1.55 KW at a temperature of 350°C, for 900 seconds and at a process pressure of 0.75 Pa, using a gas mixture composed of 95.5% - 97% argon and 3% - 4.5% oxygen.

[0018] In yet another preferred example of the method according to the invention, in its third stage, a transparent oxide heating layer - AZO of zinc oxide (ZnO) with a thickness of g3 = 300 μm is applied to the previously cleaned upper surface of the second glass pane using the ALD method, through sequential alternating delivery of chemical reagents to the upper surface of the glass pane, wherein this process is implemented through adsorption of the reagent to the substrate surface and through a chemical reaction occurring between: the adsorbed reagent supplied by reaction gases - gaseous -precursors: diethylzinc (DEZ) 99% with a molar weight of 123.5 g/mol, trimethylaluminium (TMA) 99% with a molar weight of 114.18 g/mol and water. The process is implemented at 200°C for 1100 cycles with flows set to: 10000 sccm for N_2, 1000 for diethylzinc (DEZ) at room temperature, 100 for trimethylaluminium (TMA) at room temperature and 1500 for water (H_2O) heated to 35°C. Nitrogen is used as an inert gas to flush the chamber after each cycle.

[0019] It is advantageous when the transparent silicone used to connect the plastic housing to the second glass pane is adapted to work in the temperature range from -50°C - 220°C and has a density of 1.1 - 1.2 g/cm^3, a flash point of 400°C and a combustion temperature of 700°C.

[0020] Magnetron PVD deposition on the upper surface of the rear glass pane made of tempered glass of the multi-layered electric heating panel laminated into a single monolith of metallic oxide layers such as FTO, ITO, or AZO, thanks to the ability to control the degree of doping and their thickness during their growth stage, allows for optimal adjustment of their electrical properties, including electrical resistance per unit area, which in turn enables the use of the Joule-Lenz effect and efficient conversion of electrical energy into thermal energy. These layers can be produced in processes of Atomic Layer Deposition (ALD) by chemical method, Physical Vapour Deposition (PVD), or in the pyrolytic process (PR), and their main feature is achieving electrical resistance at the level of 30-85 ohm/sq.

[0021] The heating panel according to the invention has an integrated electronic control system with a temperature measurement system on the surface of the heating layer with touch control buttons and an LED display, ensuring readability of the obtained parameters. This panel also allows setting the temperature on the surface of the heating layer in the range of room temperature (RT) to 70°C with a setting accuracy of +/-0.5°C, and thanks to the use of a homogeneous oxide layer, the surface of this panel heats uniformly at a rate of up to 10°C/min. In turn, the coating of the upper surface of the front glass pane, also made of tempered glass, with a ceramic layer of any pattern and colour ensures optimal heat transfer due to its high thermal capacity.

[0022] The advantages of this heating panel according to the invention also include the fact that the combination of layers with controlled resistance with ceramic layers and a precise electronic control system allows for achieving high uniformity of generated thermal energy over the entire surface of the heating layer, resulting in optimal conversion of thermal energy ensuring rapid heat transfer to the environment, wherein the control system directly controls the temperature over the entire heating surface thanks to a temperature sensor placed on this panel in the form of a thermocouple operating in the range from - 20°C to +100°C. The lamination polymer used in the construction of this heating panel serves both as protection against external factors and ensures complete electrical insulation from breakthrough effects.

[0023] The subject of the invention is explained in more detail in the examples of its implementation and in the drawing, in which fig.1 shows an electric heating panel with increased efficiency of converting electrical energy into thermal energy in a top view, fig.2 - the same electric heating panel in a perspective view, fig. 3 - the same electric heating panel in an exploded view of its components, in a perspective view, fig. 4 - the same electric heating panel, in a front view, fig. 5 - the same electric heating panel in a side view, fig. 6 - the same electric heating panel in a vertical cross-section along line A - A in fig. 2, fig. 7 - the electric heating panel shown in fig. 6 but in an exploded view of its components, in a perspective view, fig. 8 - a glass pane with a heating layer deposited on its upper surface equipped with two electrodes and a temperature sensor and with a rectangular housing attached to its lower surface in which the electronic control system (integrated circuit) connected to the power supply wire of this system and both electrodes and the temperature sensor is placed, as well as an LED display and touch buttons placed in this housing, in a top view, fig. 9 - a rectangular housing with the electronic control system placed in it and an LED display and three touch buttons, one side wall of which is equipped with a power supply wire, in a perspective view, and fig. 10 shows a block diagram of the electrical connection of the two electrodes of the heating layer of the glass pane and the temperature sensor and the electronic control system, LED display and three touch buttons and the connection of these elements with the 230V power supply network.

Example 1

[0024] The electric heating panel according to the first variant of its implementation consists of a glass pane 1 made of tempered glass with a length of L=2040 mm, a width of S = 380 mm and a thickness of g =4 mm, on the upper surface of which a patterned ceramic layer 2 with a thickness of g 1 = 50 μm is printed, and a glass pane 3 also made of tempered glass with a length of L=2040 mm, a width of S = 380 mm and a thickness of g2 =4 mm with a transparent heating layer 4 - FTO with a thickness of g3= 180 μm deposited on its upper surface by the PVD (Physical Vapour Deposition) method, consisting of doped metal oxides, with tin oxide as the matrix and fluorine as the dopant in a percentage content range of 45 - 65% wt. Two electrodes 5, both with widths S1 = 3 mm and thicknesses g4 = 50 μm with resistances per 1m not exceeding 1 Ω, are deposited on the surface of the heating layer 4 - FTO using the ultrasonic technique, situated along the longer edges of the glass pane 3, with one end of the electrodes 5 connected to electrical contact leads 6. Furthermore, a temperature sensor 7 with a diameter of less than 0.5 mm, connected to a copper electrical wire 8 placed in a silicone sheath, is deposited on the heating layer 4 - FTO. The heating layer 4 - FTO of the glass pane 3, equipped with two electrodes 5 and a temperature sensor 7, is connected to the lower surface 10 of the glass pane 1 using an EVA (ethylene-vinyl acetate) lamination polymer film 9 with a thickness of g5 = 300 μm, forming a monolithic heating panel. Additionally, the lower surface 11 of the glass pane 3 is attached along its symmetry axis using high-temperature transparent silicone 12 with a density in the range of 1.1 - 1.2 g/cm^3 and a flash point of 400°C to the lower surface 13 of the rectangular housing 14, made of PET plastic with a length L1 = 200mm, width S2 = 120 mm and height h= 10mm, inside which the electronic control system 15, LED display 15', and backlit touch buttons 16, 17, and 18 are mounted, wherein the touch button 16 marked with the "+" symbol is used to increase the heating temperature of the heating layer 4 - FTO of the heating panel, the

backlit touch button 17 marked with the "-" symbol is used to decrease the temperature of this active layer 4, and the touch button 18 marked with the "on/off" symbol located between them is used to turn the power supply to the electrodes 5, and thus the heating layer 4 - FTO of this heating panel, on and off. The electronic control system 15 is electrically connected - feedback with the electrodes 5 of the heating layer 4 - FTO, and the copper wire 8 is connected to the temperature sensor 7, while the touch buttons 16, 17, and 18 are backlit by the display 15' when the heating layer 4 - FTO is fully operational. Both electrical leads 6 of the electrodes 5 and the electronic control system 15 are electrically connected to the external electrical cable 19 with a plug 20, as shown in figs. 8 and 10.

[0025] The ceramic layer 2 is printed with ceramic ink containing in its qualitative-quantitative chemical composition:

- an alcohol-based solvent such as methanol with a purity of 99% and a percentage content of 65% wt
- ethylene glycol with a percentage content of 15% wt
- a surfactant, preferably hexadecyltrimethylammonium bromide, with a surfactant percentage content of 5% wt
- powdered ceramic with a particle diameter of 25nm and a percentage content of 10% wt.

Example 2

[0026] The electric heating panel according to the second variant of its implementation has a structure similar to the electric heating panel according to the first variant of its implementation, described in the first example, and the difference between these two variants is only that in this second variant:

- the patterned ceramic layer 2 printed on the upper surface of the glass pane 1 had a thickness of g 1 = 480 μm, and the ink used for printing contained:
  - an alcohol-based solvent such as ethanol with a purity of 99% and a percentage content of 75% wt
  - ethylene glycol with a percentage content of 10% wt
  - a surfactant, preferably hexadecyltrimethylammonium bromide, with a surfactant percentage content of 25% wt
  - powdered glass frit with a particle diameter of 25 nm and a percentage content of 10% wt
- on the inner surface of the lower glass pane 3, a transparent heating layer 4 - FTO with a thickness of g3= 700 μm was applied in the pyrolytic process (PR), made using liquid precursors, in which the source material consisted of a mixture of DBTDA (tetra(n-butyl)tin and di(n-butyl)tin(iv)diacetate) (tetrabutyltin, dibutyltin octanoate) and isopropanol in a ratio of 1:5.

Examples 3 and 4

[0027] The electric heating panel according to the third variant of its implementation has a structure similar to the electric heating panel according to the first variant of its implementation, and the difference between these variants is only that in this third variant:

- the ink used for printing the patterned ceramic layer 2 on the upper surface of the glass pane 1 contained powdered ceramic with a particle diameter of 60 nm and a percentage content of 25% wt as well as powdered glass frit with a particle diameter of 60 nm and a percentage content of 25% wt
- a transparent heating layer 4 - ITO (indium-doped tin oxide) containing indium oxide doped with tin with a percentage content in the range of 8 - 16% wt and a thickness of g3 = 580 μm was applied to the upper surface of the glass pane 3 using the PVD method
- two electrodes 5, both with widths S1 = 15 mm and thicknesses g4 = 500 μm, were applied to the heating layer 4 - ITO using the high-pressure spray method with metallic nanoparticles
- a lamination polymer film 9 with a thickness of g5 = 0.85 mm was used for laminating the glass panes 1 and 3

in the subsequent fourth variant of the electric heating panel, a transparent heating layer 4 - AZO, containing zinc oxide doped with aluminium with a percentage content in the range of 2 - 6% wt and a thickness of 300 μm, was applied to the upper surface of the glass pane 3 using the ALD (Atomic Layer Deposition) method.

[0028] The principle of operation of the electric heating panel is that after attaching it, for example, to the wall of a room in an on-surface socket connected to the 230V electrical network, the plug 20 of the electrical cable 19 connected to the leads 6 of the electrodes 5 of the transparent heating layer 4 (FTO or ITO or AZO) and to the electronic control system 15 is inserted, then the button 18 is pressed to start heating the heating layer 4, and then the desired heating temperature is set using buttons 16 and 17.

Example 5

[0029] The method of manufacturing an electric heating panel with increased efficiency of converting electrical energy into thermal energy according to the invention was implemented in six consecutive stages consisting of:

- in the first stage, the glass pane 1 and the glass pane 3, both made of tempered glass, were subjected to a washing process in a water washer using demineralised water, after which

- in the second stage, a coloured (textured) ceramic layer 2 with a thickness of g1 = 50 μm was printed on the upper surface of the glass pane 1 using an industrial "INK JET" printer at a temperature of 18°C and humidity not exceeding 50%, wherein ceramic ink is used for printing, containing in its qualitative-quantitative chemical composition:

  - an alcohol-based solvent such as methanol with a purity of 99% and a percentage content of 65% wt
  - ethylene glycol with a percentage content of 15% wt
  - a surfactant, preferably hexadecyltrimethylammonium bromide, with a surfactant percentage content of 5% wt
  - powdered ceramic with a particle diameter of 25nm and a percentage content of 10% wt

  and the ceramic layer 2 printed on the glass pane 1 was subjected to a curing process at 420°C for 18 minutes, after which

- in the third stage, an oxide transparent heating layer 4 - FTO (fluorine-doped tin oxide) was applied to the upper surface of the glass pane 3 using the magnetron method (PVD) at room temperature (18-24°C), with tin oxide as the matrix and fluorine as the dopant with a percentage content in the range of 45 - 65% wt, wherein the deposited material was supplied in the form of a source target SnO_2:F in solid form with a purity of 99.99% and a melting temperature of 1626°C. The magnetron deposition process of this oxide layer was carried out for 120 seconds and involved applying material composed of ions sputtered in a magnetic field from the surface of the SnO_2:F source target to the upper cleaned surface of the glass pane 3, using the interaction of charged particles with the magnetic field, wherein the ion flux was generated as a result of bombarding the surface of this target with ionised gas molecules - argon produced by applying an electric voltage between the carrier surface and the source target, obtaining a transparent heating layer 4 - FTO with a thickness of g3 = 180 μm, on which a temperature sensor 7 with a diameter of less than 0.5mm equipped with a copper electrical wire 8 placed in a silicone sheath was deposited, and then
- in the fourth stage, two electrodes 5 with widths S1 = 3 mm and thicknesses g4 = 50 μm were deposited on the transparent heating layer 4 - FTO along both longer edges of the lower glass pane 3, wherein an ultrasonic technique is used involving plasticising the electrode material consisting of metallic strips containing 99.8% by weight of copper and their joining point with the substrate material (layer 4 - FTO) so that the particles of both these materials mixed due to vibrational movements generated by an ultrasonic head with a vibration frequency of 20kHz and power of 3900W, wherein this process is carried out at room temperature (about 20°C) at humidity below 60%, after which
- in the fifth stage, the lower surface 11 of the glass pane 3 was connected to the lower surface 13 of the housing 14 made of PET (polyethylene terephthalate) plastic, which contained an LED display 15', backlit touch buttons 16, 17 and 18, and an electronic control system 15 electrically connected - feedback with the electrodes 5 of the heating layer 4 and by electrical wire 8 with the temperature sensor 7, wherein high-temperature transparent silicone 12 with a density of 1.1 - 1.2 g/cm^3, flash point of 400°C and combustion temperature of 700°C is used for this connection, adapted to work in the temperature range from -50°C to 220°C, applied in the form of thin strips on the edges of the lower surface 13 of the housing 14 using a conical dispenser, and then the connected elements were pressed together and subjected to drying at 40°C for 10 hours, ensuring a durable and tight connection between the housing 14 and the lower surface 11 of the glass pane 3, after which
- in the sixth stage, both glass panes 1 and 3 were subjected to a lamination process in a membrane laminator at 90°C, wherein the lamination process involved placing a lamination polymer film 9 of EVA type (poly(ethylene-co-vinyl acetate)) with a thickness of g5 = 300 μm between the lower surface 10 of the glass pane 1 and the surface of the heating layer 4 - FTO deposited on the upper surface of the glass pane 3, then using vacuum pumps to evacuate air to achieve a vacuum of 0.75 bar and raising the temperature to 130°C +/- 5% at a rate of about 1°C/50 seconds, and under these conditions, maintaining temperature uniformity at 98% for the entire glass panel surface, the proper lamination process was started and conducted for 80 minutes, after which both glass panes 1 and 3 were cooled to ambient temperature of about 20°C over 60 minutes until full stabilisation of this temperature was achieved on the entire surface of both glass panes, then the vacuum pumps of the membrane laminator were turned off and atmospheric pressure was restored.

[0030] In a variant of the fourth stage of the "method" described in the fifth example, an ultrasonic head with a vibration frequency of 25kHz and power of 4100W was used for electrode deposition

Example 6

[0031] The method of manufacturing an electric heating panel with increased efficiency of converting electrical energy into thermal energy according to the invention was also implemented in six consecutive stages consisting of:

- in the first stage, the glass pane 1 and the glass pane 3, both made of tempered glass, were subjected to a washing process in a water washer using demineralised water, after which
- in the second stage, a coloured (textured) ceramic layer 2 with a thickness of g1 = 480 μm was printed on the upper surface of the glass pane 1 using an industrial "INK JET" printer at a temperature of 21 °C and humidity not exceeding 50%, wherein ceramic ink is used for printing, containing in its qualitative-quantitative chemical composition:
    - an alcohol-based solvent such as ethanol with a purity of 99% and a percentage content of 75% wt
    - ethylene glycol with a percentage content of 10% wt
    - surfactant, preferably hexadecyltrimethylammonium bromide, with a surfactant percentage content of 25% wt
    - powdered glass frit with a particle diameter of 25 nm and a percentage content of 10% wt

and the ceramic layer 2 printed on the glass pane 1 was subjected to a curing process at 550°C for 12 minutes, after which

- in the third stage, an oxide layer 4 - FTO (fluorine-doped tin oxide) was applied to the upper surface of the glass pane 3 using the magnetron method (PVD) at room temperature (18-24°C), with tin oxide as the matrix and fluorine as the dopant with a percentage content in the range of 45 - 65% wt, wherein the deposited material was supplied in the form of a source target SnO_2:F in solid form with a purity of 99.99% and a melting temperature of 1650°C. The magnetron deposition process of this oxide layer was conducted for 360 seconds and involved applying material composed of ions sputtered in a magnetic field from the surface of the SnO_2:F source target to the upper cleaned surface of the glass pane 3, using the interaction of charged particles with the magnetic field, wherein the ion flux was generated by bombarding the surface of this target with ionised gas molecules - argon produced by applying an electric voltage between the carrier surface and the source target, obtaining a transparent heating layer 4 - FTO with a thickness of g3 = 580 μm, on which a temperature sensor 7 with a diameter of less than 0.5mm equipped with a copper electrical wire 8 placed in a silicone sheath was deposited, and then
- in the fourth stage, two electrodes 5 with widths S1 = 15 mm and thicknesses g4 = 500 μm were deposited on the transparent heating layer 4 - FTO along both longer edges of the lower glass pane 3 using high-pressure spray with metallic copper nanoparticles, wherein this process was conducted at room temperature (about 20°C) with humidity below 60%, after which
- in the fifth stage, the lower surface 11 of the glass pane 3 was connected to the lower surface 13 of the housing 14 made of PTEE (polyethylene terephthalate), which contained an LED display 15', backlit touch buttons 16, 17, and 18, and an electronic control system 15 electrically connected - feedback with the electrodes 5 of the heating layer 4 and by electrical wire 8 with the temperature sensor 7, wherein high-temperature transparent silicone 12 with a density of 1.1 - 1.2 g/cm^3, a flash point of 400°C and a combustion temperature of 700°C is used for this connection, adapted to work in the temperature range from -50°C to 220°C, applied in the form of thin strips on the edges of the lower surface 13 of the housing 14 using a conical dispenser, and then the connected elements were pressed together and subjected to drying at 65°C for 8 hours, ensuring a durable and tight connection between the housing 14 and the lower surface 11 of the glass pane 3, after which
- in the sixth stage, both glass panes 1 and 3 were subjected to a lamination process in a membrane laminator at 120°C, wherein the lamination process involved placing a lamination polymer film 9 of EVA type (poly(ethylene-co-vinyl acetate)) with a thickness of g5 = 0.85 mm between the lower surface 10 of the upper glass pane 1 and the surface of the heating layer 4 - FTO deposited on the upper surface of the glass pane 3, then using vacuum pumps to evacuate air to achieve a vacuum of 0.75 bar and raising the temperature to 130°C +/- 5% at a rate of about 1°C/50 seconds, and under these conditions, maintaining temperature uniformity at 98% for the entire glass panel surface, the proper lamination process was started and conducted for 50 minutes, after which both glass panes 1 and 3 were cooled to ambient temperature of about 20°C over 70 minutes until full stabilisation of this temperature was achieved on the entire surface of both glass panes, then the vacuum pumps of the membrane laminator were turned off and atmospheric pressure was restored.

[0032] In a variant of the second stage of the "method" described above in the sixth example, instead of powdered glass frit with a particle diameter of 25 nm and a percentage content of 10% wt, powdered ceramic together with powdered glass frit with particle diameters of 60nm and a percentage content of 25% wt was used.

Example 7

[0033] The method of manufacturing an electric heating panel with increased efficiency of converting electrical energy into thermal energy according to the invention was also implemented in six consecutive stages similar to those described in the fifth and sixth examples, and the

difference between these methods was only that in this seventh example of the method of manufacturing this panel, its third stage involved:

- applying the heating layer 4 - FTO to the previously cleaned upper surface of the glass pane 3 in a pisolitic (PR) vaporisation process from liquid precursors, in which the source material consisted of a mixture of DBTDA (tetra(n-butyl)tin, di(n-butyl)tin(iv) diacetate) (tetrabutyltin, dibutyltin octanoate) and isopropanol in a ratio of 1:5, wherein to this prepared solution in the amount of 550 ml heated to 35°C, a solution of NH_4F and distilled water in a ratio of 0.8g/2.5 ml in the amount of 150 ml was added, and then this prepared solution was mixed for about 15 minutes to obtain a clear solution. The obtained clear solution - precursor was uniformly applied to the entire surface of the glass pane 3, heated to 155°C, using spray nozzles positioned 12-15 cm from the upper surface of the glass pane, after which this pane was annealed at 250°C for 10 min, obtaining a durable connection of the precursor with the surface of this pane, and at the same time a transparent heating layer 4 - FTO with a thickness of g3 = 700 μm.

Example 8

[0034] The method of manufacturing an electric heating panel with increased efficiency of converting electrical energy into thermal energy according to the invention was also implemented in six consecutive stages similar to those described in the fifth and sixth examples, and the difference between these methods was only that in this eighth example of the method of manufacturing this panel, its third stage involved:

- applying the oxide heating layer 4 - ITO (indium-doped tin oxide) to the previously cleaned upper surface of the glass pane 3 using the magnetron method (PVD) from a source target with a composition containing 90% In_2O_3 - indium oxide (III) and 10% SnO_2 - tin oxide (IV). The deposition of this oxide layer 4 - ITO was conducted using a PVD magnetron sputterer with a power of 1.55 kW at a temperature of 350°C and for 900 seconds at a process pressure of 0.75 Pa, wherein a gas mixture composed of argon in the amount of 95.5% to 97% and oxygen in the amount of 3% to 4.5% is used in this process, obtaining a transparent heating layer 4 - ITO with a thickness of g3 = 580 μm.

Example 9

[0035] The method of manufacturing an electric heating panel with increased efficiency of converting electrical energy into thermal energy according to the invention was also implemented in six consecutive stages similar to those described in the fifth and sixth examples, and the difference between these methods was only that in this ninth example of the method of manufacturing this panel, its third stage involved:

- applying the oxide transparent heating layer 4 - AZO from zinc oxide (ZnO) doped with aluminium during the growth stage of this layer to the previously cleaned upper surface of the glass pane 3 using the ALD (Atomic Layer Deposition) technique. The application of this layer using the ALD technique involved the sequential alternating delivery of chemical reagents to the upper surface of the glass pane 3, wherein the process was implemented by adsorption of the reagent to the substrate surface and by a chemical reaction occurring between the adsorbed reagent and the reactive gases - precursors: diethylzinc 99% (known as DEZ) and trimethylaluminium (known as TMA). To produce this heating layer 4, two gaseous precursors were used, namely diethylzinc (DEZ) with a molar mass of 123.5 g/mol, trimethylaluminium (TMA) with a molar mass of 114.18 g/mol, and water (H_2O). This process was conducted at a temperature of 200°C for 1100 cycles with flow rates set to: 10000 sccm for N_2, 1000 for DEZ at room temperature, 100 for TMA at room temperature, and 1500 for H_2O heated to 35°C, wherein nitrogen is used as an inert gas to flush the chamber after each cycle. The transparent heating layer 4 - AZO obtained in this stage had a thickness of 300 μm.

Claims

1. The electric heating panel with increased efficiency of converting electrical energy into thermal energy obtained by the method described in claims 7-12, having two tempered glass panes laminated together with a lamination film, one of which has an electrically conductive (heating) layer, inseparably connected to electrodes placed along both opposite edges of this layer made of electrically conductive metals and connected to an electrical wire supplying power from a 230V electrical source, and the other glass pane has a patterned ceramic print layer on its surface, **characterised in that** it consists of a glass pane (1) with a textured ceramic layer (2) printed on its upper surface with a thickness of g1 = 50 μm - 480 μm and a glass pane (3) with a transparent heating layer (4) - FTO, ITO, AZO with a thickness of g3 = 180 μm - 700 μm deposited on its upper surface, comprising metal oxides: tin, zinc, indium, wherein two electrodes (5) with a width of S1 = 3mm - 15mm and a thickness of g4 = 50 μm - 500 μm and resistances per 1 m not exceeding 1 Ω are deposited on the heating layer (4), with one end of each electrode connected to electrical contact leads (6), and further, a temperature sensor (7) connected by a copper

electrical wire (8) to an externally powered control system (15) is deposited on the heating layer (4), housed in a plastic casing (14) inseparably connected to the lower surface of the glass pane (3), and additionally, the lower surface (10) of the glass pane (1) and the heating layer (4) deposited on the upper surface of the glass pane (3) are laminated together using a lamination polymer film (9) with a thickness of g5 = 300 μm - 0.85mm.

2. The electric heating panel according to claim 1 **characterised in that** the heating layer (4) - FTO applied by the magnetron method (PVD) consists of doped metal oxides, with tin oxide as the matrix and fluorine as the dopant with a percentage content of 45% - 65% wt.

3. The electric heating panel according to claim 1, **characterised in that** the heating layer (4) - FTO applied in the pisolitic (PR) vaporisation process from liquid precursors consists of a mixture of DBTDA (tetra(n-butyl)tin and di(n-butyl)tin(iv)diacetate) (tetrabutyltin, dibutyltin octanoate) and isopropanol in a ratio of 1:5.

4. The electric heating panel according to claim 1, **characterised in that** the heating layer (4) - ITO applied by the magnetron method (PVD) consists of indium oxide doped with tin with a percentage content of 8% - 16% wt.

5. The electric heating panel according to claim 1, **characterised in that** the heating layer (4) - AZO applied by the ALD method consists of zinc oxide doped with aluminium with a percentage content of 2% - 6% wt.

6. The electric heating panel according to claim 1, **characterised in that** the textured ceramic layer (2) consists of ceramic ink containing in its qualitative-quantitative chemical composition:

- an alcohol-based solvent with a purity of 99% and a percentage content of 65% - 75% wt
- ethylene glycol with a percentage content of 10% - 15% wt
- hexadecyltrimethylammonium bromide with a surfactant percentage content of 5% to 25% wt

- powdered ceramic with a particle diameter of 25 nm - 60 nm and a percentage content of 10% wt - 25% wt, and/or powdered glass frit with a particle diameter of 25 nm - 60 nm and a percentage content of 10% wt - 25% wt.

7. The electric heating panel according to claim 1, **characterised in that** the lower surface (11) of the glass pane (3) is connected to the lower surface (13) of the rectangular housing (14) using high-temperature transparent silicone (12) with a density of 1.1 - 1.2 g/cm^3, a flash point of 400°C and a combustion temperature of 700°C.

8. The method of manufacturing an electric heating panel with increased efficiency of converting electrical energy into thermal energy, **characterised in that** it is being implemented in six consecutive stages consisting of:

- in the first stage, the glass panes (1 and 3) are subjected to a washing process in a water washer using demineralised water, after which
- in the second stage, a textured ceramic layer (2) with a thickness of g1 = 50 μm - 480 μm is printed on the upper surface of the glass pane (1) using an INK JET printer with ceramic ink at a temperature of 18°C - 21°C and humidity not exceeding 50%, after which the printed ceramic layer (2) is subjected to a curing process at 420°C - 550°C for 12 to 18 minutes, after which
- in the third stage, an oxide transparent heating layer (4) - FTO is deposited on the upper surface of the glass pane (3) using the PVD magnetron technique at room temperature 18°C - 24°C, with a thickness of g3 = 180 μm - 580 μm, for 120-360 seconds, wherein the deposited material is a source target in the form of tin oxide doped with fluorine with a percentage content in the range of 45% - 65% wt (SnO_2:F) in solid form with a purity of 99.99% and a melting temperature of 1625°C - 1650°C. In the magnetron deposition process of this heating layer (4), the interaction of charged particles with the magnetic field is used, where the ion flux is generated by bombarding the surface of the source target with ionised gas molecules - argon produced by applying an electric voltage between the carrier surface and the source target. Then, a temperature sensor (7) with a diameter of less than 0.5mm equipped with a copper electrical wire (8) placed in a silicone sheath is placed on the heating layer (4), and then
- in the fourth stage, two metallic electrodes (5) with widths S1 = 3mm - 15 mm and thicknesses g4 = 50 μm - 500 μm containing 99.8% by weight of copper are deposited on the heating layer (4) along both longer edges of the glass pane (3) using the ultrasonic technique, plasticising the electrode material and their connection point with the heating layer (4) so that the particles of both these materials mix due to vibrational movements generated by an ultrasonic head with a vibration frequency of 20kHz - 25 kHz and power of 3900 W - 4100 W, wherein this process is conducted at room temperature 20°C

- 24°C with humidity not exceeding 60%, after which
- in the fifth stage, the lower surface (11) of the glass pane (3) is connected to the lower surface (13) of the plastic housing (14) using transparent silicone (12). This housing contains an LED display (15'), backlit touch buttons (16, 17, and 18), and an electronic control system (15), which is electrically connected - feedback with the electrodes (5) of the heating layer (4) and the electrical wire (8) with the temperature sensor (7). The connected elements are then dried at a temperature of 40°C - 65°C for 8 to 10 hours, and then
- in the sixth stage, both glass panes (1 and 3) are subjected to a lamination process in a membrane laminator at a temperature of 90°C - 135°C, for 50min - 80min, using a lamination polymer film (9) of EVA type (poly(ethylene-co-vinyl acetate)) with a thickness of g5 = 300 μm to 0.85nm, placed between the lower surface (10) of the glass pane (1) and the heating layer (4) of the glass pane (3), wherein this process involves evacuating air using vacuum pumps to achieve a vacuum of 0.75 bar and raising the temperature to 130°C +/- 5% at a rate of about 1°C/50 seconds, and under these conditions, maintaining temperature uniformity at 98% for the entire glass panel surface. Then both glass panes (1 and 3) are cooled to ambient temperature of 20°C - 24°C over 50 to 60 minutes until full stabilisation of this temperature is achieved on the entire surface of both glass panes, then the vacuum pumps of the membrane laminator are turned off and atmospheric pressure is restored.

9. The method according to claim 8, **characterised in that** the ceramic ink used to print the ceramic layer (2) contains in its qualitative-quantitative chemical composition

- an alcohol-based solvent with a purity of 99% and a percentage content of 65% - 75% wt
- ethylene glycol with a percentage content of 10% - 15% wt
- hexadecyltrimethylammonium bromide with a surfactant percentage content of 5% to 25% wt
- powdered ceramic with a particle diameter of 25 nm - 60 nm with a percentage content of 10% to 25% wt, or
- powdered glass frit with a particle diameter of 25 nm - 60 nm with a percentage content of 10% to 25% wt, or
- powdered ceramic together with powdered glass frit with particle diameters of 25 nm - 60 nm and a percentage content of 10% to 25% wt

10. The method according to claim 8, **characterised in that** in the third stage, an oxide transparent heating layer (4) - FTO with a thickness of g3 = 700 μm is applied to the previously cleaned upper surface of the glass pane (3) in a pisolitic (PR) vaporisation process from liquid precursors, in which the source material consists of a mixture of DBTDA (tetra(n-butyl)tin, di(n-butyl)tin(iv)diacetate) (tetrabutyltin, dibutyltin octanoate) and isopropanol in a ratio of 1:5 in the amount of 550 ml heated to 35°C, to which a solution of NH_4F and distilled water in a ratio of 0.8g/2.5 ml in the amount of 150 ml is added and mixed for 15 minutes to obtain a clear solution, after which the obtained precursor is uniformly applied to the entire surface of the glass pane, heated to 155°C, using spray nozzles positioned 12-15 cm from the upper surface of the glass pane (3), after which this pane is annealed at 250°C for 10 min, obtaining a durable connection of the precursor with the surface of the glass pane (3).

11. The method according to claim 8, **characterised in that** in the third stage, an oxide transparent heating layer (4) - ITO with a thickness of g3 = 580 μm is applied to the previously cleaned upper surface of the glass pane (3) using the PVD magnetron sputtering technique from a source target with a composition containing 90% indium oxide (III) and 10% tin oxide (IV), wherein this process is conducted using a PVD magnetron sputterer with a power of 1.55 KW at a temperature of 350°C and for 900 seconds at a process pressure of 0.75 Pa, using a gas mixture composed of 95.5% - 97% argon and 3% - 4.5% oxygen.

12. The method according to claim 8, **characterised in that** in the third stage, an oxide transparent heating layer (4) - AZO from zinc oxide (ZnO) doped with aluminium with a thickness of g3 = 300 μm is applied to the previously cleaned upper surface of the glass pane (3) using the ALD technique, through sequential alternating delivery of chemical reagents to the upper surface of the glass pane (3), wherein the process is implemented by adsorption of the reagent to the substrate surface and by a chemical reaction occurring between the adsorbed reagent and the reactive gases - gaseous-precursors: diethylzinc (DEZ) 99% with a molar mass of 123.5 g/mol, trimethylaluminium (TMA) 99% with a molar mass of 114.18 g/mol, and water, wherein this process is conducted at a temperature of 200°C for 1100 cycles with flow rates set to: 10000 sccm for N_2, 1000 for diethylzinc (DEZ) at room temperature, 100 for trimethylaluminium (TMA) at room temperature, and 1500 for water (H_2O) heated to 35°C, using nitrogen as an inert gas to flush the chamber after each cycle.

13. The method according to claim 8, **characterised in that** the transparent silicone (12) used to connect the

plastic housing (14) to the glass pane (3) is adapted to work in the temperature range from -50°C - 220°C and has a density of 1.1 - 1.2 g/cm^3, a flash point of 400°C and a combustion temperature of 700°C.

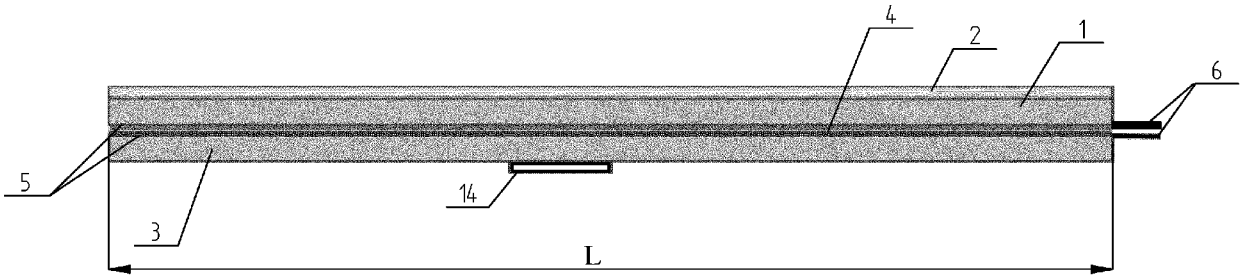

Fig. 1

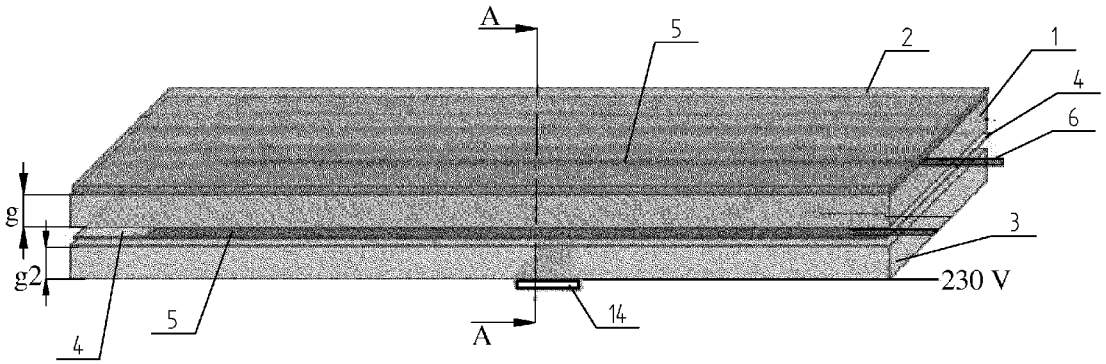

Fig. 2

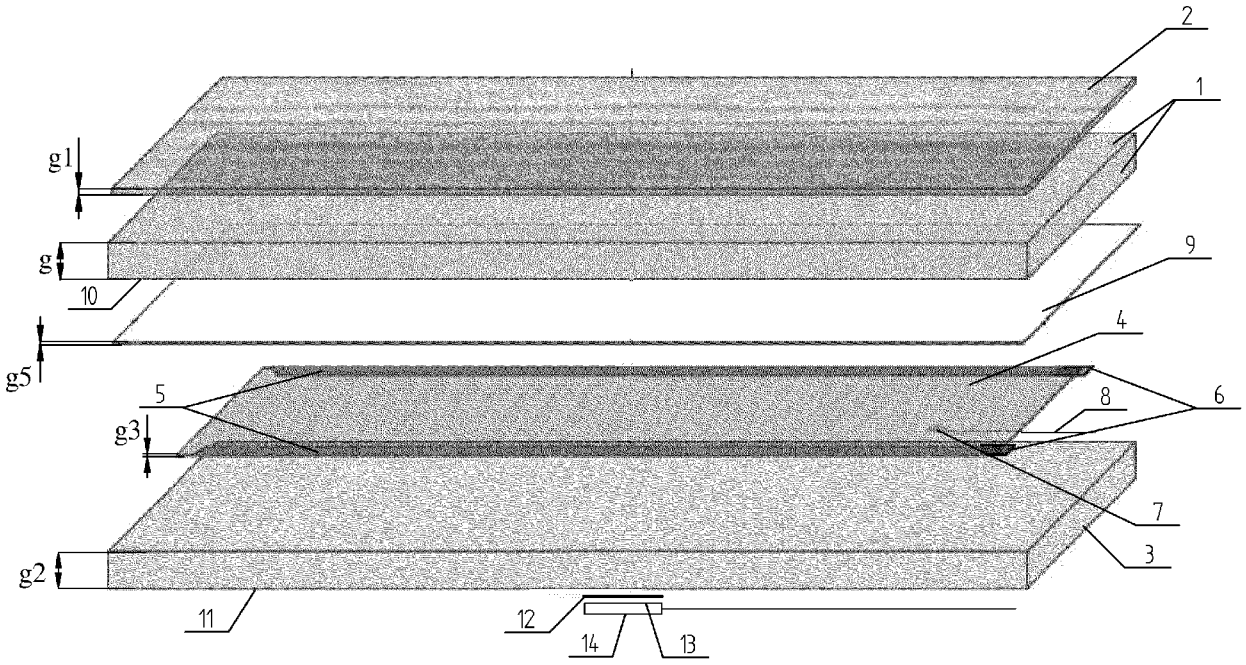

Fig. 3

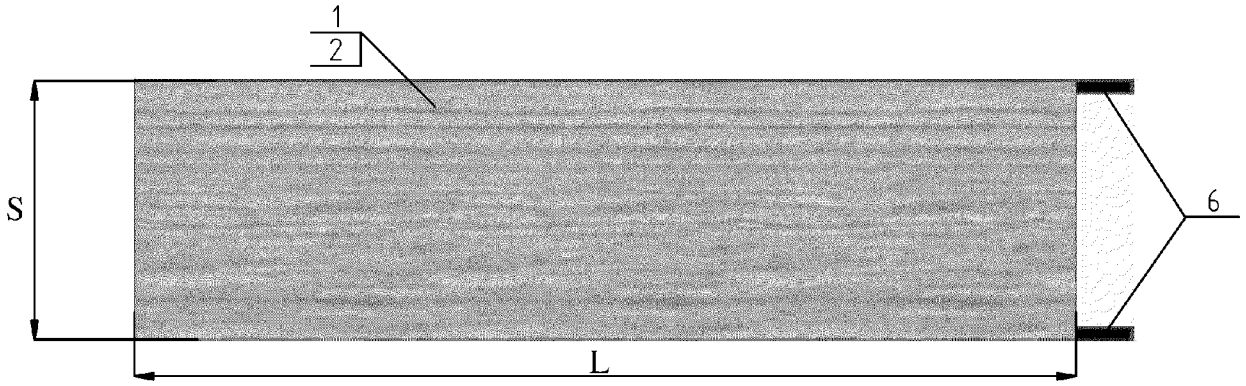

Fig. 4

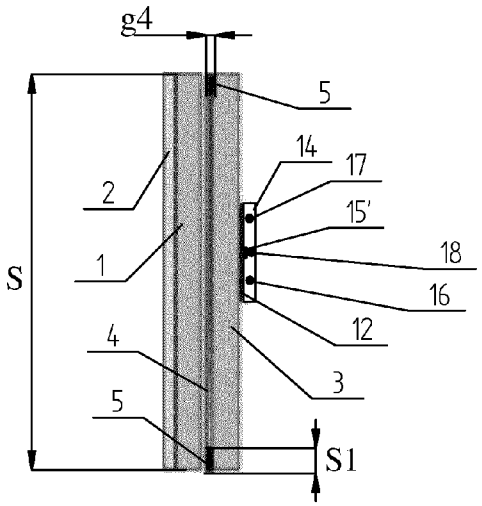

Fig. 5

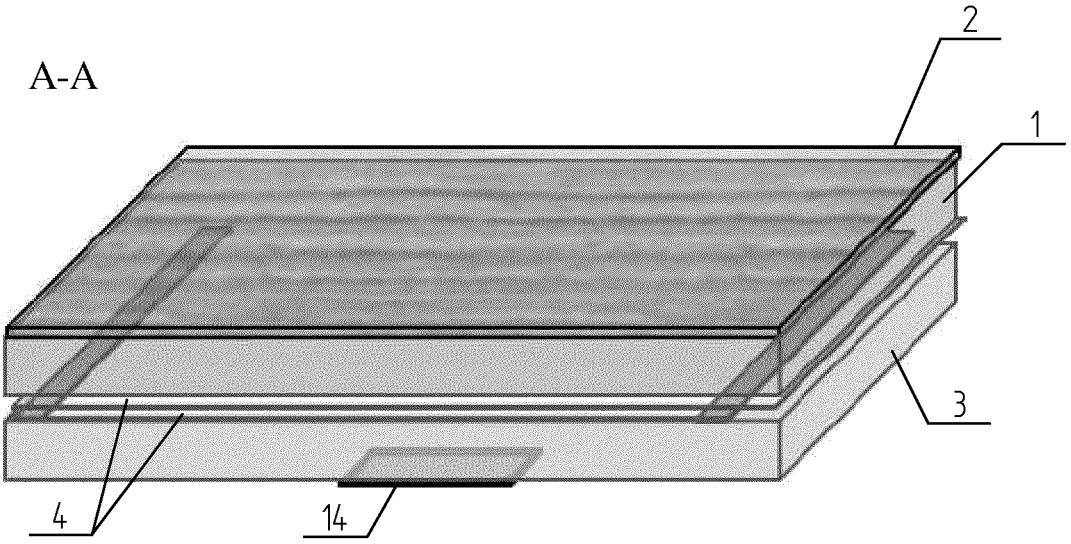

Fig. 6

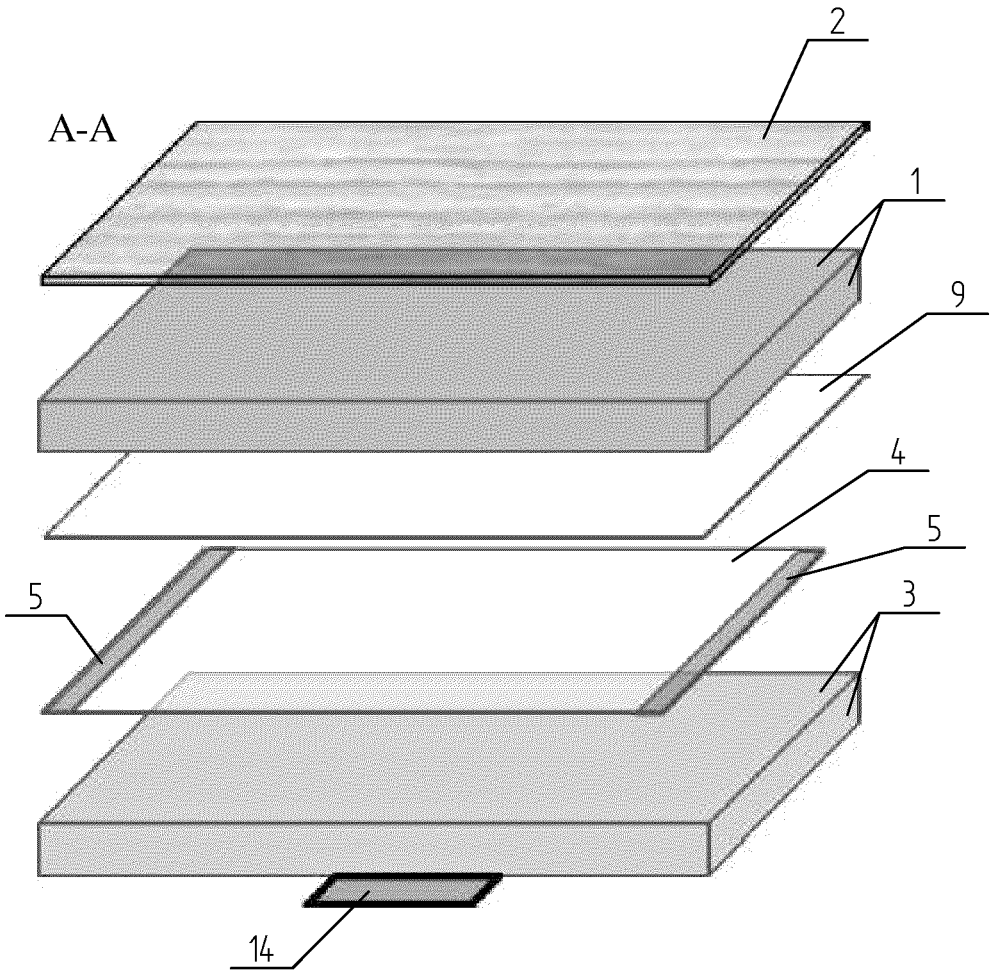

Fig. 7

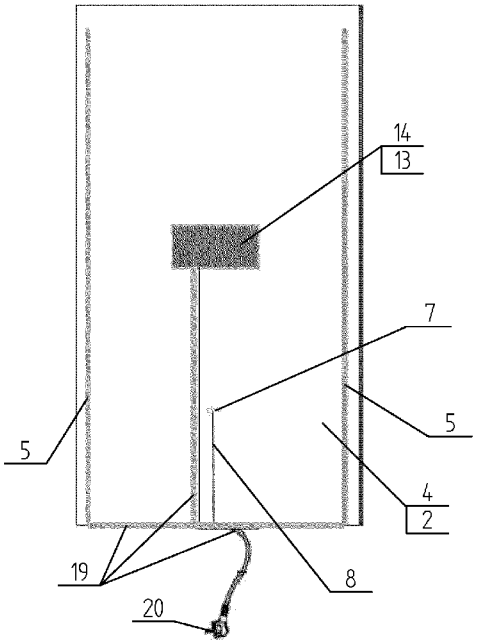

Fig. 8

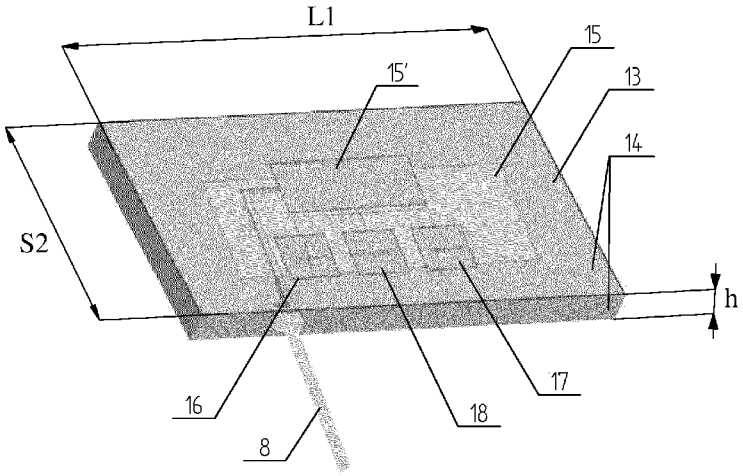

Fig. 9

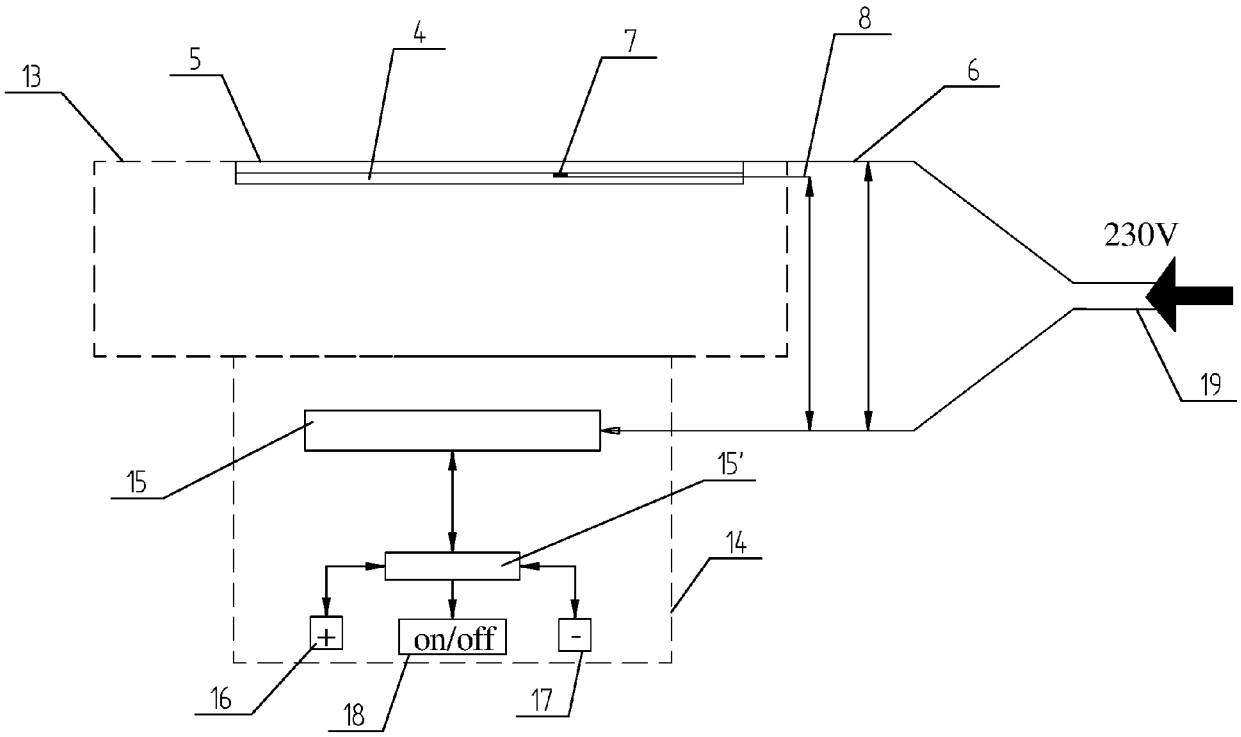

Fig. 10

REFERENCES CITED IN THE DESCRIPTION

This list of references cited by the applicant is for the reader's convenience only. It does not form part of the European patent document. Even though great care has been taken in compiling the references, errors or omissions cannot be excluded and the EPO disclaims all liability in this regard.

Patent documents cited in the description

- PL 223597 B1 **[0002]**
- PL W128602 **[0003]**
- PL W125636 **[0004]**
- EP 2758351 B1 **[0005]**
- EP 0025755 A1 **[0006]**
- EP 2274251 A **[0007]**