May 25, 1948. D. N. HALSTEAD 2,442,126

COMBINATION OPENER, LID, AND POURING SPOUT DEVICE

Filed Oct. 2, 1943

Fig. 1

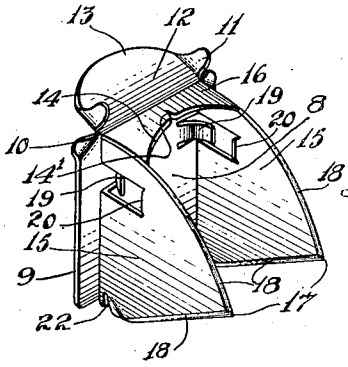

Fig. 2

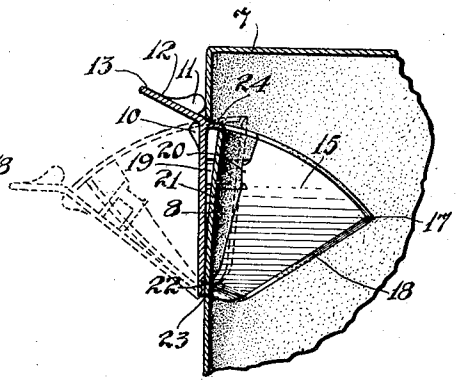

Fig. 3

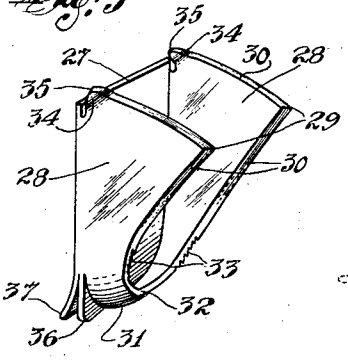

Fig. 4

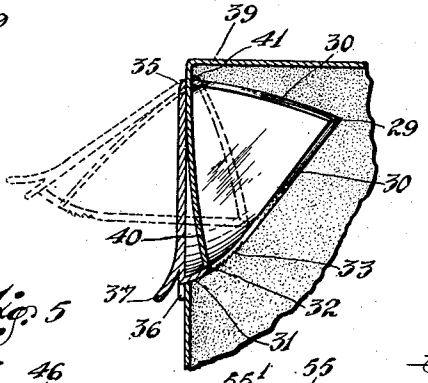

Fig. 5

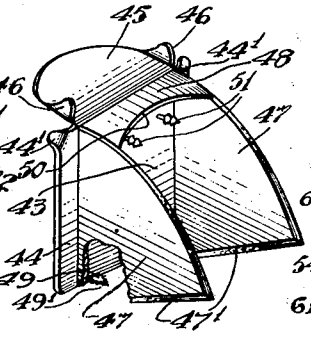

Fig. 7

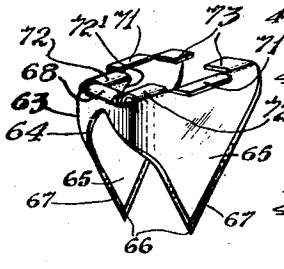

Fig. 6

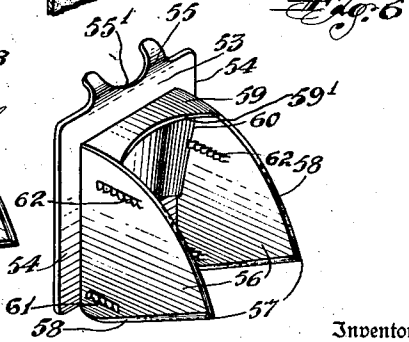

Inventor

Donne N. Halstead.

Patented May 25, 1948

2,442,126

UNITED STATES PATENT OFFICE

2,442,126

COMBINATION OPENER, LID, AND POURING SPOUT DEVICE

Dorne N. Halstead, Upper Montclair, N. J.

Application October 2, 1943, Serial No. 504,692

7 Claims. (Cl. 222—81)

1

The invention in this application relates to a combination opener, lid and pouring spout device of the type which may be successively used to open cardboard containers or the like and which functions both as a lid and pouring spout device.

One of the primary objects of my invention is to provide a pouring spout device with side and end cutting means, which may be readily pressed into the wall of containers to cut a hinging tab and a form fitting opening for the device to engage and rock in.

Another important object of the invention is to provide a lid opener device of the character described with means thereon whereby it will securely and automatically anchor or bind itself to the tab portion of a container when it is pressed against the side of the container to provide a hinge for the lid to rock on.

A further object of the invention is to provide means which will not only positively and automatically lock or bind the lid opener to the tab portion of a container by a single pressing in operation but also to make said locking means such that the device may be readily disconnected or removed from the tab and container for successive use on other containers.

Another important object of my invention is to provide means whereby the free end of the tab is transversely shaped when it is being cut to substantially conform to the contour of the front end cutting edge of the device to provide a freely flowing channel like spout.

These and other objects and advantages are accomplished by constructions and embodiments hereinafter described and illustrated by the accompanying drawings, in which—

Fig. 1 is an isometric view of one embodiment of my invention;

Fig. 2 is a section through the above embodiment shown associated with the upper portion of a box in section;

Fig. 3 is an isometric view of another embodiment of the invention;

Fig. 4 is a section through the second embodiment of the invention shown associated with the upper portion of a box in section;

Figs. 5, 6 and 7 are isometric views of other embodiments of the invention.

Referring to Figs. 1 and 2 of the drawing, 7 is a section of a box having one embodiment of my device applied at the upper portion of one side thereof, also dotted in to show it in an open position. This device has a back or base member 8, having side sealing flanges 9 with their

2

front corners bent outwardly at 10 so that they will not mutilate the wall of the box upon applying the device thereto. The back member has a curved handle portion 12 at its forward end, which has a lip 13 and side portions 11 for directing the flowing of the box contents over the forward portion of the device when open. On the back member 8 are outwardly extending side cutting members or blades 15, and a front end cutting member or blade 16. The side cutting members 15 have pointed ends 17 and cutting edges 18 on the front and rear portions thereof.

Extending inwardly at the front portion of the base 8 are curved tab butting or channel shaping prongs 19, and opposed thereto on the side blades 15 are inwardly projecting prongs 20 for binding or locking the free end of the tab 21 thereto. At the rear end of the side cutting members 15 slightly spaced from the base member 8 approximately the thickness of the side walls of cereal box containers and the like are inwardly projecting members 22 for automatically locking or binding the rear end of the device to the base of the tab 21 to provide a hinge at 23. The front or forward cutting member 16 has a substantially arch shaped cutting edge 14, and a centrally disposed retarded tab cutting notch 14'.

To use this embodiment of my invention, the points 17 are placed against the wall of a container near the top of the side thereof and then upon pressing inwardly, the blades will penetrate the wall of a box to cut a tab and form fitting opening. The pressing in operation also effects an automatic locking engagement of the rear members 22 with the base of the tab; also, automatic locking engagement of the front members 19 and 20 is effected with the free end of the tab to provide a hinge for the device whereby it can be rocked back and forth on the box by the handle member 12. The arcuate channel shaped butting members 19 transversely shape the free end of the tab as it is being cut by the front cutting edge 24 to substantially conform to the contour of the edge to provide a freely flowing spout. To disconnect this device from a container when emptied, it is rocked to an open position and then upon pulling the device endwise in direction of the length of the tab, it is readily stripped therefrom for successive use on another container.

Referring to Figs. 3 and 4, the device is embodied in a back or base member 27, having outwardly projecting side blade members 28, with pointed ends 29, and front and rear cutting edges 30 thereon. The front or forward portion of the

side blades merge into a substantially arcuate shaped end member 31, having an arcuate shaped cutting edge 32 butting or merging into the front side edges 30. It will be observed that the front end cutting member 31 inclines slightly rearwardly for purposes more fully hereinafter described, and that the merging cutting edges of the side and front members have sharp saw like teeth 33 thereon to facilitate the cutting action.

The rear base portions 34 of the side cutting blades extend beyond the rear end of the base member 27 and are slightly beveled off at 35 and incline inwardly for purpose more fully hereinafter set forth. The base member at its forward portion has a gauge flange 36, which may extend around the side edges of the device, the same as shown in Figs. 1 and 2, to insure sealing the opening. The device is also provided at its forward end with an outwardly curved operating handle 37.

In using this embodiment of my invention, it is preferably pressed through one of the upper side walls of a box with the rear base portion of the side cutting blade adjacent to the top of the box to cut a tab 40, which hinges at 41 to the edge of the box, and the fact that the rear end of the base member 27 is short of the rear base portions 34 of the side cutting blades facilitates the application of the device to the box; also the hinging action on the edge of the box. With this embodiment of the invention, the inturned ends engage the side edges of the tab to lock and bind it against the rear end of the base member 27 when the cutting blades are fully pressed into the box. The rounded or curved shape of the front or forward cutting member 31, along with the rear inclination thereof, insures that the free end of the tab is automatically locked or bound to the forward end of the device when the cutting blades are fully pressed into the box to cut the tab. The curved shape and rear inclination of the front member 31 also tends to transversely channel shape the free end of the tab to conform to the contour of the front cutting edge to provide a freely flowing spout.

This device may be readily stripped from the tab in the same manner as the first embodiment, and since the forward cutting edge is curved or arch shaped, it will cut an opening having a curved lower side, which facilitates the pouring of the contents from the container when using this embodiment of the invention in the manner disclosed, in which the device does not function as a pouring chute.

In the embodiment of the invention disclosed in Fig. 5, the base or back member 43 has side sealing flanges 44 with outwardly bent front corners 44' to prevent multilation of the box upon pressing the device into the wall of the box. At its front end, the back member 43 is curved outwardly to provide a pouring lip and handle member 45, which has side flanges 46 to provide a front pouring spout for directing the contents of a box. Extending outwardly from the back member 43 are side blades 47, having front and rear cutting edges 47' and a front end member 48 with a curved shaped cutting edge 50, which merges or butts at its ends into the front cutting edges 47' on the side blades.

On the rear end portion of the back member 43, are inwardly extending tab locking members 49 having barbed penetrating prongs 49' for penetrating and anchoring the base end of the tab to the device. On the front end of the back member 43 are similar inwardly projecting barbed penetrating members 51 for locking the device to the free or severed end of the tab. These barbed anchoring prongs are long enough so that they will penetrate through the tab to insure automatic anchoring of the device to the tab before it is completely severed at its free end.

In the embodiment of the invention disclosed in Fig. 6, the back member 53 is provided with edge sealing and gauging flanges 54 and a front outwardly turned pouring lip and handle portion 55, cut away at 55' to allow the contents of the box to flow freely over the same. Projecting outwardly from base member 53 are spaced blades 56 having piercing points 57 and front and rear cutting edges 58 thereon. Projecting outwardly from the front or forward end of the base member is an end cutting blade 59, having a curved or arched shaped cutting edge 59', which butts or merges at its outer ends into the front side cutting edges 58. The spaced cutting blades 56 have on the rear inside portions thereof inwardly projecting ratchet shaped members 61 for anchoring the rear end of the device to the base of the tab when it is being cut. Also at the front or forward base portion of the side blades are similar ratchet like members 62 for automatically locking the forward end of the device to the free end of the tab before it is completely cut. Both the front and rear ratchet members may be either rigidly or resiliently mounted upon the side cutting blades.

It will be observed that this embodiment of my invention has a channel shaped base member 60 at its forward end spaced slightly below the forward curved cutting edge. This channel shaped base member not only transversely dishes the free end of the tab but also limits the inward movement of end of the tab so that it is maintained substantially flush with said curved edge 59' to provide a freely flowing channel way.

With this modification, the rear end of the device may be automatically anchored to the base of the tab with the rear end of the base member in contact therewith; or the rear end of the device may be anchored to the base of the tab, spaced from the back member by being held between any two adjacent ratchets on the spaced cutting blades, depending upon how far the device is pressed into the box when cutting the opening.

In the embodiment of my invention disclosed in Fig. 7, the device comprises a rounded front end member 63 having a curved or arched shaped cutting edge 64, and spaced side blades 65 having penetrating points 66, and front and rear cutting edges 67. At the top of the front end of the device is an outwardly and rearwardly inclined lip or operating handle 68, and extending laterally from the top side edges of the device are stop flanges 71. Also on the front end base portion of the device are inwardly extending members 72 having downwardly extending arched shaped tab butting members 72' for channel shaping the free end of the tab to substantially conform to the contour of the front cutting edge.

At the rear end of the device are inwardly extending stop flanges or members 73 for engaging the back of the tab, said flange members may be connected together. With this embodiment of my invention, the binding of the tab to the inside of the device when it is being cut to provide a hinge therefor is effected by using a sheet metal of a thicker gauge than used to make the other embodiments and sharpening the cutting blades by giving them a substantial beveling from their insides outwardly, whereby an over sized tab will

be cut depending upon the amount of beveling and the thickness of the blades. This over sized tab will be tightly wedged in between the blades as it is being cut to automatically lock the device to the tab. This binding action may be further ensured by having the rear ends of the blades converged towards each other.

The free end of the tab, by reason of the curved arched shape of the front cutting edge will not be completely severed until the tab reaches the most suitable hinged locking position for the device. At this position the tab is completely severed at its free end and, since it is no longer anchored at both its ends, the tight wedged in gripping action is then sufficient to lock the device automatically to the tab to provide an operative hinge therefor on the container.

In most of the embodiments of my invention, the automatic tab locking means at the rear end of the devices are preferably positioned such that they lock the device to the base of the tab when the rear end of the base member engages therewith, thereby firmly locking the rear end of the device to the base of the tab at the most effective point to provide a practical and efficient hinge therefor. However, as disclosed in Fig. 6, there may be a series of tab ratchets or serrations on the inside rear portions of the spaced cutting blades for locking the tab to the device at any desired position.

It will be also noted that the automatic locking means at the front end of all the embodiments of my invention are so positioned that they come into operative locking engagement with the tab before it is completely severed at its front end, thereby insuring that the severed or free end of the tab is securely locked to the front end of the device to rock back and forth therewith.

The cutting edge on the front blade member in all embodiments is preferably curved and arch shaped; however, other shapes may be used to provide a suitable pouring opening, and preferably at the closest point which said front edge approaches the back member of the device, it is slightly spaced therefrom, which facilitates the cutting and severing of the free ends of the tab when the device is pressed against the wall of a container. The fact that the front locking members come into operative butting and locking contact with the front side portions of the tab when the front cutting edge starts to cut inwardly from the spaced side edges to the transverse center thereof tends to transversely dish the free end of the tab to substantially conform to the contour of the front cutting edge to provide a substantially rounded freely flowing channel way. This channeling of the free end of the tab is further facilitated by the inwardly projecting forming members 19, disclosed in Figs. 1 and 2, the inwardly curved members 72 in Fig. 7 and the channel shaped member 69, disclosed in Fig. 6.

Preferably to insure locking of the device to the tabs when they are being cut, inwardly projecting locking means have been disclosed for effecting this binding or anchoring action; however, locking engagement may be effected by having the cutting blades slightly divergent toward their pointed ends, which results in cutting a tab slightly oversize upon the starting or initial cutting of the tab, which results in a wedging or binding engagement of the central portion of the tab between the spaced blades as the device is pressed into the box. This locking or binding action may also be effected by having the base

portions of the spaced blades thicker and tapering therefrom to a thinner gauge towards their pointed ends and, consequently, at the start of cutting of the opening a slightly oversize tab is cut, which is wedged in between the base portions of the cutting blades to effect a locking engagement of the tab as they are pressed into the box. This thicker gauge at the base portions of the spaced cutting blades also insures a firmer binding engagement of the device in the opening cut in the box upon closing the lid. In connection with these oversize tab locking means, the insides of the cutting blades at their base portions may be successively rasped or serrated to more firmly grip the side edges of the tab.

With the preferred form of invention, the distance or radius from the rear end of the base or back member to the penetrating points of the side cutting blades slightly exceeds the length of the side slots cut by the spaced side blades whereby the ends of the cutting blades will come in contact with the ends of the slot to limit the outward rocking movement of the device when the rear cutting edges of the side blades are substantially flush with the inside wall of the opening in the box to provide a freely flowing opening. Also not in any instance does the distance from the rear end of the base member to any place on the front cutting edges on the spaced cutting blades between their penetrating ends and base ends exceed the above specified radius.

With the modifications disclosed in Figs. 3, 4 and 7 and the like, the distance from the penetrating points to the rear end of the back or base ends of the spaced blades slightly exceeds the distance from the rear end of the device to the end of the straight line portions of the slots cut thereby or where the side blades merge into the curved portions of the front cutting blade, whereby the pointed end portions of the side blades contact with the curved portions or the front ends of the straight line portions of the slots cut in the box to limit the outward rocking movement of the device when the rear edges of the cutting blades are substantially flush with the inside walls of the box to provide a freely flowing opening.

The term, "base portion of the device," as used in the specification and claims, is intended to mean the upper portions of the cutting members remote from their penetrating ends and which portions connect the cutting members together as disclosed in Fig. 7, and may include the back members 8, 27, 43 and 53 connecting said upper portions, as disclosed respectively in Figs. 1 to 6, inclusive.

The terms "front end" or "forward end" of the device used interchangeably in the specification and claims designates the part or end "of the base" or "base portion" of the device having the transverse cutting blade or cutting member.

The invention in this application involves an improvement and continuation in parts of the Lid, opener and pouring spout device disclosed and claimed in my co-pending application, Serial No. 293,249, filed August 24, 1939, which on November 9, 1943, matured into Patent No. 2,333,781. The invention disclosed in this application differs primarily from that disclosed in my pending application in that the front cutting blade is rigid or integral with the back member or the upper base portions or side cutting blades and, instead of the front end of the device being locked or clamped to the free end of the tab by rocking the front cutting blade or the like, the device is auto-

matically locked to the tab as it is being cut and is substantially anchored thereto upon cutting the tab and slots.

I claim:

1. In a lid opener and pouring spout device for use on containers comprising a base member having a rigid front end means for cutting a transverse slot and spaced side cutting members with front and rear cutting edges, said spaced side cutting members having penetrating ends and straight base portons whereby the device will cut a tab and spaced slots having straight line portions for the device to engage in when it is pressed against the wall of a container, means on the base portion of the device for releasably locking it to said tab when being cut for rocking on the container, said penetrating ends being spaced from the rear end of said back member a distance greater than the length of the straight line portions of said spaced slots whereby the outward rocking movement of the device on the tab will be limited by said penetrating ends engaging the front ends of said straight line portions of the spaced slots.

2. In a combination opener and pouring spout device for use on containers comprising spaced side members, a front end member and a rigid integral base rigidly joining said members together to provide a pouring spout device, said side and end members having cutting edges thereon whereby said pouring spout device will cut a tab and form fitting opening for said pouring spout to frictionally engage the sides of said opening when pressed against the wall of a container, and tab locking means on said base for contiguously engaging the tab to lock the pouring spout to said tab upon said pressing against operation whereby the tab will anchor and hinge said pouring spout device on the wall of the container for rocking thereon to open and close said opening.

3. In a combination opener and pouring spout device for use on containers comprising spaced side members, a front end member and a base rigidly joining said members together to provide a rigid integral pouring spout device, said members having cutting edges thereon whereby said device will cut a tab and form fitting opening for the pouring spout to frictionally engage the sides of said opening when pressed against the wall of a container, and tab locking elements extending inwardly from said base for contiguously engaging the tab for locking the pouring spout to said tab upon said pressing against operation whereby the tab will anchor and hinge said pouring spout device on the wall of a container for rocking thereon to open and close said opening.

4. In a combination opener and pouring spout device comprising spaced side members, a front end member and a base rigidly joining said members together to provide a rigid integral pouring spout device, said side and end members having cutting edges thereon whereby said device will cut a tab and form fitting opening for said spout to frictionally engage in when pressed against the side of a container, tab locking means on said base for contiguously engaging the tab for locking the base to said tab upon said pressing against operation whereby a tab anchoring hinge is provided for rocking said pouring spout device on the side of the container, the cutting edge on the front end of the spout being arched shape and said base having laterally extending stop flanges.

5. In a combination opener and pouring spout device comprising spaced side members, a front end member and a base rigidly joining said members together to provide a rigid integral pouring spout device, said members having cutting edges thereon whereby said device will cut a tab and a form fitting opening for said pouring spout to frictionally engage in when pressed against the side of a container, said cutting edges being spaced apart more than the inside space at the base portion of the device whereby an oversized tab is cut upon said pressing against operation, said oversized tab being wedged in on the inside of said base portion as the tab is being cut to contiguously engage the tab for locking the tab to the spout to provide a tab anchoring hinge for the spout device to rock on the side of the container, and an outwardly extending finger lever on said base for rocking the pouring spout on said tab hinge.

6. In a combination opener and pouring spout device comprising spaced side members, a front end member and a base joining said members together to provide a rigid integral pouring spout device, said side and end members having cutting edges thereon whereby said device will cut a tab and a form fitting opening for said spout to frictionally engage in when pressed against the side of a container, tab binding means on said base for releasably locking the base to said tab whereby a tab anchoring hinge is provided for rocking said pouring spout device on the wall of a container, and a tab butting means on the front end of said pouring spout for conforming the free end of said tab to the cutting edge on said front end member to provide a freely flowing spout opening.

7. In a combination opener and pouring spout device comprising spaced side members, a front end member and a base joining said members together to provide a pouring spout device, said end and side members having cutting edges thereon whereby said device will cut a tab and a form fitting opening for said spout to frictionally engage in when pressed against the side of a container, tab binding means on said base for releasably locking the pouring spout to said tab whereby a tab anchoring hinge is provided for rocking said pouring spout device to the side of a container, and a tab butting means on the front end of said pouring spout device comprising an arcuate shaped member for conforming the free end of the tab to the front end of the device to provide a freely flowing pouring spout opening.

DORNE N. HALSTEAD.

REFERENCES CITED

The following references are of record in the file of this patent:

UNITED STATES PATENTS

Number	Name	Date
1,101,337	Schindler	June 23, 1914
1,289,587	Willcox	Dec. 31, 1918
1,520,006	Brucker	Dec. 23, 1924
1,561,601	Cannon	Nov. 17, 1925
1,578,419	Cannon	Mar. 30, 1926
1,619,315	Ricketts	Mar. 1, 1927
1,951,515	Lyell	Mar. 20, 1934
2,069,738	Buchen	Feb. 9, 1937
2,282,150	Andary	May 5, 1942
2,311,255	Read	Feb. 16, 1943
2,318,899	Stilwell	May 11, 1943
2,333,781	Halstead	Nov. 9, 1943