OPIC
Office de la propriété intellectuelle du Canada

CIPO
Canadian Intellectual Property Office

(12) (19) (CA) **Brevet-Patent**

(11) (21) (C) **2,101,156**
(86) 1992/02/11
(87) 1992/08/29
(45) 2000/05/02

(72) Kelley, Paul E., US
(73) SHIMADZU CORPORATION, JP

(51) Int.Cl.[6] H01J 49/42
(30) 1991/02/28 (662,427) US

(54) **METHODE DE SPECTROMETRIE DE MASSE PAR IONISATION CHIMIQUE UTILISANT UN FILTRE D'ABSORPTION**

(54) **CHEMICAL IONIZATION MASS SPECTROMETRY METHOD USING NOTCH FILTER**

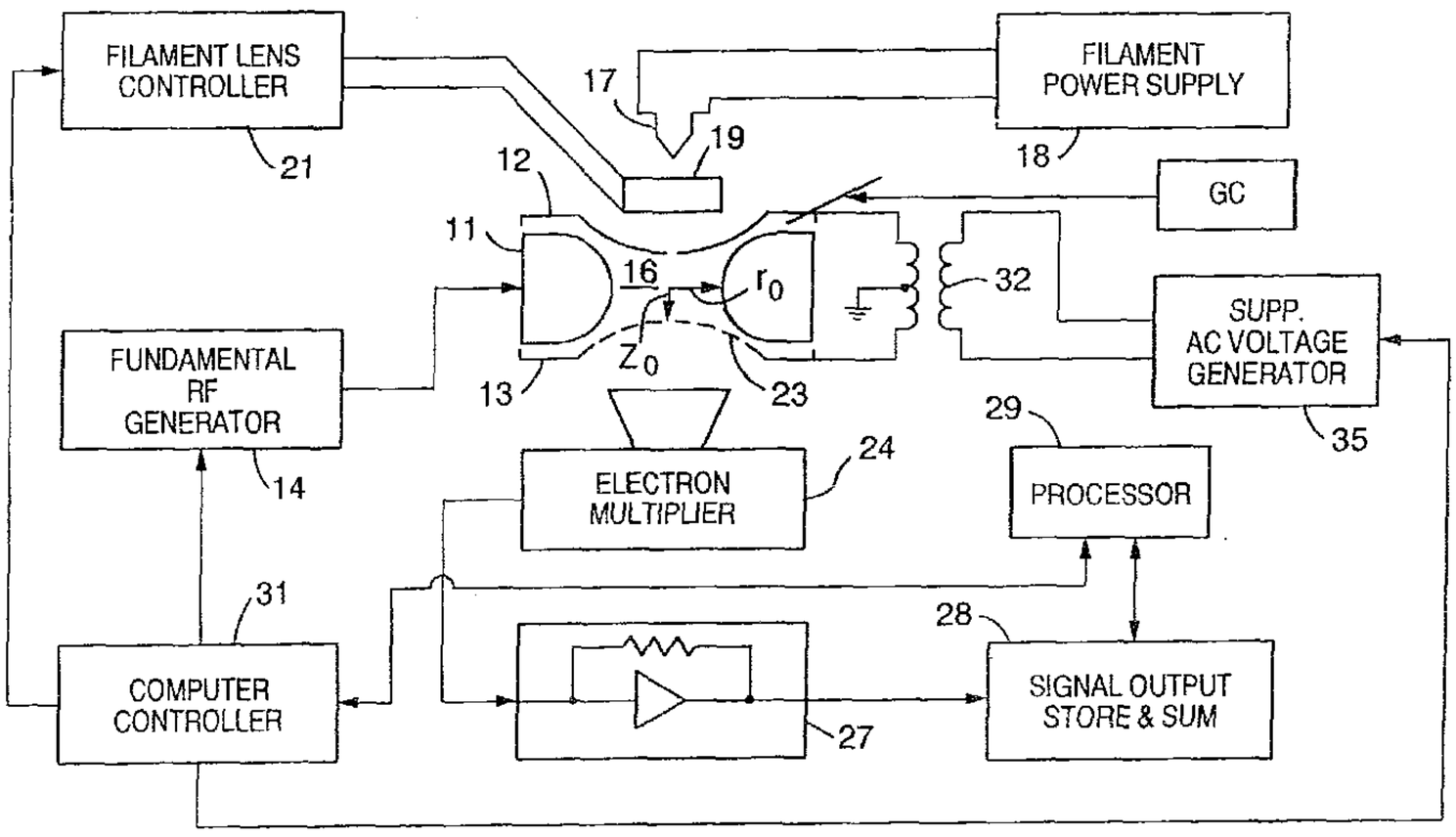

(57) Procédé de spectrométrie de masse dans lequel on applique un son filtré au moyen d'un filtre coupe-bande à un piège à ions pour évacuer par résonnance tous les ions de la région (16) du piège, à l'exception d'ions réactifs sélectionnés. De préférence, le piège à ions est un quadripôle défini par une électrode annulaire (11) et une paire d'électrodes d'extrémité (12, 13) placées symétriquement le long d'un axe z et on applique le son filtré à l'électrode annulaire (11) {plutôt qu'aux électrodes d'extrémités (12, 13)}, afin d'éjecter les ions indésirables dans des directions radiales {vers l'électrode annulaire (11)} plutôt que vers un détecteur (24) monté le long de l'axe z. L'application d'un son filtré au piège, effectuée de la façon décrite, peut augmenter considérablement la durée de vie dudit détecteur d'ions.

(57) A mass spectrometry method in which notch-filtered noise is applied to an ion trap to resonate all ions except selected reagent ions out of the region (16) of the trapping field. Preferably, the trapping field is a quadrupole trapping field defined by a ring electrode (11) and a pair of end electrodes (12, 13) positioned symetrically along a z-axis, and the filtered noise is applied to the ring electrode (11) {rather than to the end electrodes (12, 13)} to eject unwanted ions in radial directions {toward the ring electrode (11)} rather than toward a detector (24) mounted along the z-axis. Application of the filtered noise to the trap in this manner can significantly increase the operating lifetime of such an ion detector.

PCT WORLD INTELLECTUAL PROPERTY ORGANIZATION
International Bureau

INTERNATIONAL APPLICATION PUBLISHED UNDER THE PATENT COOPERATION TREATY (PCT)

(51) International Patent Classification 5 : H01J 49/42 — A1

(11) International Publication Number: WO 92/16010

(43) International Publication Date: 17 September 1992 (17.09.92)

2101156

(21) International Application Number: PCT/US92/01110

(22) International Filing Date: 11 February 1992 (11.02.92)

(30) Priority data:
662,427 — 28 February 1991 (28.02.91) — US

(71) Applicant: TELEDYNE MEC [US/US]; 1?74 Terra Bella Avenue, Mountain View, CA 94039-7244 (US).

(72) Inventor: KELLEY, Paul, E. ; 3034 Sunny Meadow Lane, San Jose, CA 95135 (US).

(74) Agents: EQUITZ, Alfred, A. et al.; Limbach & Limbach, 2001 Ferry Building, San Francisco, CA 94111 (US).

(81) Designated States: AT (European patent), BE (European patent), CA, CH (European patent), DE (European patent), DK (European patent), ES (European patent), FR (European patent), GB (European patent), GR (European patent), IT (European patent), JP, LU (European patent), MC (European patent), NL (European patent), SE (European patent).

Published
With international search report.
With amended claims.

(54) Title: CHEMICAL IONIZATION MASS SPECTROMETRY METHOD USING NOTCH FILTER

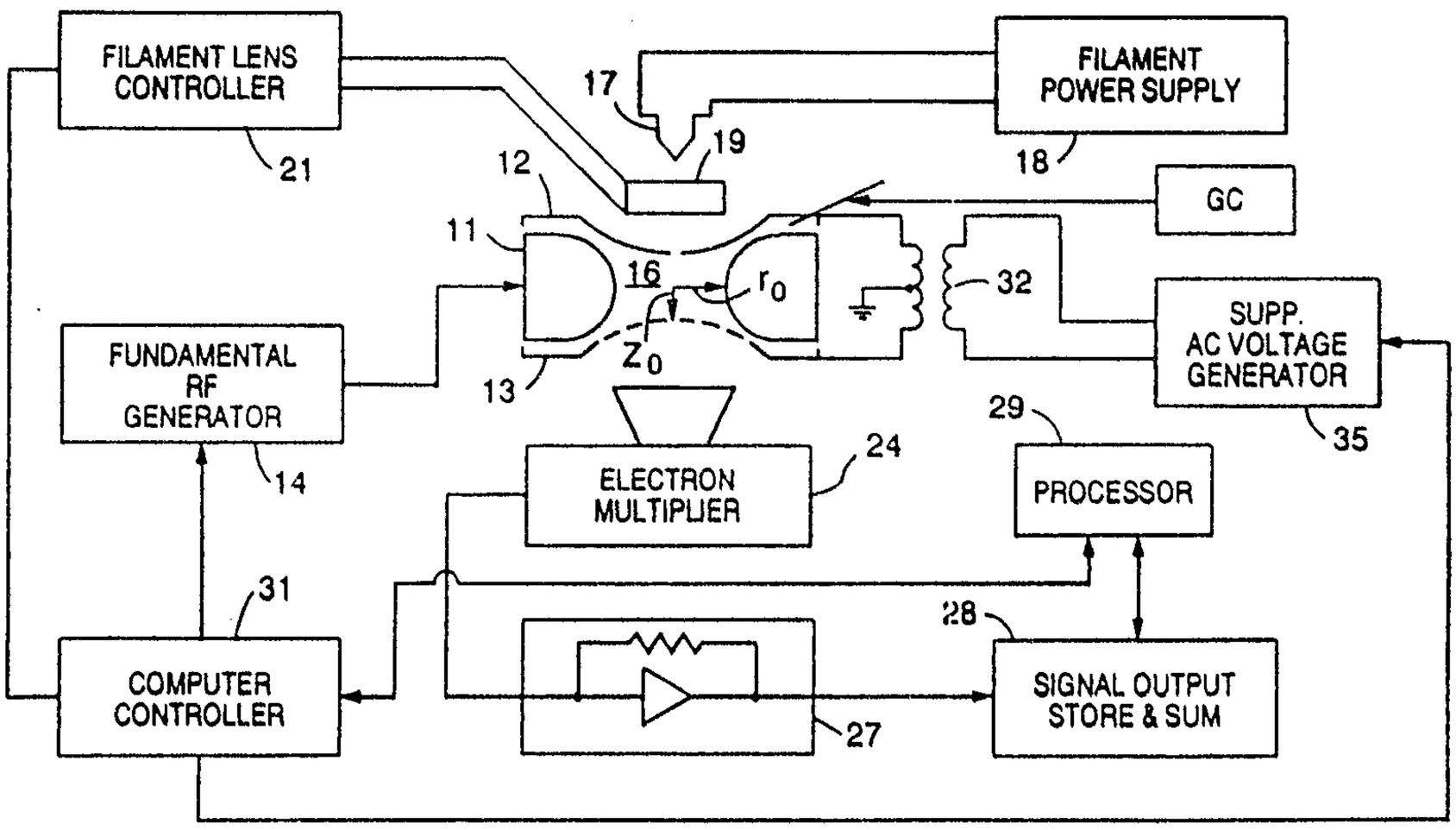

(57) Abstract

A mass spectrometry method in which notch-filtered noise is applied to an ion trap to resonate all ions except selected reagent ions out of the region (16) of the trapping field. Preferably, the trapping field is a quadrupole trapping field defined by a ring electrode (11) and a pair of end electrodes (12, 13) positioned symmetrically along a z-axis, and the filtered noise is applied to the ring electrode (11) {rather than to the end electrodes (12, 13)} to eject unwanted ions in radial directions {toward the ring electrode (11)} rather than toward a detector (24) mounted along the z-axis. Application of the filtered noise to the trap in this manner can significantly increase the operating lifetime of such an ion detector.

CHEMICAL IONIZATION MASS SPECTROMETRY METHOD USING NOTCH FILTER

Field of the Invention

The invention relates to mass spectrometry methods in which reagent ions are stored in an ion trap. More particularly, the invention is a mass spectrometry method in which notch filtered noise is applied to an ion trap to eject ions other than selected reagent and precursor ions from the trap.

Background of the Invention

In a class of conventional mass spectrometry techniques known as "MS/MS" methods, ions (known as "parent ions") having mass-to-charge ratio within a selected range are stored in an ion trap. The trapped parent ions are then allowed, or induced, to dissociate (for example, by colliding with background gas molecules within the trap) to produce ions known as "daughter ions." The daughter ions are then ejected from the trap and detected.

For example, U.S. Patent 4,736,101, issued April 5, 1988, to Syka, et al., discloses an MS/MS method in which ions (having a mass-to-charge ratio within a predetermined range) are trapped within a three-dimensional quadrupole trapping field. The trapping field is then scanned to eject unwanted parent ions (ions other than parent ions having a desired mass-to-charge ratio) sequentially from the trap. The trapping field is then changed again to become capable of storing daughter ions of interest. The trapped parent ions are then induced to dissociate to produce daughter ions, and the daughter ions are ejected sequentially from the trap for detection.

In order to eject unwanted parent ions from the trap prior to parent ion dissociation, U.S. 4,736,101

teaches that the trapping field should be scanned by sweeping the amplitude of the fundamental voltage which defines the trapping field.

U.S. 4,736,101 also teaches that a supplemental AC field can be applied to the trap during the period in which the parent ions undergo dissociation, in order to promote the dissociation process (see column 5, lines 43-62), or to eject a particular ion from the trap so that the ejected ion will not be detected during subsequent ejection and detection of sample ions (see column 4, line 60, through column 5, line 6).

U.S. 4,736,101 also suggests (at column 5, lines 7-12) that a supplemental AC field could be applied to the trap during an initial ionization period, to eject a particular ion (especially an ion that would otherwise be present in large quantities) that would otherwise interfere with the study of other (less common) ions of interest.

U.S. Patent 4,686,367, issued August 11, 1987, to Louris, et al., discloses another conventional mass spectrometry technique, known as a chemical ionization or "CI" method, in which stored reagent ions are allowed to react with analyte molecules in a quadrupole ion trap. The trapping field is then scanned to eject product ions which result from the reaction, and the ejected product ions are detected.

European Patent Application 362,432 (published April 11, 1990) discloses (for example, at column 3, line 56 through column 4, line 3) that a broad frequency band signal ("broadband signal") can be applied to the end electrodes of a quadrupole ion trap to simultaneously resonate all unwanted ions out of the trap (through the end electrodes) during a sample ion storage step. EPA 362,432 teaches that the

broadband signal can be applied to eliminate unwanted primary ions as a preliminary step to a chemical ionization operation, and that the amplitude of the broadband signal should be in the range from about 0.1 volts to 100 volts.

Summary of the Invention

The invention is a mass spectrometry method in which a broadband signal (noise having a broad frequency spectrum) is applied through a notch filter to an ion trap to resonate all ions except selected reagent and precursor ions out of the trap. Such a notch-filtered broadband signal will be denoted herein as a "filtered noise" signal.

Preferably, the trapping field is a quadrupole trapping field defined by a ring electrode and a pair of end electrodes positioned symmetrically along a z-axis, and the filtered noise is applied to the ring electrode (rather than to the end electrodes) to eject unwanted ions in a radial direction (toward the ring electrode) rather than in the z-direction toward a detector mounted along the z-axis. Application of the filtered noise to the trap in this manner can significantly increase the operating lifetime of such an ion detector.

Also preferably, the trapping field has a DC component selected so that the trapping field has both a high frequency and low frequency cutoff, and is incapable of trapping ions with resonant frequency below the low frequency cutoff or above the high frequency cutoff. Application of the inventive filtered noise signal to such a trapping field is functionally equivalent to filtration of the trapped ions through a notched bandpass filter having such high and low frequency cutoffs.

Application of filtered noise in accordance with the invention has several significant advantages over the conventional techniques it replaces. In all embodiments of the inventive method, a notched broadband signal is applied to rapidly resonate all ions out of a trap, except for reagent and precursor ions having a mass-to-charge ratio within a selected range (occupying a narrow "window" determined by the notch in the notch filter). In prior art techniques in which the trapping field is scanned to eject ions other than those having a selected mass-to-charge ratio, the scanning operation requires much more time than does filtered noise application in accordance with the invention. During the lengthy duration of such a prior art field scan, contaminating ions will unavoidably be produced in the trap, and yet many of these contaminating ions will not experience field conditions adequate to eject them from the trap. The inventive filtered noise application operation avoids accumulation of such contaminating ions.

The invention also enables ejection of unwanted ions in directions away from an ion detector to enhance the detector's operating life, and enables rapid ejection of unwanted ions having mass-to-charge ratio below a minimum value, above a maximum value, and outside a window (between the minimum and maximum values) determined by the notched broadband signal.

In one embodiment, after the filtered noise is applied to the trap (to eject unwanted ions from the trap) and selected reagent ions have been stored in the trap, the stored

reagent ions are permitted to react with sample molecules in the trap. The product ions resulting from this reaction are stored in the trap, and are later detected by an in-trap or out-of-trap detector.

The invention may be summarized according to a broad aspect as a mass spectrometry method, including the steps of: (a) establishing a trapping field capable of storing reagent ions and product ions having mass-to-charge ratio within a selected range within a trap region bounded by a set of electrodes; (b) applying a notched broadband signal to at least one of the electrodes to resonate out of the trap region unwanted ions having mass-to-charge ratio within a second selected range, wherein the selected range corresponds to a trapping range of ion resonance frequencies, wherein the notched broadband signal has frequency components within a lower frequency range from a first frequency up to a notch frequency band, and within a higher frequency range from the notch frequency band up to second frequency, and wherein the frequency range spanned by the first frequency and the second frequency includes said trapping range.

According to another aspect the invention provides a mass spectrometry method, including the steps of: (a) establishing a trapping field capable of storing reagent ions and product ions having mass-to charge ratio within a selected range within a trap region bounded by a set of electrodes; (b) applying a notched broadband signal to at least one of the electrodes to resonate out of the trap region unwanted ions having mass-to-charge ratio within a second selected range,

wherein the trapping field is a three-dimensional quadrupole trapping field, wherein the electrodes include a ring electrode and a pair of end electrodes, wherein step (a) includes the step of applying a fundamental voltage signal to the ring electrode to establish the trapping field, and wherein step (b) includes the step of: applying the notched broadband signal to the ring electrode to resonate the unwanted ions out of the trap region in radial directions toward the ring electrode.

According to yet another aspect the invention provides a mass spectrometry method, including the steps of: (a) establishing a three-dimensional quadrupole trapping field capable of storing ions within a trap region bounded by a ring electrode and a pair of end electrodes, wherein the ions have resonance frequencies within a selected range; (b) introducing reagent ions having resonance frequencies within a notch frequency band into the trap region, and applying a notched broadband signal to at least one of the electrodes to resonate out of the trap region unwanted ions having resonance frequencies within a lower frequency range from a first frequency up to the notch frequency band, and within a higher frequency range from the notch frequency band up to second frequency, wherein the notch frequency band is within the selected range; (c) introducing sample molecules into the trap region; (d) allowing the sample molecules to react with the reagent ions to produce product ions having at least one resonance frequency within the selected range; and (e) after step (d), detecting the product ions.

Brief Description of the Drawings

Figure 1 is a simplified schematic diagram of an apparatus useful for implementing a class of preferred embodiments of the invention.

Figure 2 is a diagram representing signals generated during performance of a first preferred embodiment of the invention.

Figure 3 is a graph representing a preferred embodiment of the notch-filtered broadband signal applied during performance of the invention.

Figure 4 is a diagram representing signals generated during performance of a second preferred embodiment of the invention.

Detailed Description of the Preferred Embodiments

The quadrupole ion trap apparatus shown in Figure 1 is useful for implementing a class of preferred embodiments of the invention. The Figure 1 apparatus includes ring electrode 11 and end electrodes 12 and 13. A three-dimensional quadrupole trapping field is produced in region 16 enclosed by electrodes 11-13, when fundamental voltage generator 14 is switched on to apply a fundamental RF voltage (having a radio frequency component and optionally also a DC component) between electrode 11 and electrodes 12 and 13. Ion storage region 16 has dimension z_o in the z-direction (the vertical direction in Figure 1) and radius r_o (in a radial direction from the z-axis through the center of ring electrode 11 to the inner surface of ring electrode 11). Electrodes 11, 12, and 13 are common mode grounded through coupling transformer 32.

Supplemental AC voltage generator 35 can be switched on to apply a desired supplemental AC

voltage signal (such as the inventive filtered noise signal) across end electrodes 12 and 13. The supplemental AC voltage signal is selected (in a manner to be explained below in detail) to resonate desired trapped ions at their axial resonance frequencies. Alternatively, supplemental AC voltage generator 35 (or a second AC voltage generator, not shown in Figure 1) can be connected, between ring electrode 11 and ground, to apply a desired notch-filtered noise signal to ring electrode 11 to resonate unwanted ions (at their radial resonance frequencies) out of the trap in radial directions.

Filament 17, when powered by filament power supply 18, directs an ionizing electron beam into region 16 through an aperture in end electrode 12. The electron beam ionizes sample molecules within region 16, so that the resulting ions can be trapped within region 16 by the quadrupole trapping field. Cylindrical gate electrode and lens 19 is controlled by filament lens control circuit 21 to gate the electron beam off and on as desired.

In one embodiment, end electrode 13 has perforations 23 through which ions can be ejected from region 16 (in the z-direction) for detection by an externally positioned electron multiplier detector 24. Electrometer 27 receives the current signal asserted at the output of detector 24, and converts it to a voltage signal, which is summed and stored within circuit 28, for processing within processor 29.

In a variation on the Figure 1 apparatus, perforations 23 are omitted, and an in-trap detector is substituted. Such an in-trap detector can comprise the trap's end electrodes themselves. For example, one or both of the end electrodes could be composed

of (or partially composed of) phosphorescent material which emits photons in response to incidence of ions at one of its surfaces. In another class of embodiments, the in-trap ion detector is distinct from the end electrodes, but is mounted integrally with one or both of them (so as to detect ions that strike the end electrodes without introducing significant distortions in the shape of the end electrode surfaces which face region 16). One example of this type of in-trap ion detector is a Faraday effect detector in which an electrically isolated conductive pin is mounted with its tip flush with an end electrode surface (preferably at a location along the z-axis in the center of end electrode 13). Alternatively, other kinds of in-trap ion detection means can be employed, such as an ion detection means capable of detecting resonantly excited ions that do not directly strike it (examples of this latter type of detection means include resonant power absorption detection means, and image current detection means). The output of each in-trap detector is supplied through appropriate detector electronics to processor 29.

Control circuit 31 generates control signals for controlling fundamental voltage generator 14, filament control circuit 21, and supplemental AC voltage generator 35. Circuit 31 sends control signals to circuits 14, 21, and 35 in response to commands it receives from processor 29, and sends data to processor 29 in response to requests from processor 29.

A first preferred embodiment of the inventive method will next be described with reference to Figure 2. As indicated in Figure 2, the first step of this method (which occurs during period "A") is to

store reagent ions in a trap. This can be accomplished by applying a fundamental voltage signal to the trap (by activating generator 14 of the Figure 1 apparatus) to establish a quadrupole trapping field, and introducing an ionizing electron beam into ion storage region 16. Alternatively, the reagent ions can be externally produced and then injected into storage region 16.

The fundamental voltage signal is chosen so that the trapping field will store (within region 16) reagent ions (such as reagent ions resulting from interactions between reagent molecules and precursor reagent ions, which are produced by the ionizing electron beam) as well as product ions (which may be produced during period "B") having mass-to-charge ratio (and hence resonance frequency) within a desired range. The fundamental voltage signal has an RF component, and preferably also has a DC component whose amplitude is chosen to cause the trapping field to have both a high frequency cutoff and a low frequency cutoff for the ions it is capable of storing. Such low frequency cutoff and high frequency cutoff correspond, respectively (and in a well-known manner), to a particular maximum and minimum ion mass-to-charge ratio.

Also during step A, a notch-filtered broadband noise signal (the "filtered noise" signal in Figure 2) is applied to the trap. Figure 3 represents the frequency-amplitude spectrum of a preferred embodiment of such filtered noise signal, for use in the case that the RF component of the fundamental voltage signal applied to ring electrode 11 has a frequency of 1.0 MHz, and the case that the fundamental voltage signal has a non-optimal DC component (for example, no DC component at all). The

phrase "optimal DC component" will be explained below. As indicated in Figure 3, the bandwidth of the filtered noise signal extends from about 10 kHz to about 500 kHz (with components of increasing frequency corresponding to ions of decreasing mass-to-charge ratio). There is a notch (having width approximately equal to 1 kHz) in the filtered noise signal at a frequency (between 10 kHz and 500 kHz) corresponding to the axial resonance frequency of a particular reagent and precursor ion to be stored in the trap.

Alternatively, the inventive filtered noise signal can have a notch corresponding to the radial resonance frequency of a reagent and precursor ion to be stored in the trap (this is useful in a class of embodiments to be discussed below in which the filtered noise signal is applied to the ring electrode of a quadrupole ion trap rather than to the end electrodes of such a trap), or it can have two or more notches, each corresponding to the resonance frequency (axial or radial) of a different reagent ion to be stored in the trap.

In the case that the fundamental voltage signal has an optimal DC component (i.e., a DC component chosen to establish both a desired low frequency cutoff and a desired high frequency cutoff for the trapping field), a filtered noise signal with a narrower frequency bandwidth than that shown in Figure 3 can be employed during performance of the invention. Such a narrower bandwidth filtered noise signal is adequate (assuming an optimal DC component is applied) since ions having mass-to-charge ratio above the maximum mass-to-charge ratio which corresponds to the low frequency cutoff will not have stable trajectories within the trap region, and thus

will escape the trap during period "A" even without application of any filtered noise signal. A filtered noise signal having a minimum frequency component substantially above 10 kHz (for example, 100 kHz) will typically be adequate to resonate unwanted reagent ions from the trap, if the fundamental voltage signal has an optimal DC component.

Ions produced in (or injected into) trap region 16 during period A which have a mass-to-charge ratio outside the desired range (determined by the combination of the filtered noise signal and the fundamental voltage signal) will escape from region 16, possibly saturating detector 24 as they escape, as indicated by the value of the "ion signal" in Figure 2 during period A.

Before the end of period A, and preferably before the filtered noise signal is switched off, the ionizing electron beam is gated off.

During period A or B (indicated in Figure 2), sample molecules are introduced within trap region 16. Even if the sample molecules are introduced during period A, many of them will not become ionized, and so will not be ejected from the trap region.

After period A, during period B, the sample molecules are permitted to react with the stored reagent ions. Product ions resulting from this reaction are stored in the trap region (if their mass-to-charge ratios are within the range capable of being stored by the trapping field established during period A).

Next, during period C, the product ions are sequentially detected. This can be accomplished, as suggested by Figure 2, by scanning the amplitude of the RF component of the fundamental voltage signal

(or both the amplitude of the RF and the DC components of the fundamental voltage signal) to successively eject product ions having different mass-to-charge ratios from the trap for detection outside the trap (for example, by electron multiplier 24 shown in Figure 1). The "ion signal" portion shown within period C of Figure 2 has three peaks, each representing sequentially detected product ions having a different mass-to-charge ratio.

If out-of-trap product ion detection is employed during period C, the product ions are preferably ejected from the trap in the z-direction toward a detector (such as electron multiplier 24) positioned along the z-axis. This can be accomplished using a sum resonance technique, a mass selective instability ejection technique, a resonance ejection technique in which a combined trapping field and supplementary AC field is swept or scanned to eject product ions successively from the trap in the z-direction), or by some other ion ejection technique.

If in-trap detection is employed during period C, the product ions are preferably detected by an in-trap detector positioned at the location of one or both of the trap's end electrodes (and preferably centered about the z-axis). Examples of such in-trap detectors have been discussed above.

To enhance the operating lifetime of an in-trap or out-of-trap detector positioned along the z-axis (or at the end electrodes), the unwanted ions resonated out of the trap during period A (by the filtered noise signal) should be ejected in radial directions (toward the ring electrode; not the end electrodes) so that they do not strike the detector during step A. As indicated above with reference to Figure 1, this can be accomplished by applying the

filtered noise signal to the ring electrode of a quadrupole ion trap to resonate unwanted ions (at their radial resonance frequencies) out of the trap in radial directions (away from the detector).

During the period which immediately follows period C, all voltage signal sources (and the ionizing electron beam) are switched off. The inventive method can then be repeated (i.e., during period D in Figure 2).

Another preferred embodiment of the invention will next be described with reference to Figure 4. The steps of the Figure 4 method performed during periods A and B are identical to those performed during periods A and B of Figure 2, with the following qualification. During period A of Figure 4, the trapping field is preferably established so as to be capable (i.e., the RF and DC components of the fundamental voltage signal are chosen so that the trapping field is capable) of storing desired daughter ions of the desired ones of the product ions produced during step B (as well as the reagent and product ions to be stored during periods A and B).

If the trapping field is not established so as to be capable of storing such daughter ions during period A, then during period C it is changed so as to become capable of storing the daughter ions (as indicated by the change in the fundamental voltage signal shown between periods B and C of Figure 4). Also during period C, a second filtered noise signal is applied to the trap to resonate out of the trap unwanted ions having mass-to-charge ratio other than that of desired product ions produced during period B.

After period C, during period D, a supplemental AC voltage signal is applied to the trap (such as by

activating generator 35 of the Figure 1 apparatus or a second supplemental AC voltage generator connected to the appropriate electrode or electrodes). The power (output voltage applied) of the supplemental AC signal is lower than that of the filtered noise signal (typically, the power of the supplemental AC signal is on the order of 100 mV while the power of the filtered noise signal is on the order of 10 V). The supplemental AC voltage signal has a frequency selected to induce dissociation of a particular stored product ion (to produce daughter ions therefrom), but has amplitude (and hence power) sufficiently low that it does not resonate significant numbers of the ions excited thereby to a degree sufficient for in-trap or out-of-trap detection.

Next, during period E, the daughter ions are sequentially detected. This can be accomplished, as suggested by Figure 4, by scanning the amplitude of the RF component of the fundamental voltage signal (or both the amplitude of the RF and the DC components of the fundamental voltage signal) to successively eject daughter ions having different mass-to-charge ratios from the trap for detection outside the trap (for example, by electron multiplier 24 shown in Figure 1). The "ion signal" portion shown within period C of Figure 2 has four peaks, each representing sequentially detected daughter ions having a different mass-to-charge ratio.

If out-of-trap daughter ion detection is employed during period E, the daughter ions are preferably ejected from the trap in the z-direction toward a detector (such as electron multiplier 24) positioned along the z-axis. This can be accomplished using a sum resonance technique, a mass selective

instability ejection technique, a resonance ejection technique in which a combined trapping field and supplementary AC field is swept or scanned to eject daughter ions successively from the trap in the z-direction), or by some other ion ejection technique.

If in-trap detection is employed during period E, the daughter ions are preferably detected by an in-trap detector positioned at the location of one or both of the trap's end electrodes (and preferably centered about the z-axis). Examples of such in-trap detectors have been discussed above.

One class of embodiments of the invention includes variations on the Figure 4 method in which additional generations of daughter ions (such as granddaughter ions of the parent ions mentioned above) are isolated in a trap and then detected. For example, after the initial application of a supplemental AC voltage signal during step D in the Figure 4 method, another filtered noise signal can be applied to the trap to eject all ions other than selected daughter ions (i.e., daughter ions having mass-to-charge ratios within a desired range). The daughter ions so isolated in the trap are then allowed to dissociate (or induced to dissociate) to produce granddaughter ions, and the granddaughter ions are then sequentially detected during step E.

For example, during step D in the Figure 4 method, the supplemental AC voltage signal can consist of an earlier portion followed by a later portion: the earlier portion having frequency selected to induce production of a daughter ion (by dissociating a parent ion); and the later portion having frequency selected to induce production of a granddaughter ion (by dissociating the daughter ion). Between application of such earlier and later

portions, a filtered noise signal can be applied to resonate ions other than the daughter ion out of the trap.

In the claims, the phrase "daughter ion" is intended to denote granddaughter ions (second generation daughter ions) and subsequent (third or later) generation daughter ions, as well as "first generation" daughter ions.

Various other modifications and variations of the described method of the invention will be apparent to those skilled in the art without departing from the scope and spirit of the invention. Although the invention has been described in connection with specific preferred embodiments, it should be understood that the invention as claimed should not be unduly limited to such specific embodiments.

THE EMBODIMENTS OF THE INVENTION IN WHICH AN EXCLUSIVE PROPERTY OR PRIVILEGE IS CLAIMED ARE DEFINED AS FOLLOWS:

1. A mass spectrometry method, including the steps of:

(a) establishing a trapping field capable of storing reagent ions and product ions having mass-to-charge ratio within a selected range within a trap region bounded by a set of electrodes;

(b) applying a notched broadband signal to at least one of the electrodes to resonate out of the trap region unwanted ions having mass-to-charge ratio within a second selected range, wherein the selected range corresponds to a trapping range of ion resonance frequencies, wherein the notched broadband signal has frequency components within a lower frequency range from a first frequency up to a notch frequency band, and within a higher frequency range from the notch frequency band up to second frequency, and wherein the frequency range spanned by the first frequency and the second frequency includes said trapping range.

2. The method of claim 1, wherein the first frequency is substantially equal to 10 kHz, the second frequency is substantially equal to 500 kHz, and the notch frquency band has width substantially equal to 1 kHz.

3. The method of claim 2, wherein the frequency components of the notched broadband signal have amplitude on the order of 10 volts.

4. The method of claim 1, wherein the trapping field is a three-dimensional quadrupole trapping field, and wherein step (a) includes the step of:

applying a fundamental voltage signal to at least one of the electrodes, wherein the fundamental voltage signal has a radio frequency component and a DC component having an amplitude, and wherein the amplitude of the DC component is chosen to establish both a desired low frequency cutoff and desired high frequency cutoff for the trapping field.

5. A mass spectrometry method, including the steps of:

(a) establishing a trapping field capable of storing reagent ions and product ions having mass-to charge ratio within a selected range within a trap region bounded by a set of electrodes;

(b) applying a notched broadband signal to at least one of the electrodes to resonate out of the trap region unwanted ions having mass-to-charge ratio within a second selected range, wherein the trapping field is a three-dimensional quadrupole trapping field, wherein the electrodes include a ring electrode and a pair of end electrodes, wherein step (a) includes the step of applying a fundamental voltage signal to the ring electrode to establish the trapping field, and wherein step (b) includes the step of:

applying the notched broadband signal to the ring electrode to resonate the unwanted ions out of the trap region in radial directions toward the ring electrode.

6. The method of claim 5, wherein reagent ions are trapped within the trap region after step (b), and also including the steps of:

(c) introducing sample molecules into the trap region;

(d) after steps (b) and (c), allowing the sample molecules and the trapped reagent ions to react to produce product ions having mass-to-charge ratio within the selected range; and

(e) after step (d), detecting the product ions using a detector positioned away from the ring electrode.

7. The method of claim 6, wherein the detector comprises, or is integrally mounted with, one of the end electrodes.

8. The method of claim 6, wherein the ring electrode has a central longitudinal z-axis, and the end electrodes and the detector are positioned along the z-axis.

9. A mass spectrometry method, including the steps of:

(a) establishing a trapping field capable of storing reagent ions and product ions having mass-to-charge ratio within a selected range within a trap region bounded by a set of electrodes;

(b) applying a notched broadband signal to at least one of the electrodes to resonate out of the trap region unwanted ions having mass-to-charge ratio within a second selected range, wherein the trapping field is a three-dimensional

B

quadrupole trapping field, wherein the electrodes include a ring electrode and a pair of end electrodes, wherein step (a) includes the step of applying a fundamental voltage signal to the ring electrode to establish the trapping field, and wherein step (b) includes the step of:

applying the notched broadband signal to the ring electrode to resonate the unwanted ions out of the trap region in radial directions toward the ring electrode, and wherein the selected range corresponds to a trapping range of ion frequencies, wherein the notched broadband signal has frequency components within a lower frequency range from a first frequency up to notch frequency band, and within a higher frequency range from the notch frequency band up to second frequency, wherein the frequency range spanned by the first frequency and the second frequency includes said trapping range, wherein the fundamental voltage signal has a radio frequency component and a DC component having an amplitude, and wherein the amplitude of the DC component is chosen to establish both a desired low frequency cutoff and desired high frequency cutoff for the trapping field.

10. A mass spectrometry method, including the steps of:

(a) establishing a three-dimensional quadrupole trapping field capable of storing ions within a trap region bounded by a ring electrode and a pair of end electrodes, wherein the ions have resonance frequencies within a selected range;

(b) introducing reagent ions having resonance frequencies within a notch frequency band into the trap region, and

applying a notched broadband signal to at least one of the electrodes to resonate out of the trap region unwanted ions having resonance frequencies within a lower frequency range from a first frequency up to the notch frequency band, and within a higher frequency range from the notch frequency band up to second frequency, wherein the notch frequency band is within the selected range;

(c) introducing sample molecules into the trap region;

(d) allowing the sample molecules to react with the reagent ions to produce product ions having at least one resonance frequency within the selected range; and

(e) after step (d), detecting the product ions.

11. The method of claim 10, wherein the ring electrode has a central longitudinal z-axis and the end electrodes are positioned along the z-axis, and wherein step (e) includes the steps of:

ejecting the product ions from the trap region in directions substantially parallel to the z-axis; and

detecting the ejected product ions using a detector positioned along the z-axis.

12. The method of claim 10, wherein the ring electrode has a central longitudinal z-axis and the end electrodes are positioned along the z-axis, and wherein step (e) includes the steps of:

resonating the product ions in directions substantially parallel to the z-axis; and

B

detecting the ejected product ions using a detector comprising, or integrally mounted with, at least one of the end electrodes.

13. The method of claim 10, wherein the ring electrode has a central longitudinal z-axis and the end electrodes are positioned along the z-axis, and wherein step (e) includes the steps of:

resonating the product ions in directions substantially parallel to the z-axis; and

detecting the ejected product ions using a detector positioned along the z-axis.

14. The method of claim 10, wherein the first frequency is substantially equal to 10 kHz, the second frequency is substantially equal to 500 kHz, and the notch frequency band has width substantially equal to 1 kHz.

15. The method of claim 14, wherein the frequency components of the notched broadband signal have amplitude on the order of 10 volts.

16. The method of claim 10, wherein step (a) includes the step of:

applying a fundamental voltage signal to at least one of the electrodes, wherein the fundamental voltage signal has a radio frequency component and a DC component having an amplitude, and wherein the amplitude of the DC component is

chosen to establish both a desired low frequency cutoff and a desired high frequency cutoff for the trapping field.

17. The method of claim 10, wherein step (a) includes the step of applying a fundamental voltage signal to the ring electrode to establish the trapping field, and wherein step (b) includes the step of:

applying the notched broadband signal to the ring electrode to resonate the unwanted ions out of the trap region in radial directions toward the ring electrode.

18. A mass spectrometry method, including the steps of:

(a) establishing a three-dimensional quadrupole trapping field capable of storing ions within a trap region bounded by a ring electrode and a pair of end electrodes, wherein the ions have resonance frequency within a selected range;

(b) introducing reagent ions having resonance frequency within a notch frequency band into the trap region, and applying a notched broadband signal to at least one of the electrodes to resonate out of the trap region unwanted ions having resonance frequency within a lower frequency range from a first frequency up to the notch frequency band, and within a higher frequency range from the notch frequency band up to second frequency, wherein the notch frequency band is within the selected range;

(c) introducing sample molecules into the trap region;

(d) allowing the sample molecules to react with the reagent ions to produce product ions having resonance frequency within the selected range;

(e) ejecting unwanted ions other than the product ions from the trap;

(f) after step (e), applying a supplemental AC voltage signal to at least one of the electrodes to induce dissociation of the product ions into daughter ions, said supplemental AC voltage signal having a frequency which matches a resonance frequency of the product ions; and

(g) after step (f), detecting the daughter ions.

19. The method of claim 18, also including the step of:

not later than during step (d), changing the trapping field to cause the trapping field to be capable of storing the daughter ions.

SMART & BIGGAR
OTTAWA, CANADA

PATENT AGENTS

B

2101156

1/3

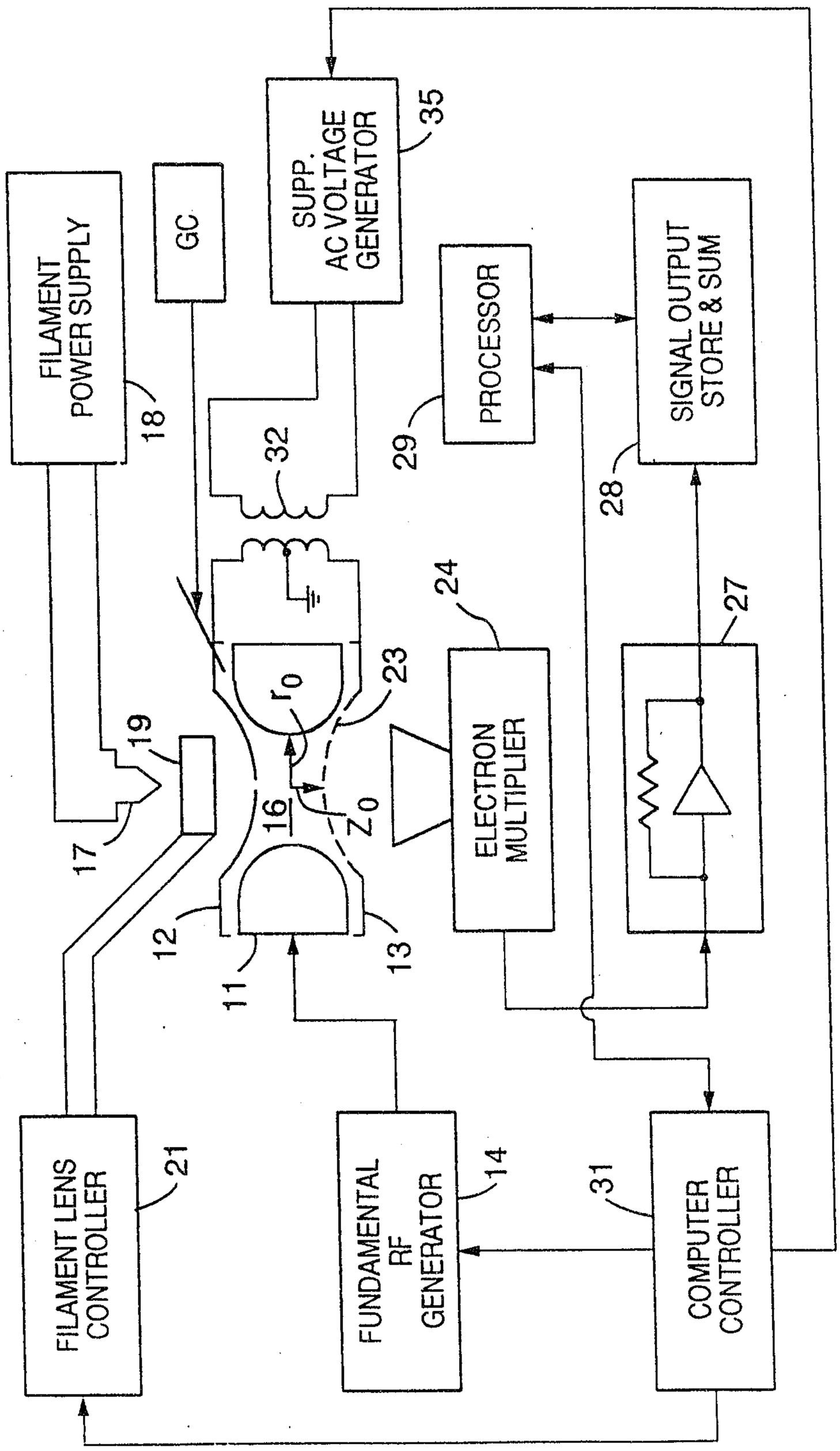

FIG. 1

2101156

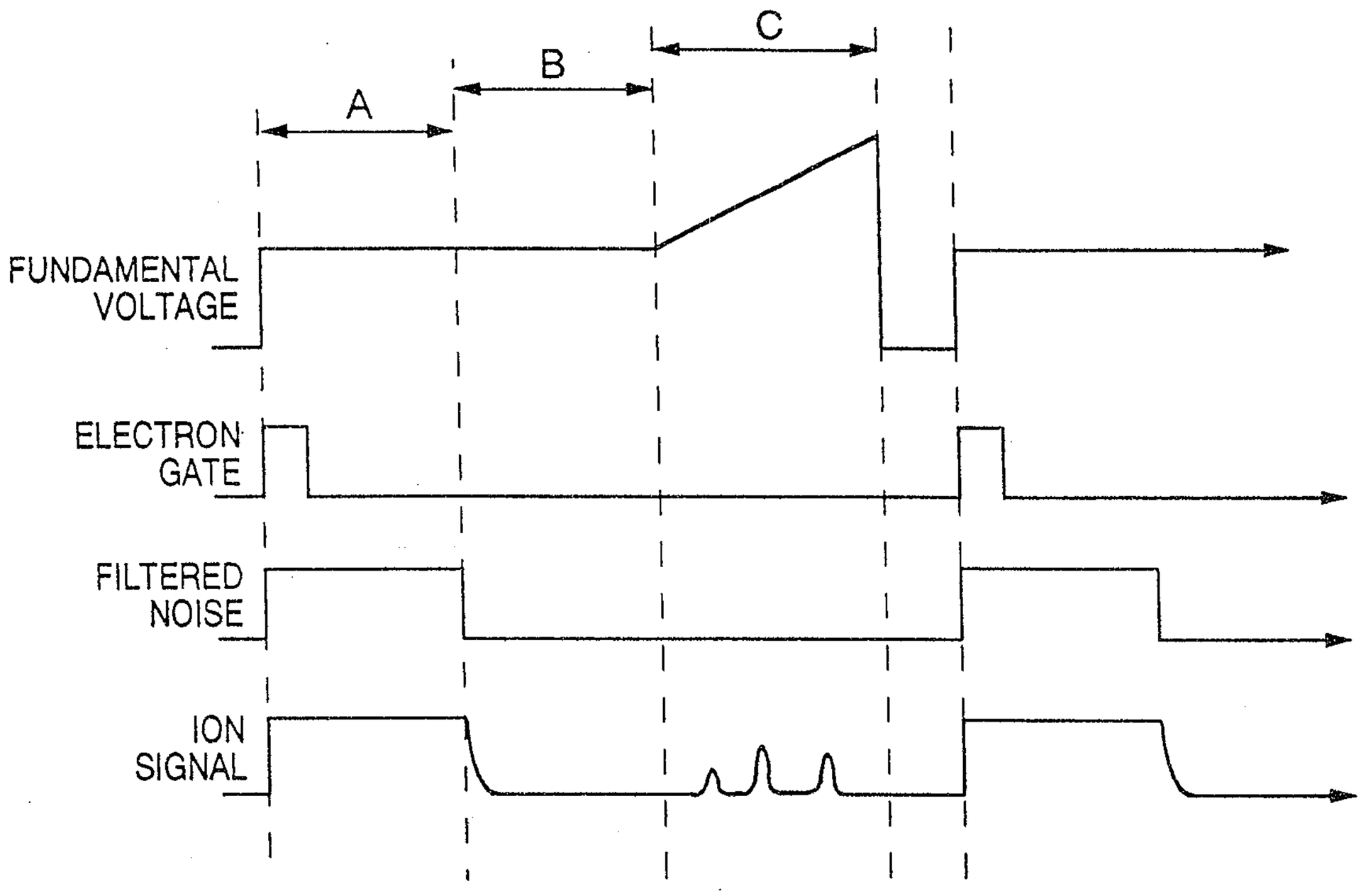

FIG. 2

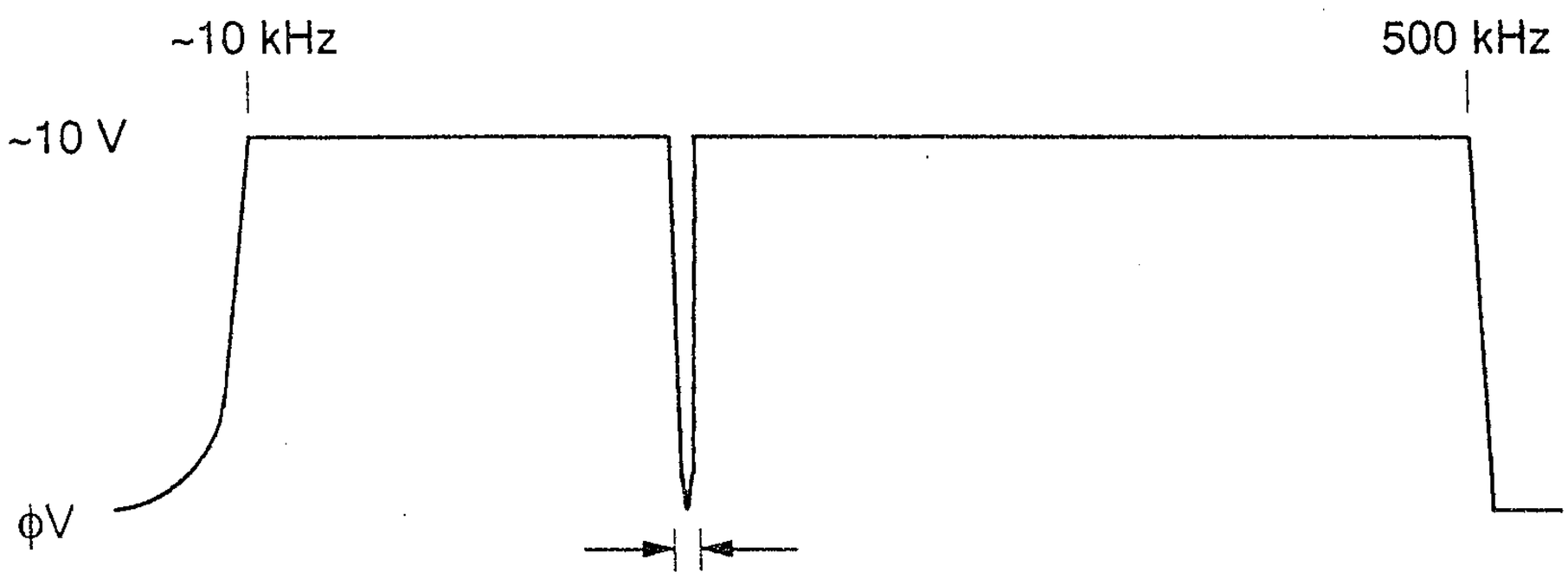

FIG. 3

2101156

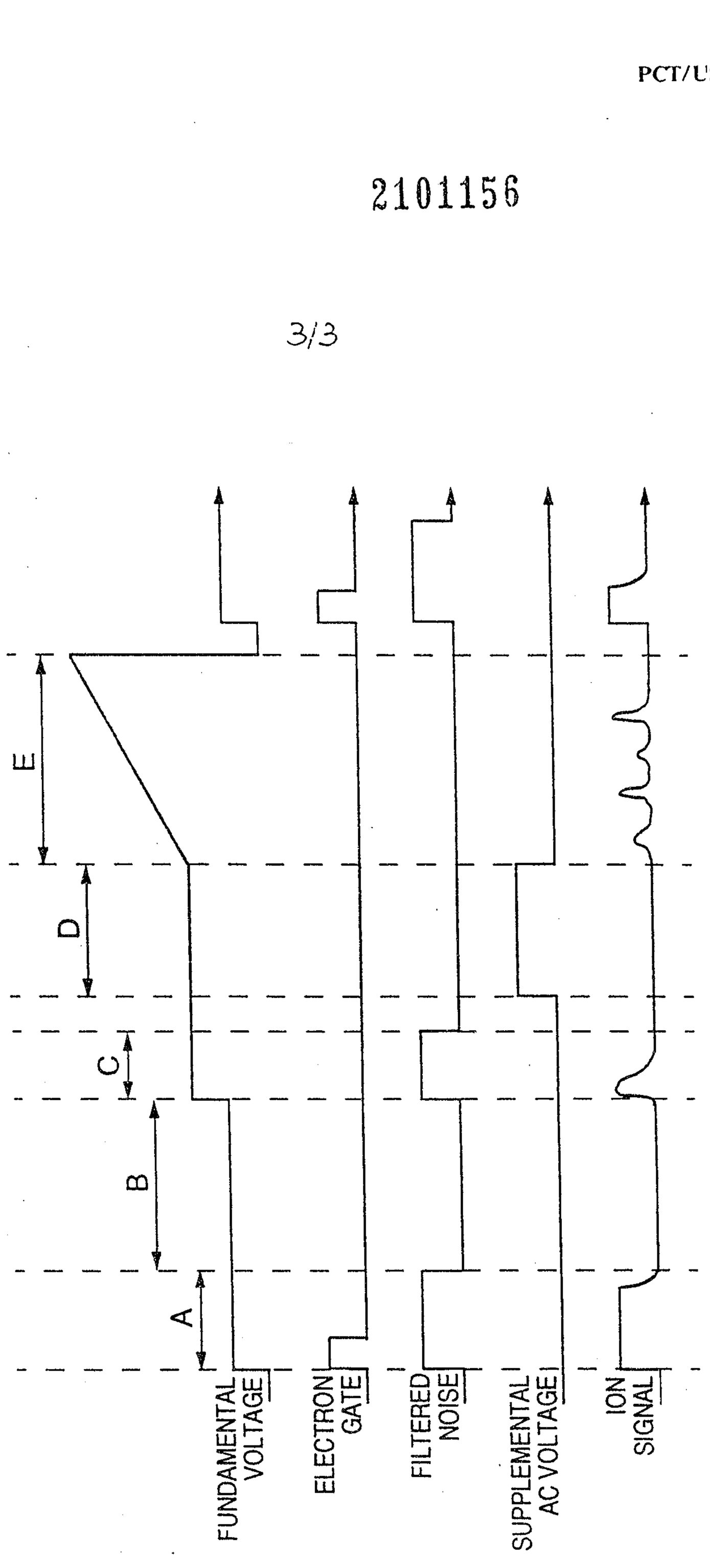

FIG. 4