Office de la Propriété Intellectuelle du Canada
Un organisme d'Industrie Canada

Canadian Intellectual Property Office
An agency of Industry Canada

CA 2832048 A1 2015/05/05

(21) 2 832 048

(12) DEMANDE DE BREVET CANADIEN
CANADIAN PATENT APPLICATION

(13) A1

(22) Date de dépôt/Filing Date: 2013/11/06

(41) Mise à la disp. pub./Open to Public Insp.: 2015/05/05

(30) Priorité/Priority: 2013/11/05 (US14/072,249)

(51) Cl.Int./Int.Cl. *H01R 13/52* (2006.01), *F21S 4/00* (2006.01), *F21V 23/06* (2006.01)

(71) Demandeur/Applicant:
SHANDONG NEON KING ELECTRONICS CO., LTD., CN

(72) Inventeur/Inventor:
ZHAO, QINGEN, CN

(74) Agent: CAMERON IP

(54) Titre : ENSEMBLE ETANCHE POUR GUIRLANDE LUMINEUSE
(54) Title: WATERPROOF ASSEMBLY FOR A LIGHT STRING

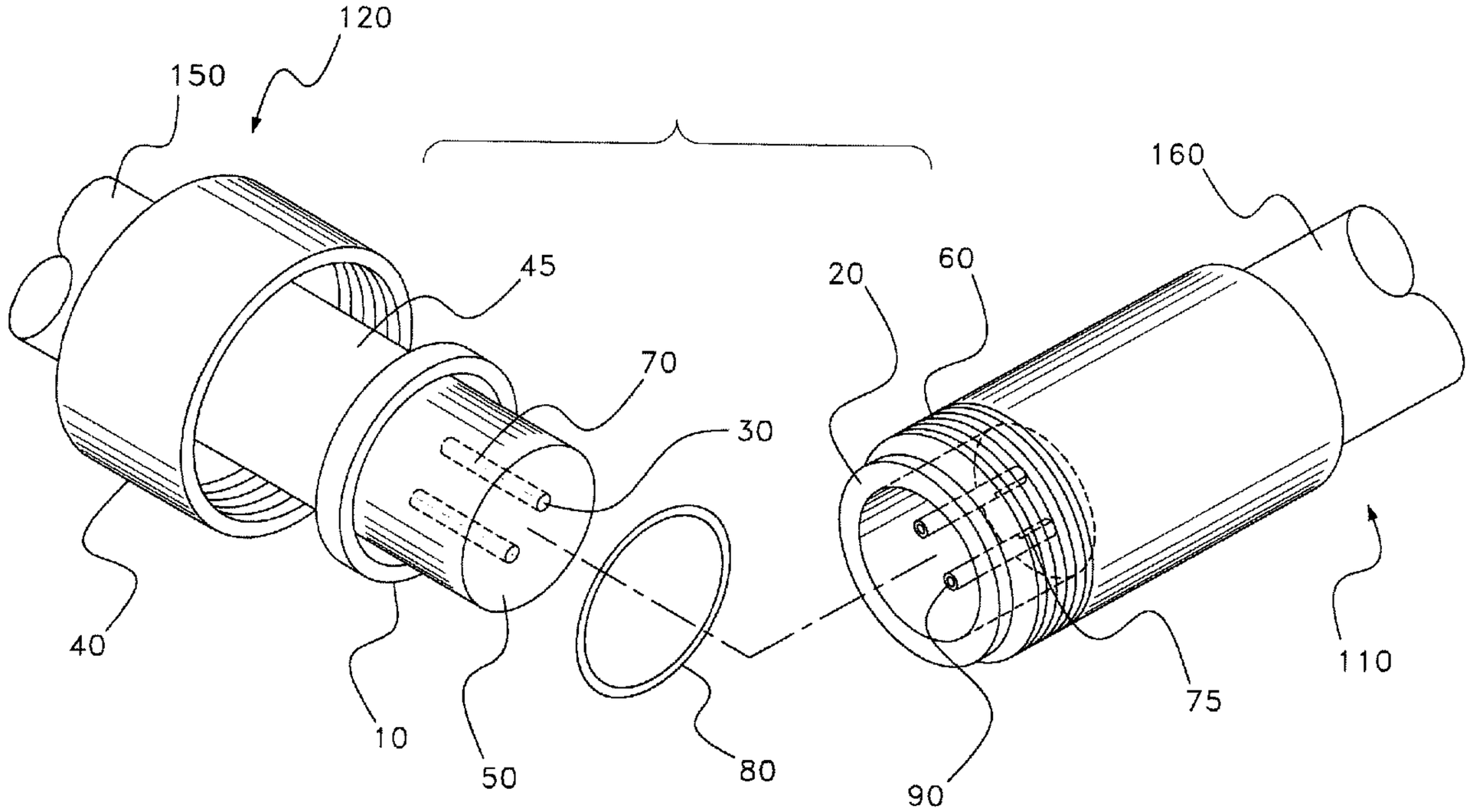

(57) Abrégé/Abstract:
A waterproof light string assembly that comprises two ends that join to complete a circuit. The first end comprises an electrical male conducting element encased within a protective nodule. A second end comprises a protruding sheath having a female conducting element disposed therein and a configuration that accepts a portion of the nodule when said male element enters the sheath. The assembly is designed such that electrical elements are protected from ambient matters such as water and provide improved connectivity.

ABSTRACT

A waterproof light string assembly that comprises two ends that join to complete a circuit. The first end comprises an electrical male conducting element encased within a protective nodule. A second end comprises a protruding sheath having a female conducting element disposed therein and a configuration that accepts a portion of the nodule when said male element enters the sheath. The assembly is designed such that electrical elements are protected from ambient matters such as water and provide improved connectivity.

WATERPROOF ASSEMBLY FOR A LIGHT STRING

I. Background

A. Field of Invention

[0001] The present invention generally relates to lighting and connections, in particular, the present invention relates to an assembly for a light string that has waterproof characteristics and improved connectivity.

B. Description of the Related Art

[0002] Waterproof and or water resistant assemblies for light strings are known. For example, US 6,893,144 (Fan) discloses an assembly, of which reference is incorporated herein. Fan discloses a female connector having two holes (23) that correspond to a male connector having two pins (13) as shown in Fan FIG. 1. Fan identifies Fan FIG. 5 as prior art, which too provides a female connector having two holes (611) that correspond to a male connector having two pins (55). Upon comparison of Fan FIG. 1 with Fan FIG. 5 prior art, it is obvious that Fan merely fuses cited prior art cover (67) to cited prior art shoulder (63) and removes cited prior art threading (671) and (531). Next, to accomplish the goal of Fan FIG. 1, Fan simply adds a cap to the cited prior art first body (51) shown in Fan FIG. 5 and disposes new threading.

[0003] Fan (US 6,893,144) and the prior art cited therein, provide same configurations. As a result, the configuration of Fan and the Fan cited prior art are not enough to protect the electrical connection for similar reasons Fan asserts as failure of prior art. Additionally, the pins provided in both Fan and the Fan cited prior art are exposed and capable of being compromised, affecting integrity of electrical connections. The instant invention overcomes deficiencies of prior art and provides an improved waterproof assembly with improved connectivity.

II. Summary

[0004] The current invention provides an assembly that comprises a first portion having at least one female electrical connection housed within a protective sheath that extends out from an internal base enclosed by an outer casing. A second portion consists of a plug having at least one male electrical connection recessed in a chamber formed therein, that when the male and female portions are combined, the protective sheath surrounds both male and female connections at the same time and encased forming an airtight and waterproof barrier. The resulting connections provide better connectivity and protect the male electrical connections from being damaged.

III. Brief Description of the Drawings

[0005] The invention may take physical form in certain parts and arrangement of parts, some embodiments of which will be described in the specification and illustrated in accompanying drawings which form a part hereof, wherein:

[0006] FIG. 1 is an exploded perspective view of the assembly;

[0007] FIG. 2 is a cross sectional view of the assembly when disconnected ;

[0008] FIG. 3 is a cross sectional view of the assembly when connected and showing engagement between male and female components.

IV. Detailed Description of the Invention

[0009] According to an embodiment of the invention as shown in FIG. 1, a male component **120** is provided and being referenced to that of a plug. Said component **120** has a first end that comprises housing **50** and a second end engaged to a portion of a first light string **150**. Housing **50** is shown as cylindrical but is not limited to a particular geometry, so long as a portion thereof is capable of entering an internal area or opening **85** formed within the female component **110**. The male component **120** further comprises neck **45** that is the intermediary between electrical wires (not shown) and pin **70** and which may provide as guide for cap **40**, which may be slidingly engaged thereto. Male component **120** and female component **110** may be comprised substantially of a non-electrical conductive material such as plastic, or an insulated

material otherwise, and may be formed by processes not limited to molding, 3-D printing, boring, and or other known means.

[0010] Collar **10** is disposed around a periphery of the male component **120**. As show in FIG. 1, collar **10** is located distal to housing **50**, distal to the first end of the male component **120**, and proximal to said neck **45**. The location of collar **10** may however be located in other areas about the male component **120**, so long as it serves as a stop for cap **40** and or provides housing for o-ring **80**, which may include any deformable material capable of preventing passage of unwanted material. While only a single collar **10** is provided, it is within the scope of the invention that there be multiple collars, for example, a collar may be disposed about the second end of said male component **120** (i.e., distal to neck **45**) and used to act as a stop for cap **40** and a second collar may be disposed proximal thereto (i.e. closer to the first end of said male component **120**) and house o-ring **80**.

[0011] Extending in a proximal direction from collar **10** is housing **50** located at about the first end of male component **120**. As shown, housing **50** comprises two holes **30** extending distal from its opening and having a depth, l_1. As provided in FIG. 2, holes **30** encase male electrical connections **70** recessed therein and referred to as pin, which may originate and or extend from base **130** of hole **30** and have a length equal to about l_1. The length of pins **30** may be equal or askew to each depending on configuration of a corresponding receptor **90** to be explained further. The length of pin **30** may be in the range of greater than $0.01l_1$ to about l_1. As shown in FIG. 2, length of pins **30** is about equal to each and about $0.90l_1$. Said pin **70** is

designed to communicate an electrical charge between said male component **120** and female component **110** when in contact with (or sufficient proximity to) female contact **75**.

[0012] Female component **110** has an opening **85** defined by rim **20** located at a first, proximal end of the female component **110**, and is connected to a second light rope **160** at its second end. Said opening **85** leads to an internal area formed within the female component **110** that extends therein (i.e., distal) and is further defined by base **150** and at least one wall that has a length, l_2, as measured from proximal end of rim **20** to base **150**. The female component **110**, which could be referred to as a socket, further comprises an outer shell consisting of threading **60** disposed on a portion of an exterior surface. As shown, threading **60** is in a location proximal to a smooth region **100** and distal to said rim **20**.

[0013] As shown, rim **20** forms a perimeter about opening **85**. Said opening **85** is shaped and sized to accept housing **50**. Extending out and or in a proximal direction from base **150** is a conduit and or sheath **90**. The length of the conduit **90** may be about less than or equal to l_2. As shown in FIG. 2, length of sheath **90** is about $0.85l_2$. Sheath **90** houses and or is formed around female electrical connection **75** and provides protection to said connection as well as a guide for pin **70**. Sheath **90** has a diameter d_3 proximal to diameter d_4. And, hole **30** has a diameter d_1 proximal to diameter d_2. In an embodiment, d_3 is greater than d_1 but less than d_2 such that when sheath **90** enters hole **30** the proximal end **95** of sheath **90** can frictionally engage with an interior wall of hole **30** and act as a barrier to passage of unwanted material, for example water. In this embodiment, sheath **90** may comprise a deformable material, at least at its proximal end **95**.

[0014] FIG. 3 is a cross sectional view of the assembly showing the engagement between the male **120** and female **110** connectors. As shown, sheath **90** surrounds pin **70** which is in electrical communication with female contact **75**. Cap **40** internal threading is combined with threads **60**. In practice, when cap **40** is tightened thereto extension **20** compresses o-ring **80** preventing passage of unwanted materials such as liquid and or gas. As shown, when the male component **120** and female component **110** are engaged and or connected, and cap **40** threads to **60**, rim **20** is drawn to o-ring **80**. When cap **40** is tightened and or secured thereto, rim **20** causes o-ring **80** it to deform and fill void therein to prevent passage of unwanted materials such as liquid and or gas. The interaction further acts as an airtight and or waterproof barrier therein.

Having thus described the invention, what is claimed as new and desired to be secured by Letters Patent is:

What is claimed is:

1. A waterproof light rope assembly comprising:

a male component having an opening formed at a proximal end extending distal into said male component and housing a portion of an electrical conducting pin; and

a female component having an opening at its proximal end and an internal area therein having a base, wherein at least one sheath extending from said base is disposed within said internal area and houses a portion of an electrical contact designed to communicate with said electrical conducting pin;

2. The assembly of claim 1 further comprising a cap sliding engaged with a portion of said male component, and configured to secure said male component to said female component when joined.

3. The assembly of claim 2 further comprising a collar disposed about a periphery of said male component, distal to its proximal end, wherein the collar engages a portion of the cap to act as a stop to prevent the cap from disconnecting from the male component.

4. The assembly of claim 1 wherein the female component has an extension formed about its opening that when the female component is joined with the male component and

secured therein, the extension contacts the o-ring, preventing passage of unwanted material therethrough.

5. A waterproof light rope assembly comprising:

a female connector having an internal area defined by a rim disposed about an opening at one end and an internal base opposite said opening;

a conduit extending from said base of the female connector that contains a portion of an electrical contact;

an electrical conducting pin recessed within a male connector, wherein the conducting pin is accessible by an opening formed on an end of said male connector; and

wherein said conduit is sized and shaped to enter opening formed on male connector, and enter a sufficient distance such that said pin is in sufficient proximity to an electrical contact.

6. The assembly of claim 5 wherein when said pin is in sufficient proximity to an electrical contact apportion of said male portion is within said internal area defined by said female connector.

7. The assembly of claim 5 further comprising a cap that connects said male connector and said female connector.

8. The assembly of claim 5 wherein said male connector comprises an o-ring disposed about its periphery that is contacted by said rim to prevent passage of unwanted material.

9. The assembly of claim 7 wherein a collar is formed about a periphery of said male component that acts as a stop for said cap.

10. The assembly of claim 9, wherein said cap comprises internal threading that corresponds to threading formed about an exterior surface of said female component, such that when the male and female components are joined, the cap may be tighten to secure said connection.

11. The assembly of claim 8 wherein a collar is formed about a periphery of said male component that houses said o-ring and provides a boundary for the o-ring such that when said o-ring deforms and sufficiently fill said boundary such that unwanted material is unable to pass therethrough.

12. A waterproof light rope assembly comprising:

a male connector having a first end that has at least one hole opening formed thereon that extends distally into said first end and houses an electrical conducting pin, and a second end engaged to a portion of a first light string;

a female connector having a rim that defines an opening at a first end forming an internal area defined by an internal base therein, and a second end engaged to a portion of a second light string; and

a sheath encasing an electrical contact, disposed within said internal area, and extending from said base towards the opening.

13. The assembly of claim 12 further wherein said first end of said female connector is sized and shaped to accept said male connector and provide transmission of an electrical charge therebetween.

14. The assembly of claim 12 wherein the sheath has an opening that has a diameter less than the diameter of the hole opening such that it may pass therethrough and surround the pin disposed therein, while joining the pin to the electrical contact.

15. The assembly of claim 14 wherein the diameter of the sheath opening is greater than a diameter of the hole distal to the opening of the hole such that wall of the sheath opening may frictionally engage with internal wall of hole preventing passage of unwanted material.

16. The assembly of claim 12 further comprising:

a cap slidingly engaged to said male connector and configured to secure the male and female connector when joined;

a collar disposed around a periphery of the male connector distal to the first end of the male connector that serves as a stop for the cap.

17. The assembly of claim 16 wherein an o-ring is disposed about said collar, such that when the male and female components are combined the o-ring is contacted by said rim which deforms the o-ring and prevents passing of unwanted material therethrough.

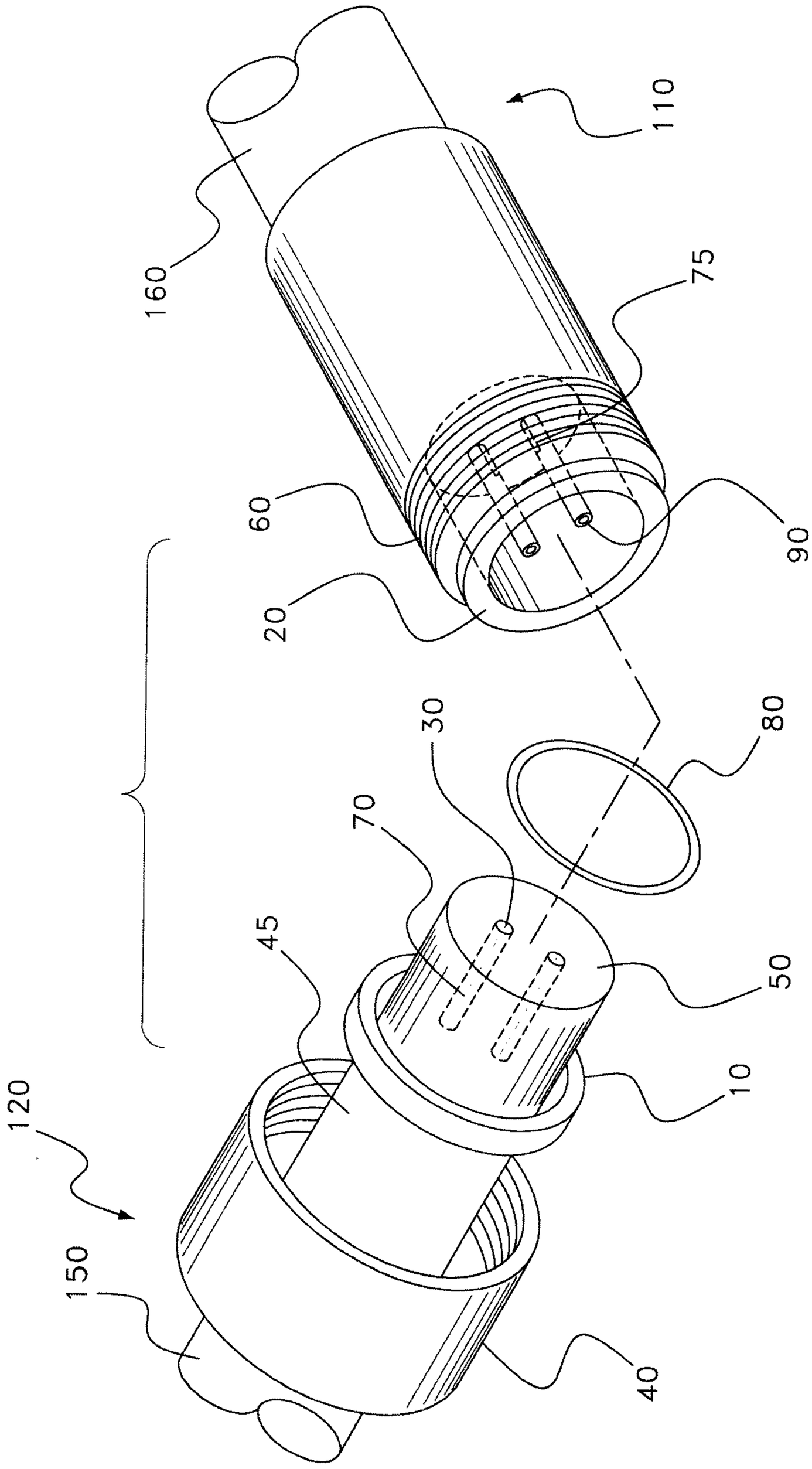

Fig. 1

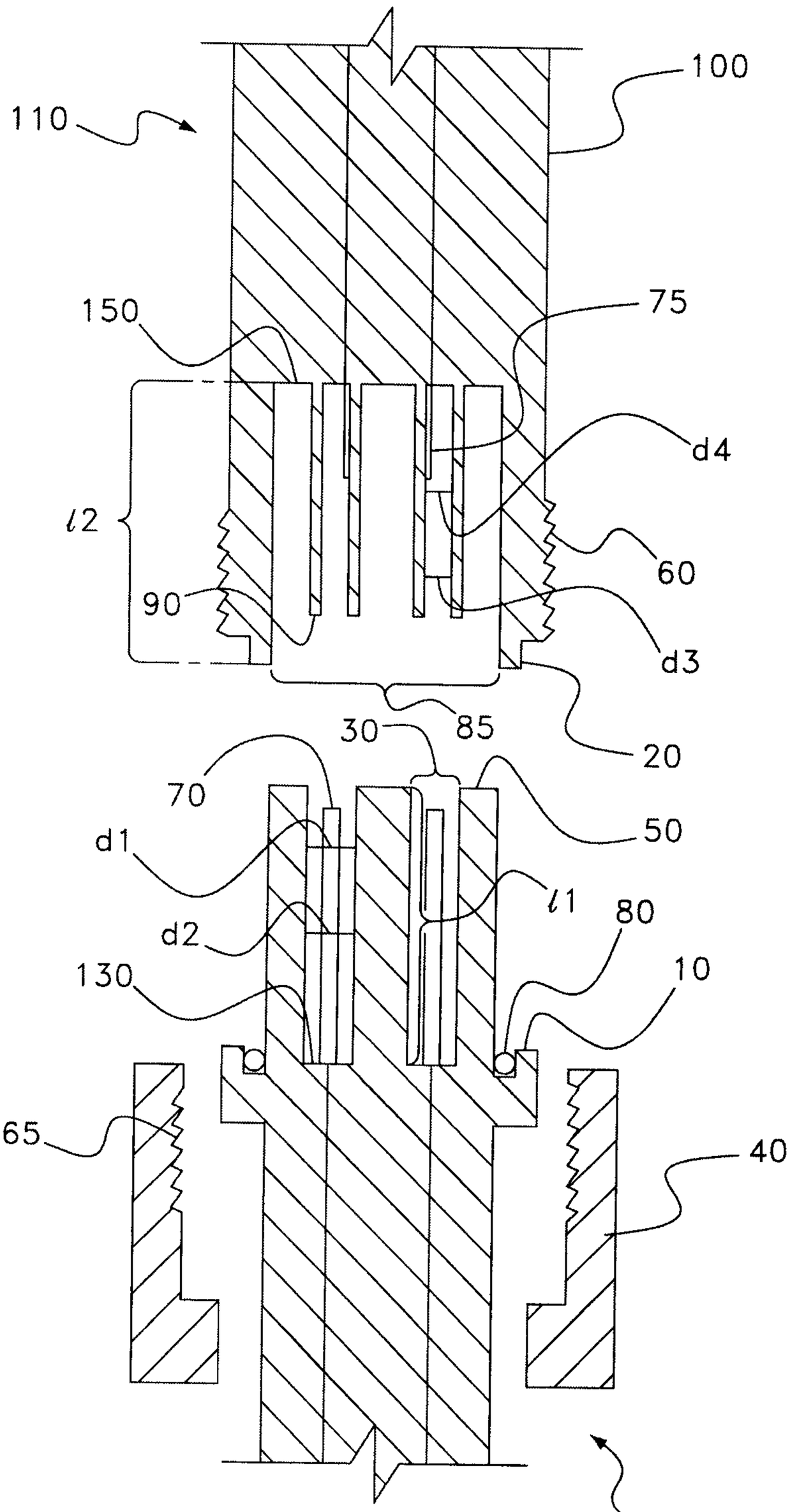
100
110
150
75
d4
l2
60
90
d3
85
30
20
70
50
d1
l1
80
d2
10
130
65
40
120

Fig. 2

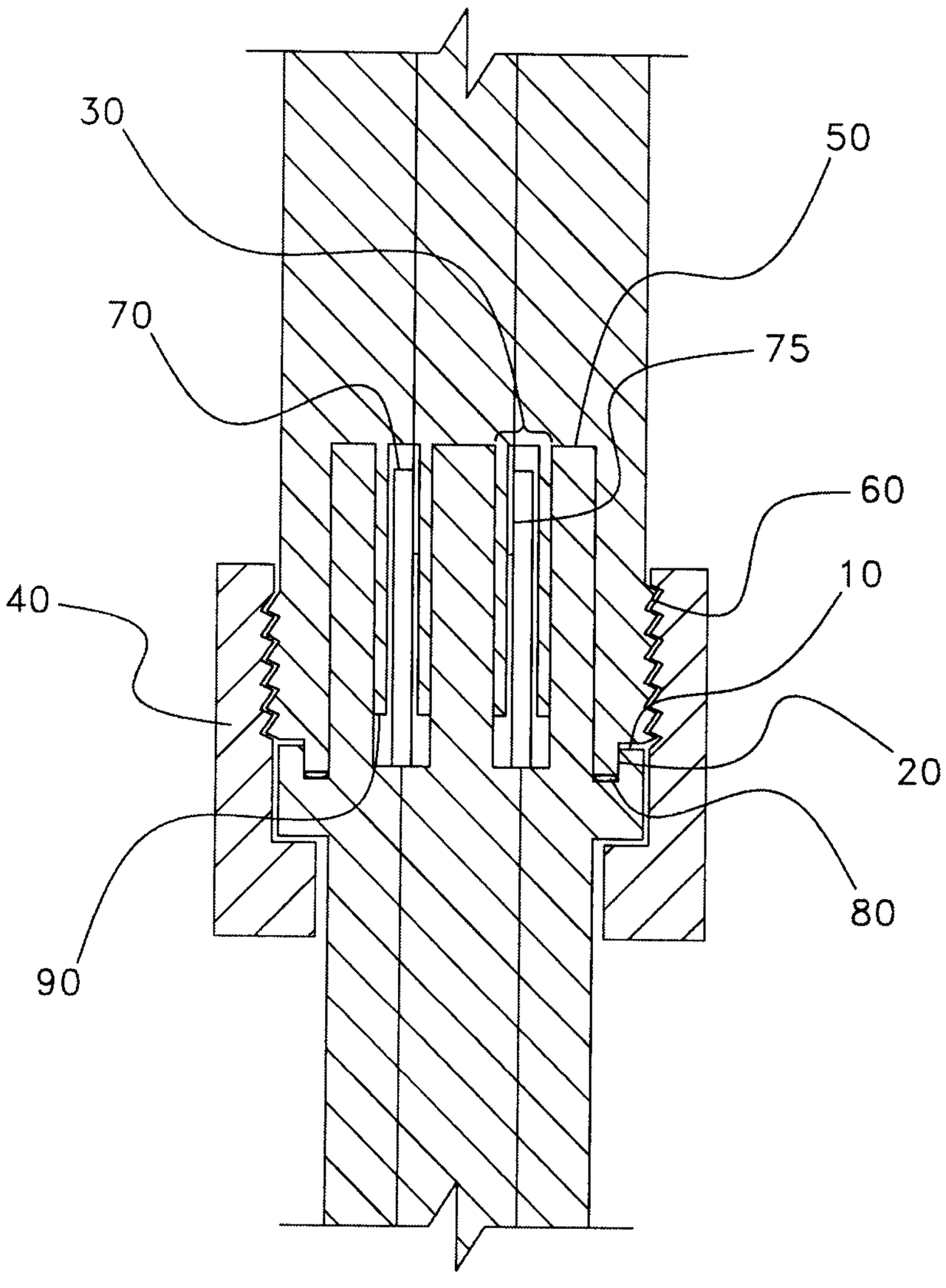

Fig. 3

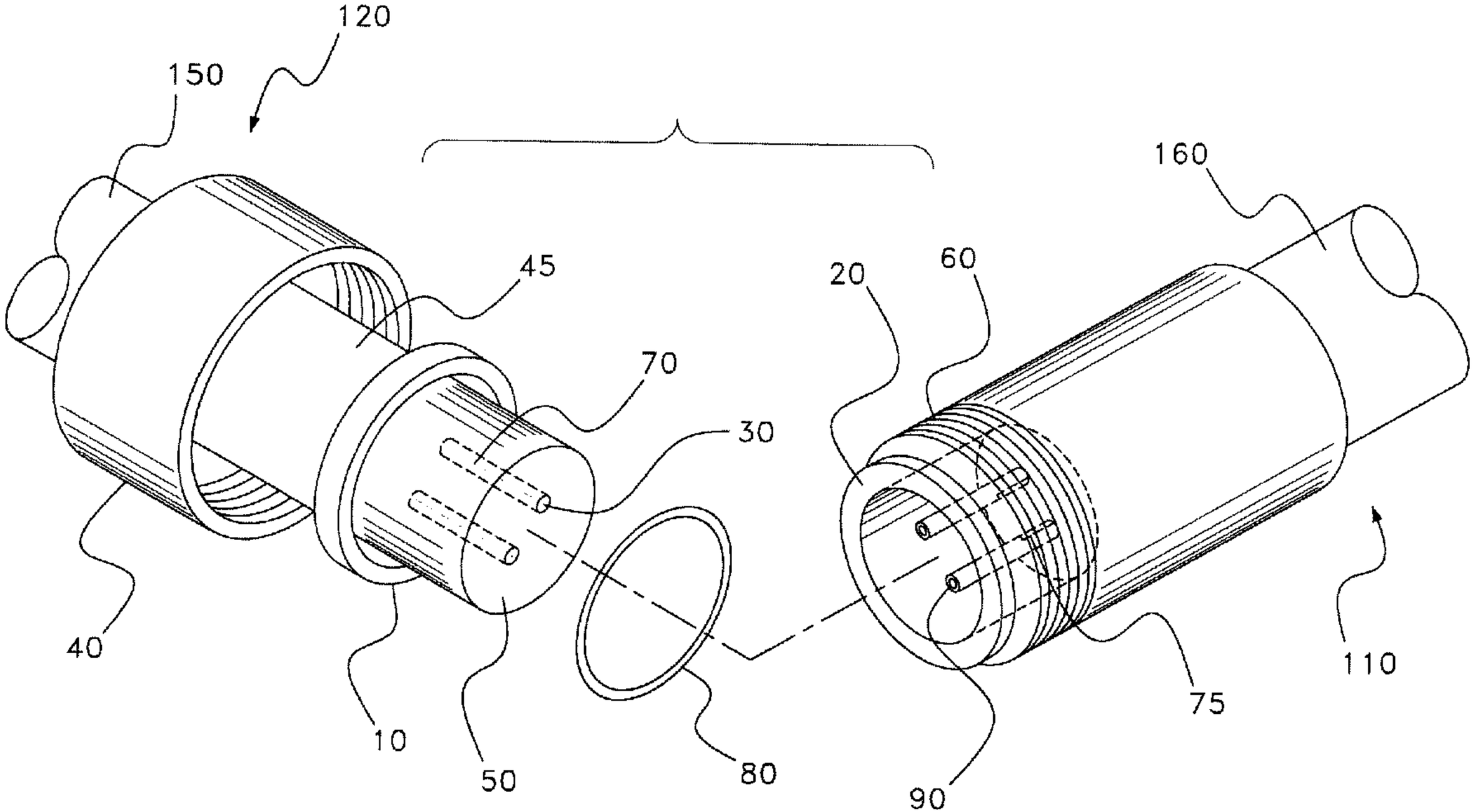
120
150
45
70
30
40
10
50
80
90
20
60
160
75
110