Feb. 9, 1965 W. LIMBERG 3,168,748

HAT WITH POWER COOLING

Filed June 8, 1961

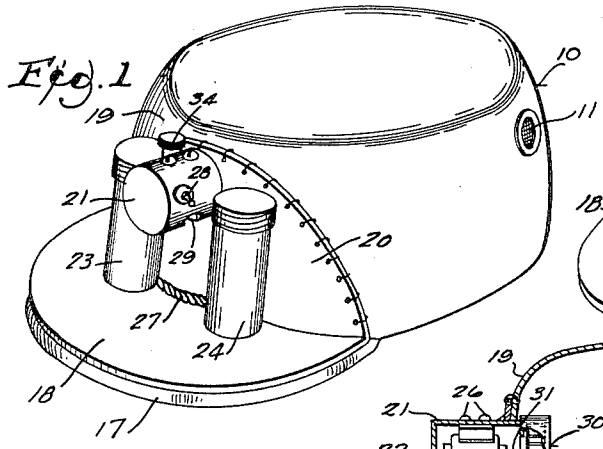

Fig. 1

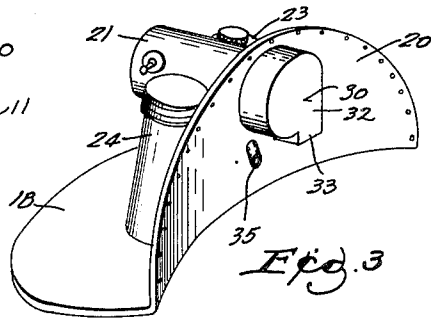

Fig. 3

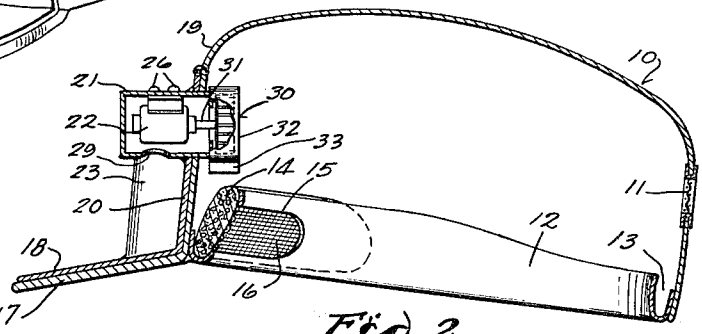

Fig. 2

Fig. 4

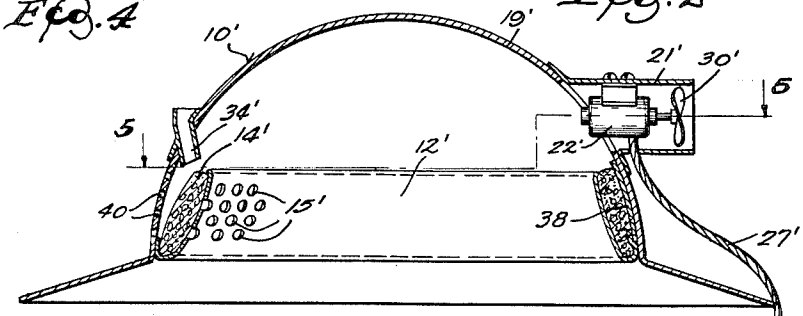

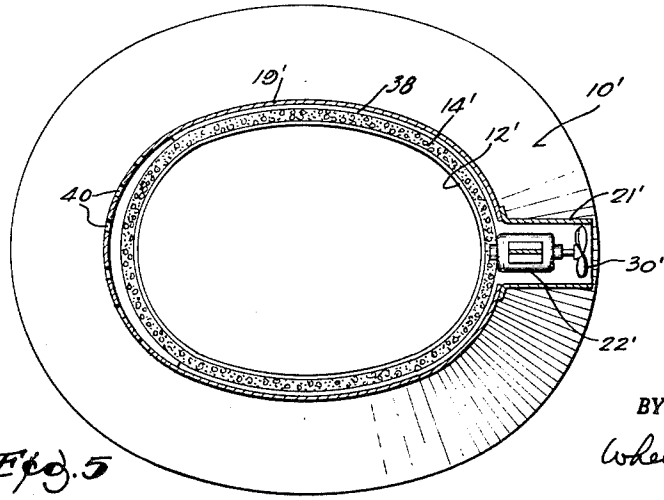

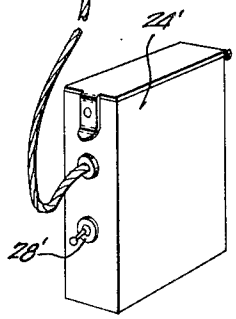

Fig. 5

INVENTOR.
WAYNE LIMBERG
BY
Wheeler, Wheeler & Wheeler
ATTORNEYS

United States Patent Office 3,168,748
Patented Feb. 9, 1965

3,168,748

HAT WITH POWER COOLING

Wayne Limberg, P.O. Box 525, Osseo, Wis.

Filed June 8, 1961, Ser. No. 115,681
7 Claims. (Cl. 2—171.3)

This invention relates to a hat with power cooling. A motor-driven fan circulates air through the hat. In addition to the cooling effect of the circulating air, it is preferred to employ a watersoaked pad exposed to the wearer's forehead so that the circulating air will cool the forehead by evaporation. Desirably, the pad has sufficient extent to constitute a reservoir. Batteries for operation of the motor may be mounted directly on the hat or in a battery case carried elsewhere upon the person.

In the drawings:

FIG. 1 is a view in perspective of a cap embodying the invention.

FIG. 2 is a view taken on a reduced scale in longitudinal section through the cap shown in FIG. 1.

FIG. 3 is a view in perspective of the self-contained motor battery case and fan for attachment to an otherwise generally conventional hat.

FIG. 4 is a view taken in longitudinal section through a different type of hat showing a different motor and fan arrangement.

FIG. 5 is a view taken in horizontal section on the line 5—5 of FIG. 4.

The hat shown in FIGS. 1 and 2 comprises a cap **10** which is of generally conventional design being provided with vents at **11** and a sweatband at **12**. In accordance with the present invention, the sweatband is desirably channeled as shown at **13** to receive a sponge **14** which extends circumferentially of the hat to any desired extent. Also, the sweatband is desirably provided with an aperture at **15** which may be spanned, optionally, by loosely woven net or fabric **16** to support the sponge **14** slightly clear of the wearer's forehead otherwise exposed by the opening **15**.

The cap **10** has a visor **17** upon which the invention contemplates the mounting of a bracket **18** having angularly related portions engaged with the visor and with the crown portion **19** of the cap. Attached to the upright flange **20** of the bracket or fitting **18** is a motor housing shell **21** within which is an electric motor **22** designed to be operated by batteries for which battery cases are provided at **23** and **24**. The motor **22** is desirably connected to the upper part of the shell **21** as by means of tap screws **26**. The batteries (not shown) within the battery cases **23** and **24** will be connected by suitable wiring **27** to each other and to the motor **22**. A switch **28** is desirably provided for enabling the operator to control the functioning of the motor.

Air from the exterior atmosphere is admitted to the shell **21** through a port **29**. This air passes to the fan **30** mounted on the armature shaft **31** of motor **22**. Desirably the fan used in this device is a blower type fan mounted in a fan casing **32** which has a tangential outlet **33** directed downwardly against the pad **14** in the forward part of the cap. The air passing over the wet pad evaporates the water therefrom and exerts a cooling effect. The moisture-laden air escapes through the vents **11**.

A filler spout is desirably provided at **34** which has a duct **35** leading through the flange **20** of the bracket **18** for replenishing the moisture in the sponge pad **14**.

The hat **10'** shown in FIG. 4 has the form of a helmet provided interiorly with a sweatband **12'** about which the pad **14'** extends circumferentially. The band has a number of apertures **15'** in the areas of the wearer's forehead so that the water in the sponge pad **14'** will withdraw heat from the wearer's forehead and give off such heat by evaporation of air traversing the sponge.

The sponge pad **14'** is protected by a waterproof ply **38** from the crown portion **19'** of the hat but this ply terminates in front of the hat and leaves the sponge pad **14'** exposed in the path of air entering through the inlet ports **40**.

The motor **22'** is mounted in a tubular case **21'** disposed at the rear of the hat. In this instance, the fan comprises a propeller-like fan **30'** and it will be noted that the air circulates through this hat by suction so the interior of the hat is under partial vacuum, thus facilitating moisture evaporation. Water evaporated may be replaced through the spout provided at **34'**.

A cord **27'** leads to battery case **24'** which may be carried anywhere on the person and has its own control switch **28'**.

The types of fans used and the fan locations and the other details in which the arrangements differ will be understood to be representative and interchangeable suggestions applicable to other embodiments of the invention and to other types of hats. I do not desire to limit my invention except in the terms of the accompanying claims.

I claim:

1. A hat comprising the combination with a crown, of means including a circumferentially extending sweat band conected to the bottom of the crown and adapted to be located at the level of the wearer's forehead for supporting the crown, said sweat band being connected at its lower margin with the bottom of the crown and the crown adapted to extend free of the wearer's head above the lower margin of the sweat band, the crown being provided with an air inlet port and an air outlet port above the level of the sweat band, and a motor driven fan connected with one of said ports for circulating air through the crown, and means for cooling air circulated through said crown and including a reservoir pad interposed between the crown and an upper portion of the sweat band, the air inlet port with which the crown is provided including means for directing incoming air onto said pad for evaporation of water therefrom.

2. A hat according to claim 1 in which the motor driven fan has a mounting on the outside of the crown and said mounting also includes battery case means supported thereby from the crown.

3. A hat according to claim 1 in further combination with means for cooling the air circulated through the crown by said fan, said means including a water reservoir pad disposed between the crown and the said lower margin of the sweat band, said crown having filler spout means for guiding water supplied to said pad.

4. At hat according to claim 1 in further combination with a visor conected to the crown and having a flange extending upwardly and secured to the front of the crown, a flange having an opening in registry with one of said ports, a motor housing shell extending through the openings and said last mentioned port, the motor and fan being mounted on said shell, battery case means connected with said visor.

5. A hat according to claim 1, the port in which the motor driven fan is mounted comprising a tubular shell connected with the crown and to which the motor driven fan is attached, said shell constituting a passage for air set in motion by the fan, said passage communicating at one end with the interior of the crown and at its other end with the atmosphere.

6. A hat according to claim 5 in which said shell is connected with the crown at the air exhaust port therefrom, the inlet port constituting spout means for replenishing water in said pad as well as the aforesaid means for directing incoming air onto said pad.

7. A hat according to claim 5 in which the said shell is mounted on the crown at the inlet port thereof and said fan comprises a centrifugal fan having a peripheral outlet directed toward said pad.

References Cited by the Examiner

UNITED STATES PATENTS

432,728	7/90	Eliel	2—171.3
581,129	4/97	Nevius	2—199 X
585,186	6/97	Cross	2—181.6
735,790	8/03	Meerza	2—171.3
935,556	9/09	Smith	2—171.4
1,493,463	5/24	Brock	2—199 X

2,007,821	7/35	Uriwal	2—193
2,875,447	3/59	Goldmerstein	2—171.2
2,989,049	6/61	Crouzet	2—185 X
2,994,090	8/61	Ostwald	2—183 X
3,045,450	7/62	Chandler	62—309

FOREIGN PATENTS

449,456	6/48	Canada.
699,022	10/53	Great Britain.

JORDAN FRANKLIN, *Primary Examiner.*

THOMAS J. HICKEY, DAVID J. WILLIAMOWSKY, *Examiners.*