United States Patent [19]

Burst et al.

[11] **3,821,821**

[45] **July 2, 1974**

[54] **ELECTRICALLY OPERABLE HOSPITAL BED**

[75] Inventors: **Francis J. Burst,** Batesville; **Daniel R. Tekulve,** Oldenburg; **James S. Adams,** Batesville, all of Ind.

[73] Assignee: **Hill-Rom Company, Inc.,** Batesville, Ind.

[22] Filed: **Aug. 21, 1972**

[21] Appl. No.: **282,177**

[52] **U.S. Cl.** **5/68,** 5/66

[51] **Int. Cl.** **A61g 7/10,** A47c 3/32

[58] **Field of Search** 5/63, 69; 200/5

[56] **References Cited**

UNITED STATES PATENTS

1,908,530	5/1933	Nixon et al.	5/68 X
3,237,212	3/1966	Hillenbrand et al.	5/68
3,414,913	12/1968	Stanley et al.	5/68
3,492,679	2/1970	Drew	5/68
3,510,886	5/1970	Benoit et al.	5/68 X
3,633,225	1/1972	Burst et al.	5/68

Primary Examiner—Casmir A. Nunberg

[57] **ABSTRACT**

An electrically operable hospital bed having a stationary frame, a relatively movable frame supported on the stationary frame and an articulated mattress support frame secured to the movable frame. The mattress support frame is positionable in a plurality of body supporting positions including elevation of the head end and elevation of the thigh section. Movement of the head end section to inclined body supporting positions causes simultaneous movement of the movable frame and mattress supporting frame toward the head end of the bed.

The stationary frame is supported upon the floor by telescoping legs operable through cable mechanism to adjust bed height. A Trendelenburg mechanism is provided to selectively restrain cables associated with head end or foot end legs to accomplish Trendelenburg and reverse Trendelenburg positioning of the bed.

An automatic knee-break mechanism selectively provides automatic elevation of the thigh section of the mattress support frame upon elevation of the head section. Selectively activated camming means coact between the stationary frame and the thigh section to provide automatic thigh elevation.

13 Claims, 15 Drawing Figures

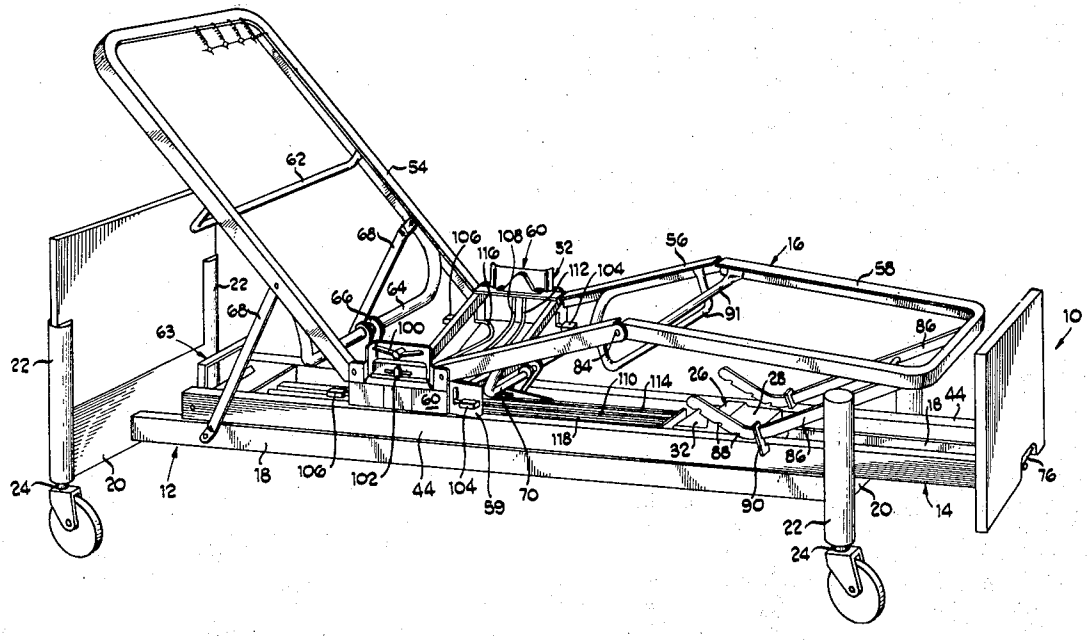

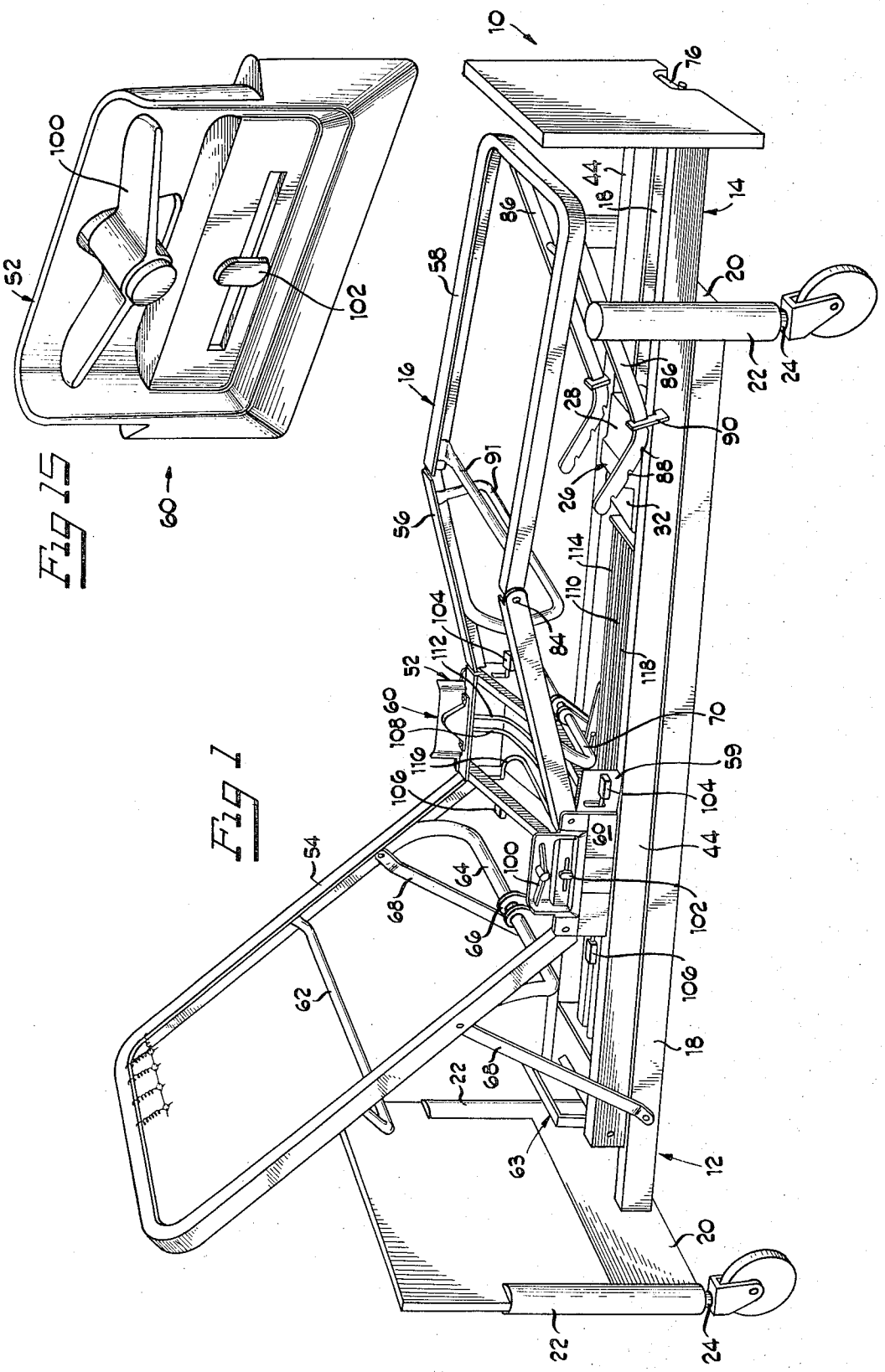
10
76
44
18
14
20
22
24
86
58
16
28
90
88
26
32
91
56
114
110
84
118
104
112
52
60
108
116
106
70
59
54
64
100
102
66
68
62
63
12

Fig 15

Fig 1

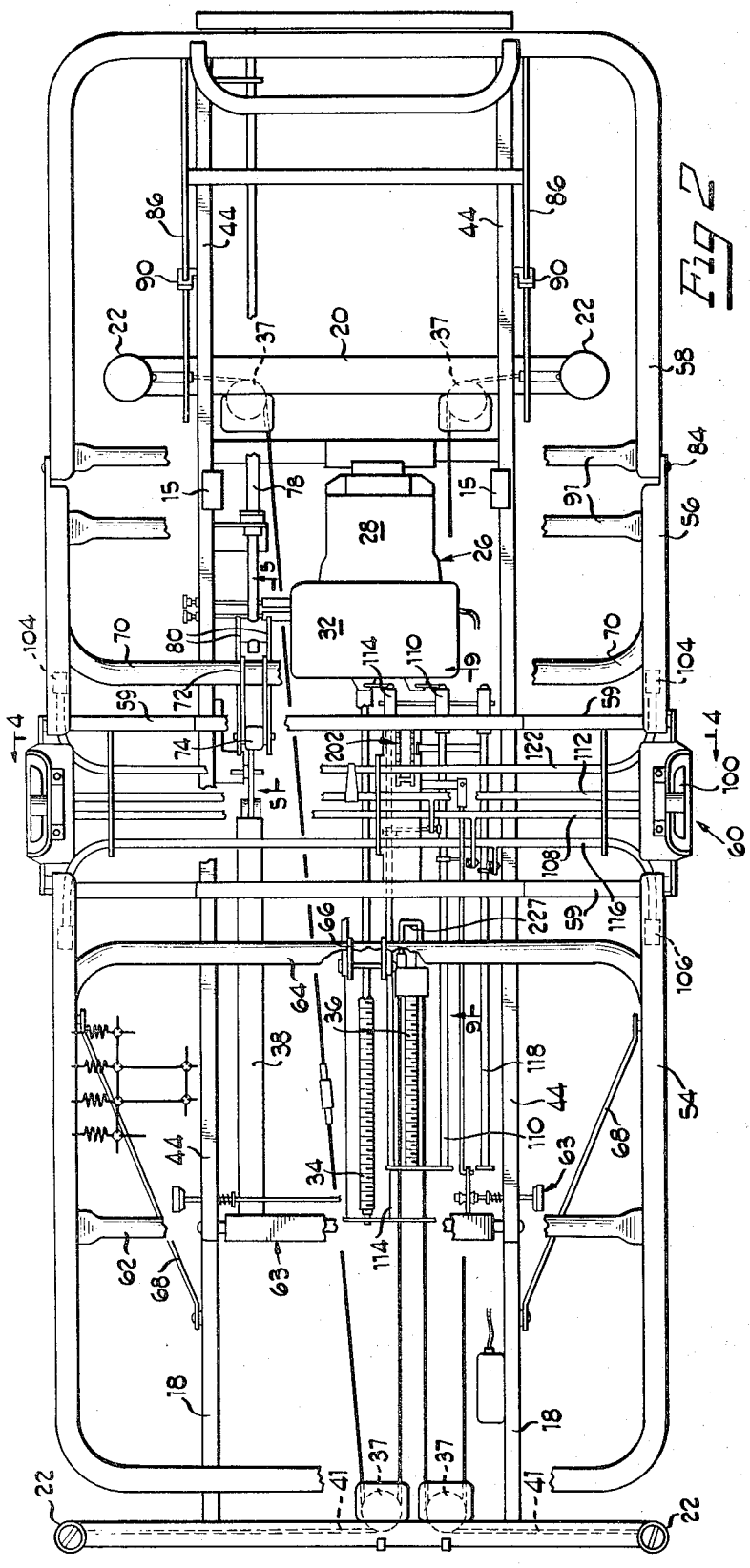

Fig 2

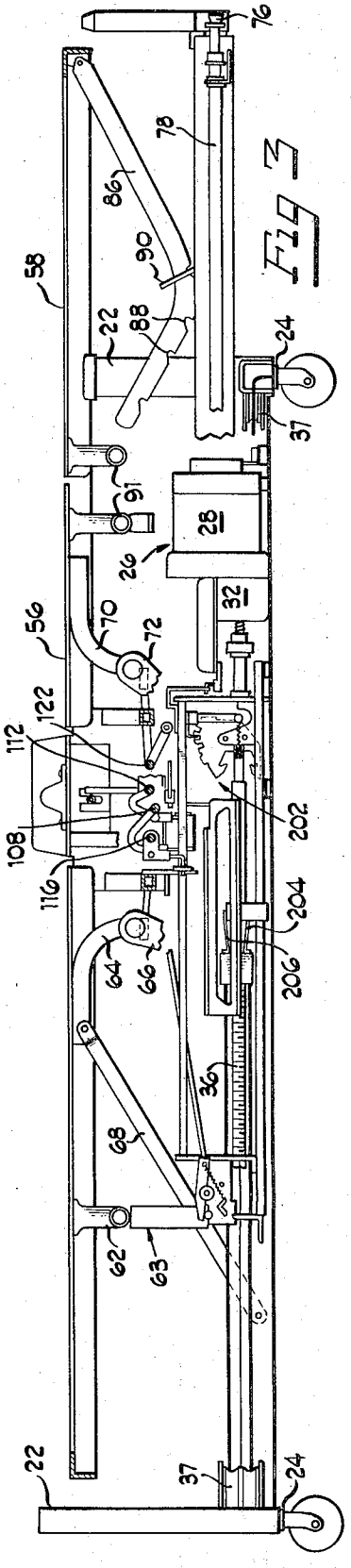

Fig 3

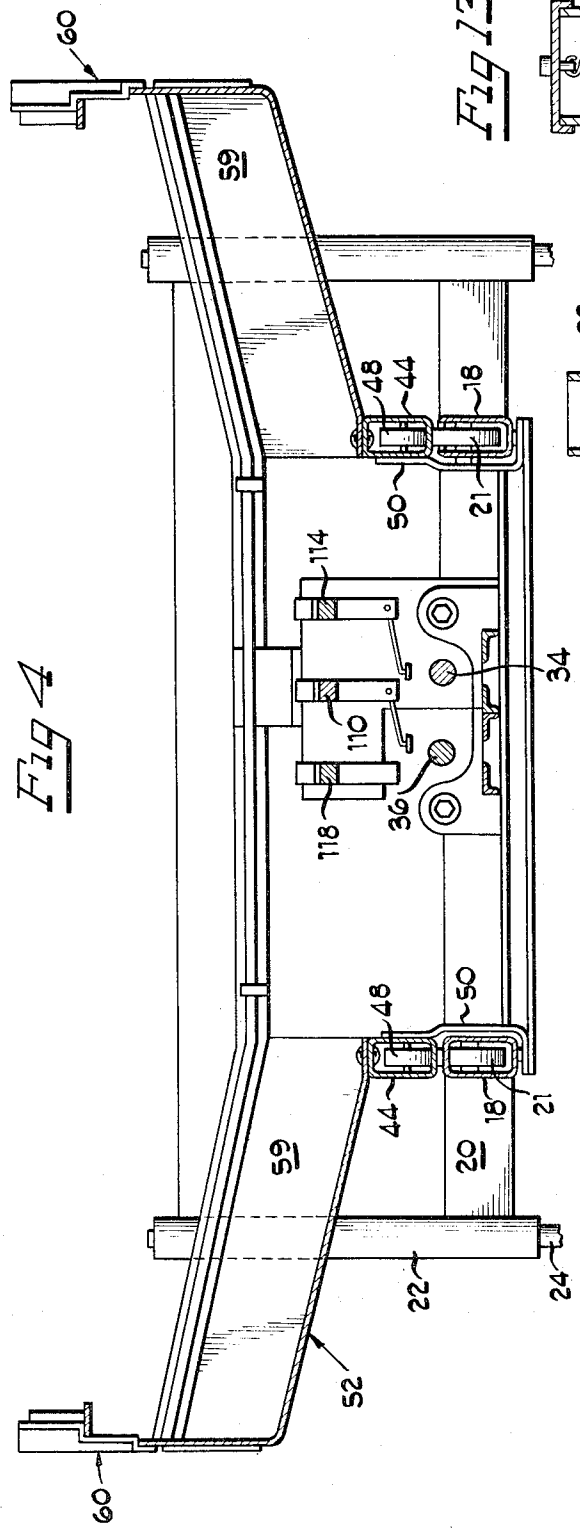

Fig 4

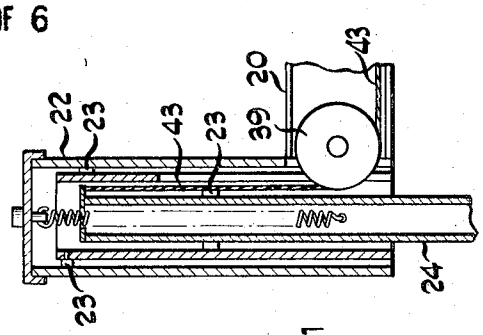

Fig 13

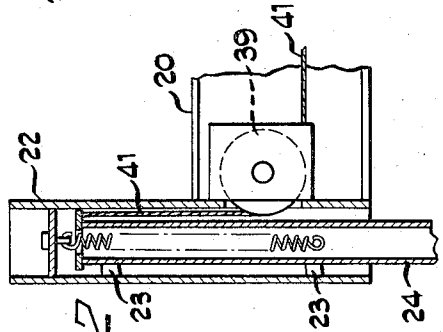

Fig 12

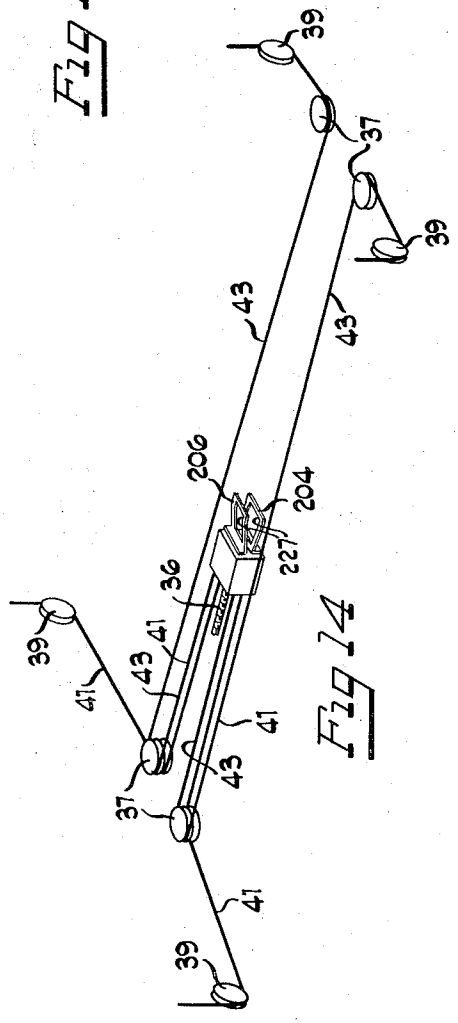

Fig 14

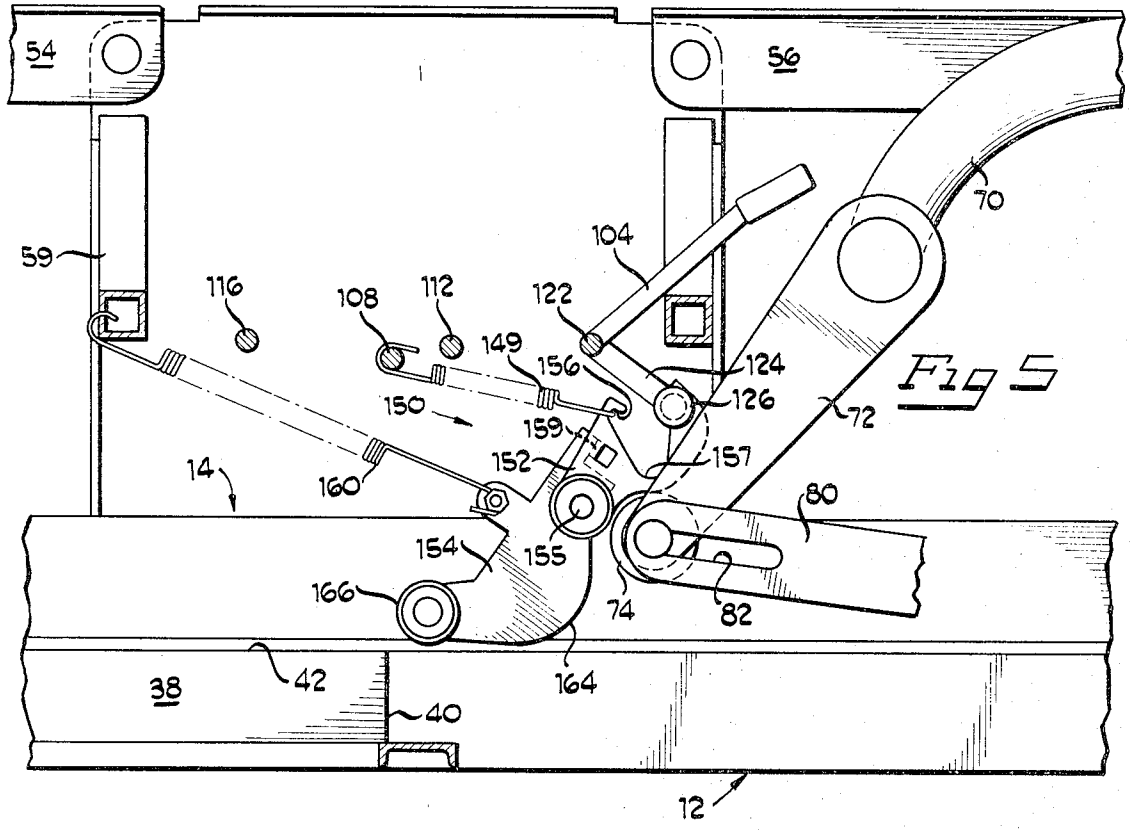
54
56
59
116
108
112
122
104
70
149
156
124
126
150
159
72
152
157
14
160
80
154
155
166
74
82
38
42
164
40
12

Fig 5

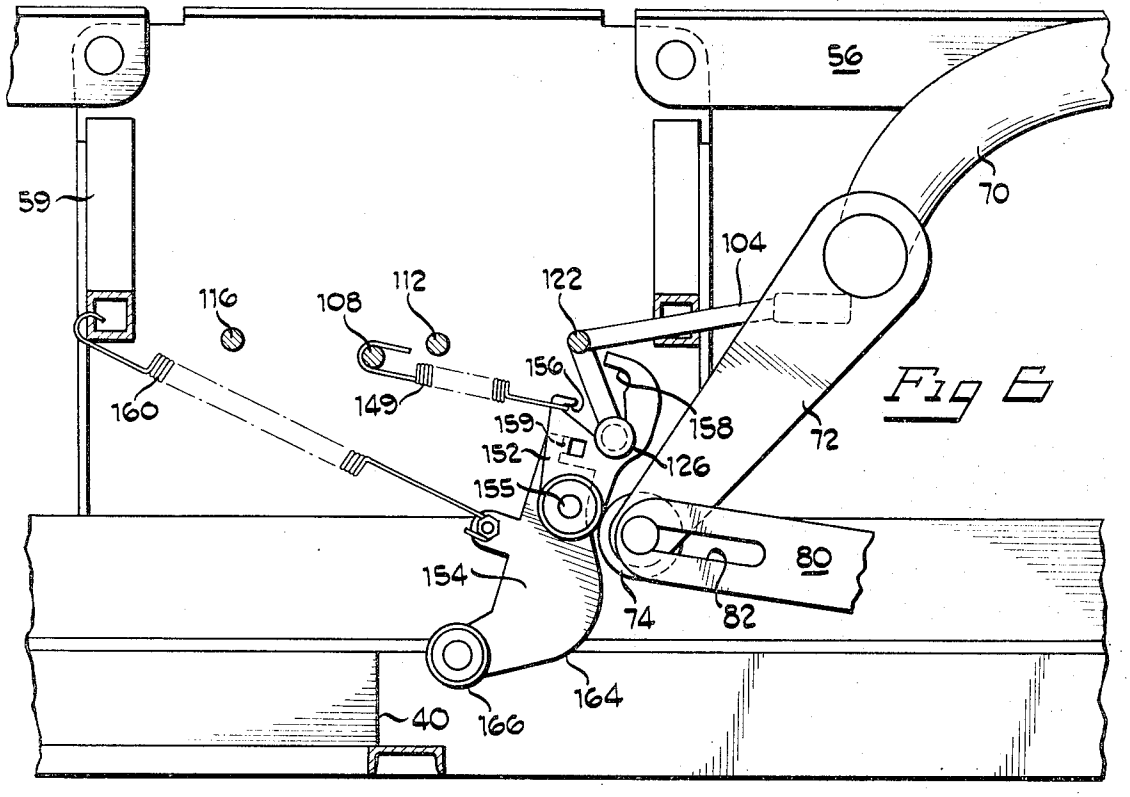
56
59
70
104
116
112
108
122
156
160
149
158
159
72
152
126
155
80
154
74
82
164
40
166

Fig 6

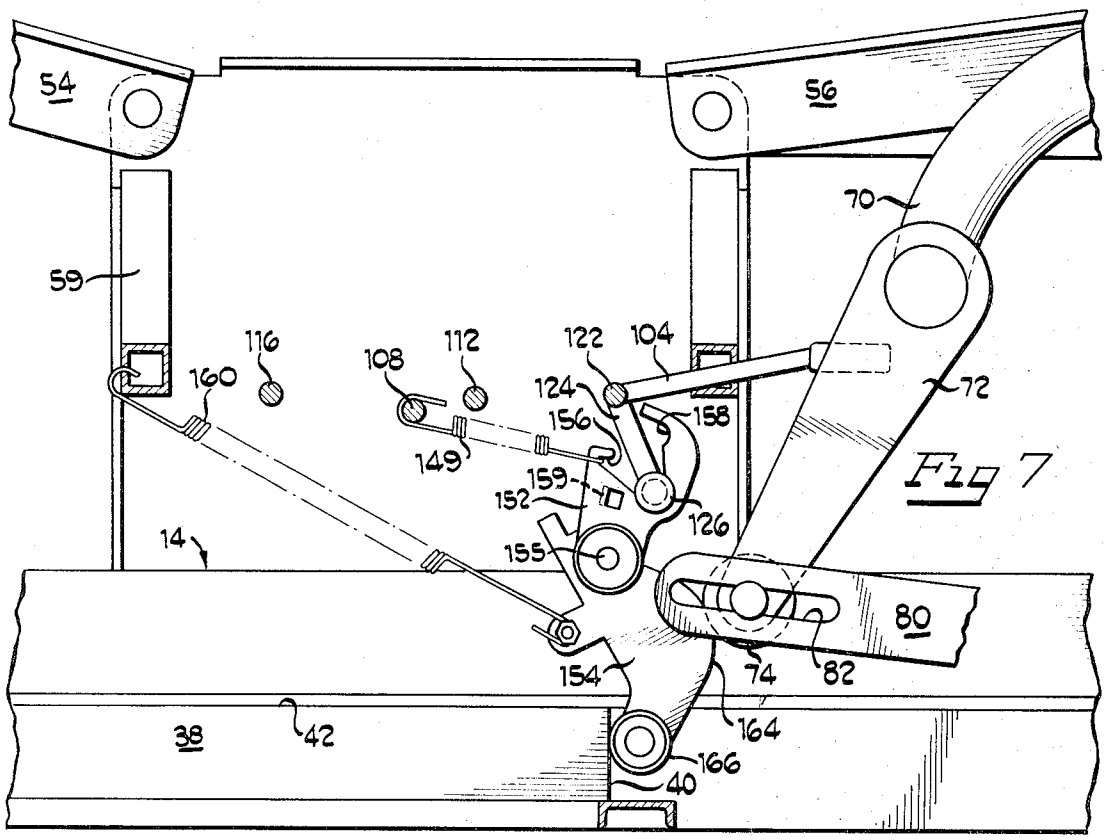
54
56
70
59
116
160
108
112
122
104
124
156
158
149
159
152
126
72
14
155
80
154
74
82
38
42
164
166
40

Fig 7

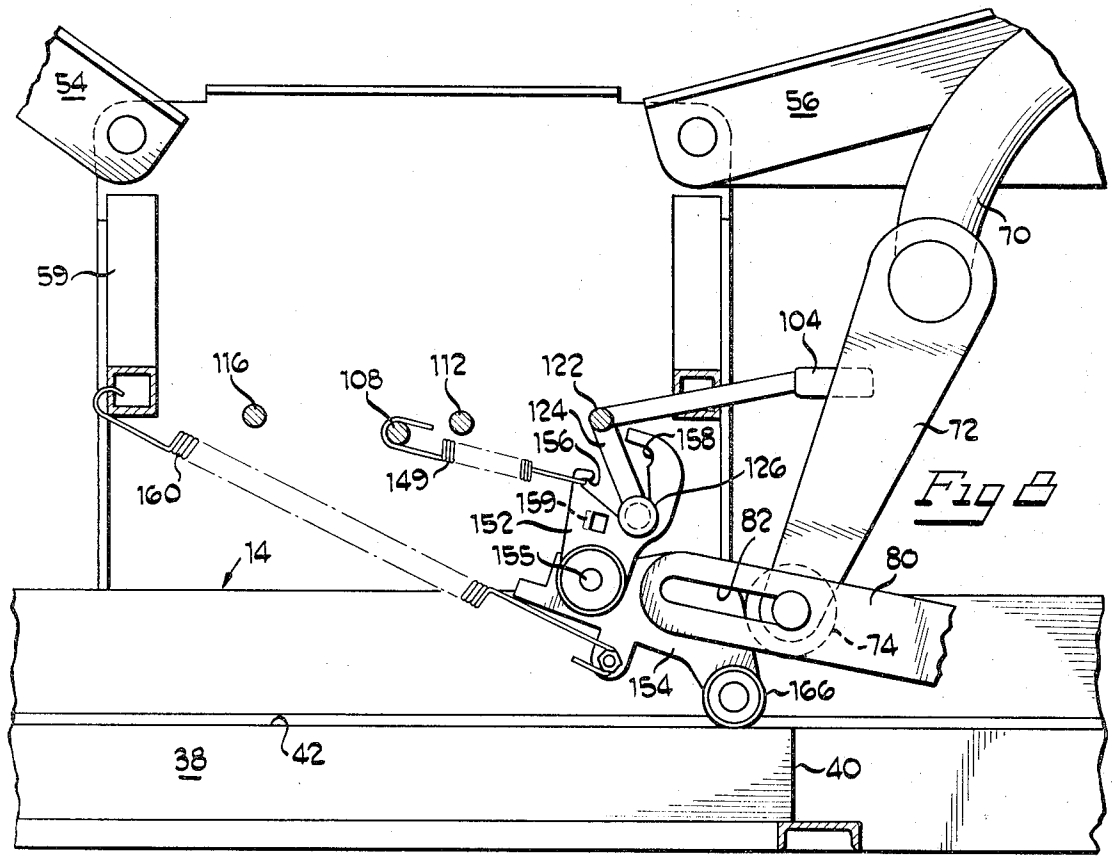
54
56
70
59
104
116
108
112
122
124
156
158
126
160
149
159
152
72
82
14
155
80
74
154
166
38
42
40

Fig 8

Fig 9

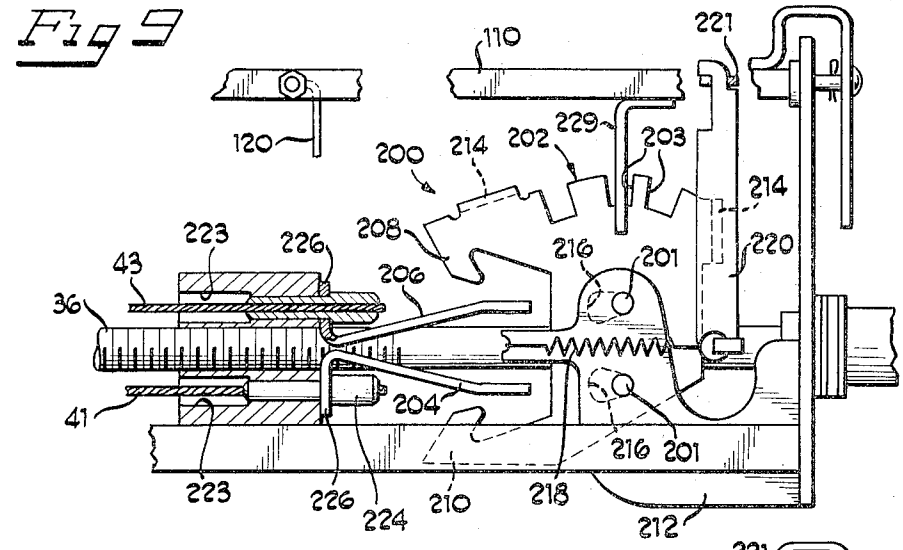

Fig 10

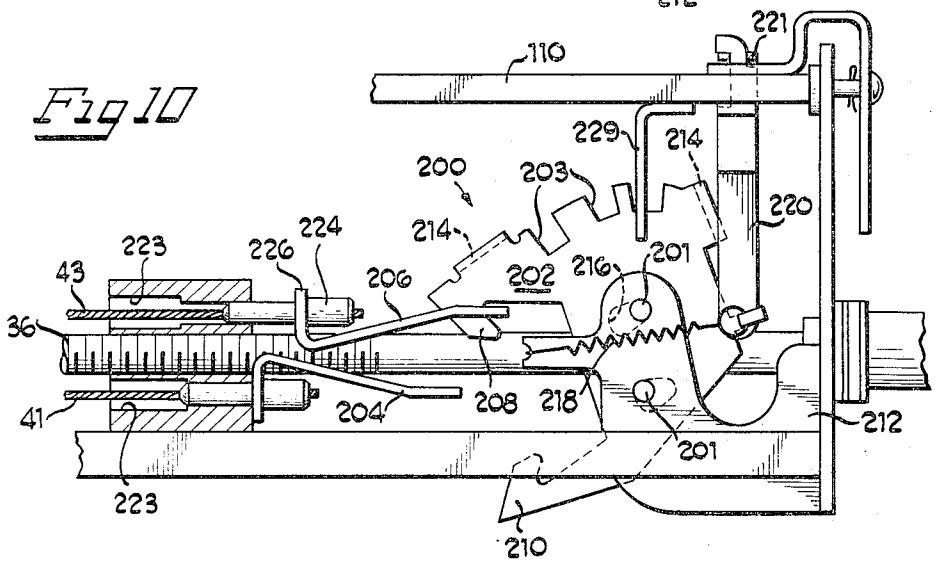

Fig 11

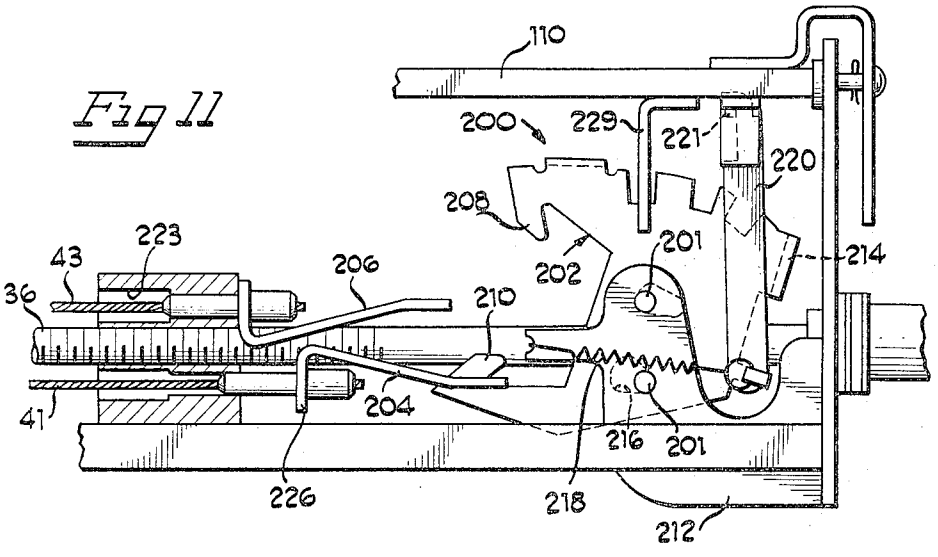

ELECTRICALLY OPERABLE HOSPITAL BED

BACKGROUND OF THE INVENTION

This invention relates generally to an electrically operable hospital bed. More particularly, it relates to an electrically operable hospital bed having improved knee contour and Trendelenburg positioning mechanisms.

The present invention is an improved form of electrically operable hospital bed of the type generally shown and described in U.S. Pat. No. 3,237,212, issued March 1, 1966, entitled "Retractable Bed;" U.S. Pat. No. 3,198,891, issued Aug. 3, 1965, entitled "Mechanism for Controlling the Power Unit of an Electric Hospital Bed;" U.S. Pat. No. 3,492,679, issued Feb. 3, 1970, entitled "Trendelenburg Control Mechanism," and U.S. Pat. No. 3,633,225, issued Jan. 11, 1972, entitled "Double Insulated Electric Hospital Bed." The disclosure contained in each of the above-mentioned patents is specifically incorporated by reference to this application.

The bed shown and described in the aforementioned U.S. Pat. No. 3,237,212 represents an important advance in hospital room patient care facilities. The bed includes mechanism for raising the head end of the mattress frame from the horizontal to a plurality of elevated body supporting positions. As the head section is elevated, the entire mattress supporting frame simultaneously moves toward the head end of the bed. In this way, the patient remains in a fixed relationship to auxiliary patient care facilities located adjacent the bed such as the bedside cabinet.

The bed disclosed in U.S. Pat. No. 3,237,212 further includes means for selectively providing automatic elevation of the knee section of the mattress frame as the head section is elevated. In this way, the patient is supported from longitudinal movement toward the foot end of the bed as the head end is elevated. The bed also includes high-low mechanism to vary the position of the mattress frame above the floor. This provides improved versatility in patient ingress and egress and allows for compatibility of the bed height with patient carrying stretchers and other hospital equipment.

The control mechanism illustrated in U.S. Pat. No. 3,198,891 provides the means for actuation of the electrically operable mechanisms of the bed. A reversible electric motor is selectively engageable with one or the other of a pair of screw type actuators supported upon the lower or stationary frame of the bed. One of the actuators is connected to the high-low mechanism to position the bed height with respect to the floor. The other operates appropriate mechanism to raise and lower the head section of the mattress frame.

The Trendelenburg control mechanism disclosed in U.S. Pat. No. 3,492,679 is an improved mechanism for lowering the head end of the mattress frame below the horizontal to provide a modified Trendelenburg position.

U.S. Pat. No. 3,633,225 relates to an improved arrangement for supporting the electrical equipment of the bed upon the bed frame. The invention of this patent provides significant advantages in relation to patient safety. The entire electrical system of the bed is isolated from the bed itself providing a double barrier against dangerous electrical breakdown.

The present invention comprises a further improvement in an electrically operable hospital bed of the type disclosed in the aforementioned patents. It includes improved mechanism for effecting knee lift of the mattress frame as the head end is elevated and it includes improved means for effecting Trendelenburg and reverse Trendelenburg positioning of the mattress frame. These improved mechanisms included improved actuator controls and allow improved control location immediately adjacent the bed operation control levers. These features simplify bed operation to the advantage of the hospital staff. The result is improved patient care services and patient comfort.

SUMMARY OF THE INVENTION

The principal object of the present invention is to provide an improved form of electrically operable hospital bed. The improvements contemplated by the present invention include improved knee-break and Trendelenburg positioning mechanism.

The mechanism for automatic raising of the thigh section of the mattress supporting frame upon elevation of the bed section includes a selectively activated camming means which imparts lifting forces to a lifting arm as the mattress frame moves toward the head end of the bed during head elevation.

The improved means for selective positioning of the bed in the Trendelenburg and reverse Trendelenburg positions operates in cooperation with the high-low mechanism which raises and lowers the entire bed upon telescoping legs. A latch is provided to engage lift cables associated with either leg at the head end or foot end of the bed. The latch is operable only when the bed is in the fully elevated position. Operation of the drive screw to lower the bed causes only the unlatched cables to be effective in lowering the bed, thus providing the desired Trendelenburg or reverse Trendelenburg position.

The operating controls of the bed of the present invention are greatly simplified as a result of incorporation of these new mechanisms in the bed design. Operating handles to provide Trendelenburg positioning or knee-break contour are positioned immediately adjacent the side mounted control handles which operate the normal bed functions.

DESCRIPTION OF THE DRAWINGS

FIG. **1** is a perspective view of an electrically operable hospital bed incorporating the features of the present invention.

FIG. **2** is a partially broken away top view of the electrically operable hospital bed of FIG. **1.**

FIG. **3** is a side elevational view, partially in section, of the electrically operable hospital bed of FIG. **1.**

FIG. **4** is a sectional view of the electrically operable hospital bed of FIG. **1** taken generally along the line **4—4** of FIG. **2.**

FIGS. **5** through **8** are fragmentary sectional views of the electrically operable hospital bed of FIG. **1** taken generally along the line **5—5** of FIG. **2,** and illustrating the knee-break mechanism of the present invention in various positions of operation.

FIGS. **9** through **11** are fragmentary sectional views of a portion of the electrically operable hospital bed of FIG. **1** taken generally along the line **9—9** of FIG. **2,** illustrating the improved Trendelenburg mechanism of the present invention.

FIG. **12** is a sectional view on a slightly enlarged scale of a portion of the electrically operable hospital bed of

FIG. 1, illustrating the internal construction of the supporting legs at the head end of the bed.

FIG. 13 is a sectional view on a slightly enlarged scale of a portion of the electrically operable hospital bed of FIG. 1, illustrating the internal construction of the supporting legs at the foot end of the bed.

FIG. 14 is a schematic on a reduced scale illustrating portions of the high-low operating mechanism.

FIG. 15 is a perspective on a slightly enlarged scale of a portion of the electrically operable hospital bed illustrated in FIG. 1.

DETAILED DESCRIPTION

Referring now to the drawings, there is illustrated an electrically operable hospital bed generally designated 10 embodying the principles of the present invention.

The bed 10 includes a high-low or stationary frame 12, an intermediate or longitudinally movable frame 14 and an articulated mattress supporting frame 16 fixed to the intermediate frame.

The stationary frame 12 includes side rails 18 connected at their head and foot end by cross members 20. Each of the side rails 18 include a roller 21 rotatably supported internally of the rails and extending upwardly through an appropriate aperture. These rollers provide support for the movable frame 14. Brackets 15 secured to each side rail overlie the intermediate frame 14 in sliding cooperation. These brackets maintain the frames in alginment and prevent separation of the frames.

The cross members 20 are connected to vertical leg posts 22. These posts are hollow and telescopically support legs 24 which support the bed 10 upon the floor. Operation of the high-low mechanism causes the leg posts 22 to move with respect to the legs 24 to change the bed height with respect to the floor. The legs 24 at the head end of the bed shown in FIG. 12 include a single shaft which telescopes within the post 22. The legs at the foot end shown in FIG. 13 include two sections telescoped within each other. Low friction pads 23 are provided to guide the legs within the posts.

A power and control unit 26 of the type disclosed in aforementioned U.S. Pat. No. 3,198,981 is mounted upon the lower frame of the bed 10. It is supported in the manner disclosed in U.S. Pat. No. 3,633,225 to provide additional safety from electrical hazard.

The control unit includes a reversible electric motor 28, and a control mechanism 32. The unit is operatively associated with a pair of drive screws 34 and 36 rotatably supported upon the stationary frame 12. One of the drive screws 34 is operative to effect simultaneous elevation of the head portion of the mattress support frame 16 and retraction of the seat portion of the mattress support frame toward the head end of the bed.

The drive screw 36 is effective to alter the bed height with respect to the floor. The mechanism which accomplishes this movement is disclosed in the aforementioned U.S. Pat. No. 3,271,795. It includes horizontally supported pulleys 37 mounted upon the stationary frame 12 adjacent the head and foot end and vertically supported pulleys 39 associated with each leg post 22. Flexible cables 41 are connected to the operating nut of the drive screw 36. These cables extend about the pulleys 37 at the head end of the bed, and the pulleys 39 associated with the head end hollow posts and are connected to the top of the head end legs 24, as illustrated in FIG. 12. Flexible cables 43 extend about pulleys 37 at the head end of the bed and then along the entire length of the stationary frame 12 and around pulleys 37 and 39 at the foot end of frame 14. The ends of cables 43 are connected to the tops of legs 24 at the foot end as illustrated in FIG. 13. This cable arrangement is illustrated schematically in FIG. 14.

Operation of drive screw 36 in one direction of rotation causes the operating nut to move toward the head end of the bed. This causes the effective cable length to increase and lower the bed with respect to the legs 24. Operation in the opposite direction causes the nut to move toward the foot end of the bed and decrease the effective cable length. This causes the stationary frame 12 to elevate upon the legs 24.

As best seen in FIGS. 2 and 5 through 8, the lower frame 12 additionally includes a channel 38 extending longitudinally of the bed from approximately the midpoint of the lower frame toward the head end. This channel includes closed end 40 at the lower end opposite the head end of the bed. The channel further defines a planar upper surface 42. This latter surface and the closed end 40 comprise actuator surfaces which coact with the knee-break mechanism of the present invention, as will be explained in further detail.

The intermediate or longitudinally movable frame 14 includes longitudinal side rails 44 connected by transverse channels 46 at the head and foot end. The side rails each included roller 48 rotatably mounted within the side rail and extending through appropriate apertures in the bottom of the rail. These rollers are in rolling supporting contact with the upper surfaces of the side rails 18 of the stationary frame to allow relative longitudinal movement. Brackets 50 secured to the side rails 44 extend downwardly in overlying relation to the inner and bottom surface of the side rails 18. These brackets include low friction pads in sliding contact with the side rails 18 of the stationary frame 12 to guide the moveable frame and prevent transverse movement or separation of the frames.

The mattress supporting frame 16 includes a seat portion 52, a head section 54, a thigh section 56, and a leg or foot section 58.

The seat portion is secured to the intermediate or movable frame for movement longitudinally of the bed by a pair of structural webs 59. The webs extend transversely outwardly of the frames 12 and 14 and terminate a pair of control panels 60 disposed on opposite sides of the bed.

The operator controls of the bed 10 are best illustrated in FIGS. 1, 2 and 3. The controls are accessible on either side of the bed 10 at the control panels 60 of the seat section 52.

Two controls, the head elevation and high-low controls designated 100 and 102, are disposed for patient use. Two others, the automatic knee-break selector 104 and the Trendelenburg position selector 106, are disposed immediately adjacent the patient control, but are disposed out of normal patient reach. Thus, all control functions may be performed at convenient bedside location, yet patient safety is assured through strategic positioning of certain of the levers out of normal patient reach.

The high-low control 102 takes the form of a knob exposed at each of the panels 60. The knobs are connected to a transverse actuator shaft 108 pivotally supported upon the movable frame 14. The shaft 108 is in

turn connected through a bell crank and linkage to a longitudinal actuator shaft **110** pivotally supported upon the stationary frame **12.** Shaft **110** is of square, cross-section, and the bell crank and linkage arrangement is slidably supported upon the shaft. This is necessary to accomplish transfer of motion through the bell crank and accommodate relative movement between the transverse shaft **108** and longitudinal shaft **110** during relative movement between the stationary and movable frames **12** and **14.**

The square shaft **110,** best seen in FIG. **15,** is connected to the control mechanism through another linkage which actuates the reversing switches and clutch associated with the high-low drive screw **36.**

The head elevation control **100** is a wing pivotally supported at its center. It is pivotal downwardly in one direction to elevate the head end and downwardly in the opposite direction to lower the head end. The control is biased to a central neutral position. This arrangement provides a simplified procedure for bed operation and has been found to be readily understood and easily utilized by the patient and hospital staff.

The head elevation wings **102** are operatively connected to a transverse actuator shaft **112** pivotally supported upon the movable frame **14.** This shaft is connected through a bell crank and linkage to a longitudinal actuator shaft **114** pivotally supported upon the stationary frame **12.** As in the high-low control, the longitudinal shaft **114** is of square, cross-section and the bell crank is slidable upon the shaft to accommodate relative movement between frames **12** and **14.**

A bell crank and linkage are connected between the square actuator shaft **114** and the control unit **32** to operate the reversing switches and clutch associated with drive screw **34.**

A Trendelenburg selector lever **106** extends downwardly of the web **59** of the seat section **52** at each side of the bed adjacent the control panel **60.** The levers are an integral part of a transverse actuator shaft **116** pivotally supported upon frame **14.**

The levers **106** are recessed from the outer edge of the bed to avoid accidental actuation or normal use by the patient.

The lever may be moved between a control neutral position which provides normal bed operation or a Trendelenburg and reverse Trendelenburg position to provide selected inclination of the entire bed toward the head end or foot end of the bed.

The transverse actuator shaft **116** is connected to a longitudinal actuator shaft **118** pivotally supported on frame **12** through a bell crank and linkage which is slidable upon shaft **118.** As in the case of the high-low and head elevation mechanism, this slidable connection is necessary to accommodate relative movement between the movable and stationary frames. The shaft **118** is in turn connected to the Trendelenburg mechanism through an operating linkage **120** shown in FIGS. **9** through **11.**

The automatic knee-break selector **104** comprises a lever extending outwardly of the webs **59** of the seat section **52** at each side of the bed. These levers are disposed at the side of the seat section **52** facing the foot end of the bed, and are recessed from the outer edge of the bed for patient safety. The levers **104** are movable between a position in which the knee-break mechanism is activated for operation and a position in which the knee-break mechanism is deactivated and no knee-break occurs.

The levers **104** are an extension of transverse shaft **122** pivotally supported upon the movable frame **14.** As best seen in FIGS. **5** through **8,** the transverse shaft **122** is provided with a lever arm **124** extending generally perpendicularly of the shaft. The lever arm includes a roller **126** rotatably supported at its free end which is operatively associated with the knee-break mechanism of the present invention.

Referring again to the mattress support frame **16,** head section **54** is pivotally attached to the seat portion **52** at the control panels **60.** The head portion includes a transverse bar **62** which supports the head section in a horizontal position upon the intermediate frame **14.** A modified Trendelenburg positioning mechanism **63** provided upon the intermediate frame coacts with the bar **62.** It allows movement of the head section **54** below the horizontal when desired. This mechanism is described in aforementioned U.S. Pat. No. 3,492,679.

The head section **54** further includes a transverse elevation tube **64** extending downwardly of the section **54.** It includes a depending crank arm **66.** The crank arm **66** is pivotally connected to the nut of the screw actuator **34.** Movement of the nut longitudinally of the bed effects pivotal movement of the head section **54** between the horizontal and inclined body supporting positions.

Links **68** are pivotally connected to the bed section **54** and to the side rail **44** of the intermediate frame **14.** Elevation of the head section **54** causes the link to pivot about the connection and draw the intermediate frame longitudinally of the stationaty frame **12** toward the head end of the bed. The patient experiences a constant positioning with respect to auxiliary equipment located adjacent the bed, regardless of the degree of head section elevation. Similarly, as the screw **34** is operated to lower the head section toward horizontal, the links **68** cause the entire intermediate frame and mattress frame to move longitudinally toward the foot end of the bed.

The thigh section **56** is pivotally connected to the seat section webs at the control panel **60.** It includes a transverse elevation tube **70** which extends downwardly toward the movable frame **14.** A depending crank arm **72** is secured to the tube **70.** The lowermost end of the crank arm **72** is provided with a roller **74** which forms a portion of the knee-break mechanism of the present invention, as will be explained in further detail shortly.

The crank arm **72** and transverse elevation tube **70** comprise a lever for elevation of the thigh section of the mattress frame **14.** When desired, elevation of the thigh section is accomplished automatically during elevation of the head section **54** by the knee-break mechanism of the present invention, as will be explained.

The thigh section may also be elevated normally regardless of the position of the head section when such positioning is necessary for patient comfort or treatment. This is accomplished through the manual crank **76** provided at the foot end of the bed. The crank **76** is connected to a screw type actuator **78** supported upon the movable frame **14.**

The operating nut of the actuator **78** is operatively connected to the crank arm **72** by pivotally connected link **80** shown in FIGS. **2** and **5** through **7.** As the oper-

ating nut is drawn toward the foot end of the bed by rotation of the manual crank **76,** the links **80** pull upon the crank arm **72** causing pivotal movement of the thigh section about its connection to the seat portion **52.** The links **80** include lost motion slots **82** at the connection to the crank arm **72** to allow operation of the thigh section by the actuator knee-break mechanism without interference by the manual crank **76.**

The foot or leg section **58** is pivotally connected to the thigh section **56** as at **84.** The free end of the foot section **58** adjacent the foot end of the bed is supported upon two depending links **86** pivotally connected to the foot section. The links **86** include free ends provided with a plurality of notches **88.** These notches are adapted for engagement with brackets **90** provided upon the intermediate frame **14.**

The elevation of the foot section of the frame **16** may be varied manually by positioning different notches in engagement with the brackets **90.** In addition, as the thigh section **56** of the mattress frame is elevated, the links **86** pivot upon the brackets **90** to effect elevation of the foot position. To further elevate the foot section, the links are moved to engage notches nearer the free ends of the links with the brackets. To lower the foot section, the notches **88** furthest from the free ends of the links are engaged with the brackets **90.**

Support bars **91** extending transversely of the thigh section **56** and foot section **58** normally support these sections in the horizontal body supporting position. These bars normally rest upon a cover member (not shown) which overlies the power and control unit **26.**

In accordance with the present invention, the bed **10** includes an automatic knee-break mechanism generally designated **150,** best seen in FIGS. **5** through **8.** The mechanism may be activated to provide automatic elevation of thigh section **56** as the head section **54** is inclined, or it may be deactivated to exclude the function. Selection is made through positioning of the selector **104.** When the selector is in the position illustrated in FIG. **5,** no thigh elevation takes place. When positioned as in FIGS. **6** through **8,** the mechanism is activated to accomplish knee-lift.

The automatic knee-break mechanism includes two plates pivotally supported upon the movable frame **14.** These plates comprise an operator plate **152** and a cam plate **154** pivotally connected to the frame **14** upon a common shaft **155.**

The operator plate **152** is biased toward the head end of the bed by spring **149** connected between the plate and shaft **108.** The plate defines a notch **156** which receives the roller **126** mounted on the lever arm **124.** The spring bias maintains operative contact between the roller **124** and notch **156.**

The notch **156** defines an activated position **157** and a deactivated position **158.** Movement of the roller **126** between these two positions by movement of lever **104** changes the angular position of the operator plate as illustrated in the drawings. the plate **152** further includes a tab **159** which extens transversely outwardly of the plate in spaced relation to the shaft **155.** The position of this tab controls operation of the cam plate **154** as will be explained.

The cam plate **154** is spring biased toward the head end of the bed by spring **160** extending between the plate **154** and web **59.** The plate defines a stop **162** adapted to engage tab **159** of operator plate **152** to prevent rotation of the plate **154** about the common shaft **155.** It further defines a cam surface **164** adapted for coaction with roller **74** mounted on crank arm **72** of the thigh section **56** to accomplish thigh section elevation.

The cam plate **154** is provided with a roller **166** adapted for coaction with channel **38** mounted on stationary frame **12** to render cam surface **164** effective to elevate the thigh section **56** when lever **104** is in the activated position. In FIG. **5,** the automatic knee-break mechanism **150** is illustrated in the deactivated position. That is, inclination of the head section **54** of the mattress supporting frame **16** and retraction of the seat section **52** toward the head end of the bed will produce no automatic knee elevation. As explained, however, knee elevation may be provided manually through operation of crank **76.**

In the position illustrated in FIG. **5,** selector lever **104** is positioned such that roller **126** on arm **124** is disposed in the deactivated position **158** of notch **156.** In this position, the plate **152** is urged against the bias of spring **149** to a position where tab **159** is rotated to a predetermined inclined angle toward the foot end of the bed.

Biasing spring **160** causes the cam plate **154** to rotate about shaft **155** until stop **162** engages tab **159.** Tab **159,** therefore, determines the positioning of cam plate **154** when the plate is under control of biasing spring **160.**

In the position described, the cam plate is urged to a position against tab **159** where roller **166** is disposed above channel **38.** As the head section **52** of the mattress support frame **16** is elevated, the knee-break mechanism **150** passes over the channel **38** due to relative movement between frame **12** and **14.** No contact is made between roller **166** and channel **38** and no knee elevation occurs.

To provide automatic knee-break or thigh elevation, selector lever **104** is moved to the position illustrated in FIGS. **6** through **8.** During this movement, biasing spring **149** allows the actuator plate **152** to rotate about shaft **155** while allowing notch **156** and roller **126** to remain in operative contact. This movement continues until roller **126** becomes disposed in the activated position **158** of the notch **156.** The resultant angular change of position places tab **159** in a nearly vertical position.

Rotational movement of the operator plate **152** is transferred to the cam plate through the contact between tab **159** and stop **162.** This movement rotates the cam plate **154** against the bias of spring **160** to a position where the roller **166** becomes disposed below the surface **42** of channel **40.**

Elevation of head section **54** of the mattress support frame **16** causes movement of the intermediate frame **14** toward the head end of the bed. This movement causes engagement of roller **166** with closed end **40** of channel **38** mounted on the stationary frame **12** as best seen in FIG. **6.**

As the elevation of head section **54** continues, frame **14** continues to move toward the head end of the bed. The coaction between roller **166** and closed end causes cam plate **154** to rotate against the bias of the spring **160.** This movement, in turn, causes stop **162** to separate from tab **159** and causes cam surface **164** to move into contact with roller **74** mounted on crank arm **72.** Continued operation of the head elevation mechanism

causes further camming of cam plate **154** in a direction toward roller **74.** As shown in FIG. **7,** the coaction between cam surface **164** and roller **74** applies a lifting force to crank arm **72** and causes thigh section **56** to pivot about its connection to the seat section.

This lifting movement continues as the frame **14** moves toward the head end of the bed and continued rotation of cam plate **154** occurs.

When the bed mechanism has reached the position illustrated in FIG. **8,** maximum thigh elevation is provided. Roller **166** is in engagement with the upper surface **42** of channel **38.** The cam plate **154** has been pivoted about the shaft **155** to a maximum separation between stop **162** and tab **159.** Thigh section **56** is now elevated to the maximum position.

Further elevation of the head end of the bed and consequent relative movement of the frame **14** with respect to stationary frame **12,** does not change the angular position of cam plate **154.** This is true since roller **166** is progressing along the horizontal surface **42.** Thus, the position of cam surface **164** remains constant and no further elevation of the thigh section **56** occurs.

It has been determined that a desirable maximum thigh section elevation provided by the automatic knee-lift mechanism is 15° from horizontal. The camming surfaces are sized and positioned such that this maximum is achieved when the head section has reached an elevation of 35°. Thereafter, as the head section is elevated to its maximum position, no further thigh section elevation occurs. These positions are not critical to the present invention and are only considered as desirable for patient comfort.

Should further thigh section elevation be required, the crank arm **72** may be operated through links **80** by the manual crank **76.** Depending upon the position of the drive screw operating nut, operation of the crank **76** will first take up any lost motion provided by slots **82.** Thereafter, the links **80** will pull the crank **72** in a direction to separate roller **74** from cam surface **164** and further elevate the thigh section.

One important feature of the automatic knee-break mechanism **150** of the present invention is that the selector lever **104** may be moved between the activated and deactivated position at any time. When the head section **54** is horizontal, as in FIG. **5,** the roller **166** is spaced from channel **38.** Therefore, movement of the lever **104** to the activated position rotates the cam plate **154** to the operative position.

When in the operative position and the head section **54** is elevated even slightly, the position of the cam plate **154** is determined by the contact between the roller **166** and the surface **40** or **42.** Tab **159** and stop **162** are not in contact. Movement of the lever **104** to the deactivated position merely rotates tab **159** in a direction to increase the space between the tabs and stop **162** without disturbing the position of cam plate **152.** Upon movement of the head section **54** to the horizontal position, the cam plate will be urged into contact with the tab **159** by the biasing spring **160.** The cam plate will, therefore, assume the deactivated position illustrated in FIG. **5.** Upon subsequent elevation of the head section **54,** the thigh section **56** will remain in the horizontal position.

Another important feature of the bed of the present invention is the Trendelenburg and reverse Trendelenburg positioning mechanism. The mechanism generally designated **200** operates in cooperation with the high-low mechanisms which provides for adjustment of bed height.

The mechanism **200** is selectively operable, utilizing selector lever **106.** It is effective to provide inclination of the entire bed **10,** including stationary frame **12,** movable frame **14** and mattress supporting frame **16** in either a head end down (Trendelenburg) or a foot end down (reverse Trendelenburg) position.

The Trendelenburg mechanism **200,** best seen in FIGS. **3** and **9** through **11,** includes a Trendelenburg hook member **202** pivotally supported upon the stationary frame **12** and a pair of hook receptacles **204** and **206** associated, respectively, with the head end leg cables **41** and foot end leg cables **43.**

The hook member **202** is supported upon the stationary frame **12** in surrounding relation to drive screw **36** of the high-low operating mechanism by a bracket **212.** The bracket is generally U shaped with one leg of the "U" disposed on either side of the drive screw. Two horizontal cross pins **201** are connected between the legs of the U-shaped bracket **212** in general vertical alignment, one above drive screw **36** and one below.

Similarly, and as best seen in FIG. **2,** the hook member **202** is also formed of a channel or U-shaped member. The hook member is disposed with one leg of the "U" located on either side of drive screw **36.** Each leg of the hook member is provided with a pair of elongated slots **216** which receive cross pins **201.** This provides for pivotal support of the member **201** on the bracket **212.** The separate legs of the hook member are joined by two cross webs **214,** one at the top of the member and one at one end, above drive screw **36.** Three notches **203** are provided across the top of the member for purposes as will be explained.

Each leg of the hook member **202** defines a Trendelenburg claw **208** and a reverse Trendelenburg claw **210.** Thus, two claws are defined for each position, one on either side of drive screw **36.** The Trendelenburg hook member **202** is spring biased by a apir of springs **218,** one on each side of bracket **212.** It is pivotal between three positions of operation, neutral, as illustrated in FIG. **9,** Trendelenburg, as illustrated in FIG. **10,** and reverse Trendelenburg, as illustrated in FIG. **11.** The spring bias assists to maintain the hook in position.

Positioning of the Trendelenburg hook member is accomplished through the selector lever **106.** Movement of the lever **106** is transferred through transverse shaft **116** and longitudinal shaft **118** and operating linkage **120.**

This linkage includes a generally vertical link **220** and a generally horizontal lever arm **221** shown in cross-section in FIGS. **9** through **11.** The lever arm **221** is fixed to longitudinal shaft **118.** It is shaped to pass beneath longitudinal shaft **110** associated with the high-low actuating mechanism and connects to vertical link **220** at its upper end.

Movement of selector lever **106** in one direction causes pivotal movement of shaft **118** in a direction to create an upward pull on link **220** through lever arm **221.** This pivots hook member **202** downwardly. Movement of selector lever **106** in the opposite direction causes pivotal movement of longitudinal shaft **118** in the opposite direction. This causes lever arm **221** to push downwardly upon link **220** and pivots member **202** upwardly.

The cables **41** and **43** associated with telescoping legs **24** are connected to the operating nut of drive screw **36.** As can be appreciated, the position of the operating nut along the drive screw determines the bed height. That is, as the nut is moved toward the foot end of the bed, the effective length of the cables is reduced, causing the bed to elevate upon legs **24.** When the nut reaches the end of the drive screw nearest the foot end of the bed, the legs **24** are fully extended and the bed is at maximum height. As the nut is moved toward the head end of the bed, the effective length of cables **41** and **43** is increased. The weight of the bed causes it to move downwardly upon the legs **24** to accommodate the increased cable lengths.

The cable pairs **41** and **43** are connected to the operating nut of the drive screw **36** in a manner such that the nut may move with respect to the cables during Trendelenburg positioning. The cable pairs pass through apertures **223** formed in the nut and are connected to the hook receptacles **204** and **206** by fastener **224.** Each fastener includes a guide pin portion that is adapted to be slidingly received in the associated aperture.

Each hook receptacle **204** and **206** includes a generally vertical plate portion **226** which is adapted for abutting engagement with the nut. This abutting engagement prevents the cables to withdraw from the nut and comprises the connection between the cables and the nut.

The hooks **204** and **206** further include generally horizontal receptacle defining portions **227** which extend toward the foot end of the bed. Each defines an aperture, as best seen in FIG. **2,** adapted to receive the associated claws **210** and **212** of the hook member **202.**

When the bed is at the maximum height above the floor, the hook receptacles **204** and **206** are positioned between the claws **208** and **210** of the member **202.** Movement of the selector lever **106** to either the Trendelenburg or reverse Trendelenburg selector position will cause the member **202** to be pivoted in the appropriate direction and one or the other of the pairs of claws **208** or **210** will be disposed within the receptacle defining aperture of the associated receptacle **204** or **206.** Thereafter, upon operation of the high-low mechanism **100** to lower the bed upon legs **24** and movement of the drive screw operating nut toward the head end of the bed and interengaged claw and receptacles will prevent one of the pairs of cables **41** or **43** to extend. That pair of cables will remain stationary and the height of the bed at the affected end of the bed will remain maximum. The other, unlatched receptacle, will follow the drive screw nut and that pair of cables will operate to lower the opposite end of the bed.

To provide Trendelenburg positioning, the selector lever **106** is positioned to move claw **208** into engagement with receptacle **206** as illustrated in FIG. **10.** This prevents extension of cable **43** associated with foot end legs **24.** Operation of the high-low mechanism is effective only with respect to cables **41** and only the head end of the bed will lower on the telescoping legs.

To provide reverse Trendelenburg positioning, the selector lever is moved to position member **202** as illustrated in FIG. **11** with claw **210** in engagement with receptacle **204.** Upon actuation of the high-low mechanism, only cables **43** will be extended, lowering the foot end of the bed.

For patient safety, the claws **208** and **210** are sized and shaped such that only a positive engagement of the receptacles can be achieved upon operation of the Trendelenburg selector and only when the bed is at maximum elevated height. Also, since the one or the other ends of the bed are held in maximum up position upon the telescoping legs, the engagement between claw and receptacles carries approximately one-half the bed weight. The shape of the claws and the weight applied to the cables prevents operation of the selector lever **106** and accidental disengagement of the claw and receptacle, while the bed is in any position of Trendelenburg.

A further safety feature operation of the high-low mechanism except when the Trendelenburg selector is in either the neutral, Trendelenburg, or reverse Trendelenburg position. The longitudinal shaft **110** which is connedted to the high-low operating control **100** is provided with a depending web **229.** The web in sized and positioned such that when the shaft **110** is pivoted upon actuation of the control the web is moved into coaction with the member **202.** When the member **202** is in the neutral, Trendelenburg or reverse Trendelenburg positions, actuation of the high-low control will cause the web **229** to pass within one of the notches **203** formed in the hook member and operation is not impaired. However, if the hook member is positioned in any intermediate position, the web **229** will engage the leg of the member **202** and pivotal movement of the shaft **110** will be prevented, and the drive screw **36** will not be energized. This prevents operation of the high-low mechanism at any time other than when claws **208** and **210** and receptacles **204** and **206** are fully latched or unlatched.

As can be seen, an improved form of electrically operable hospital bed has been provided having improved knee contour and Trendelenburg positioning mechanisms. The bed also provides improved control locations resulting in improved patient care capabilities.

Various features of the present invention have been particularly shown and described. However, it should be understood that various modifications may be made without departing from the spirit and scope of the present invention.

What is claimed is:

1. In an electrically operable hospital bed having a stationary frame supporting said bed upon the floor, a relatively movable frame supported by said stationary frame and movable with respect thereto, an articulated mattress support frame secured to said movable frame for movement therewith including a thigh portion pivotal between a plurality of thigh supporting positions, the improvement comprising camming means operatively associated with said thigh section and secured to one of said stationary and movable frames and positionable to engage the other thereof, said camming means being responsive to the relative movement between said movable and stationary frames to effect positioning of said thigh section when in said position to engage said one of said stationary and movable frames.

2. The improvement as claimed in claim **1** wherein said thigh section includes a crank arm connected thereto adapted to receive lifting forces from said camming means and said camming means includes a cam plate pivotally supported upon said movable frame for movement into contact with said crank arm to effect

positioning of said thigh section, and means on said stationary frame operatively associated with said cam plate for moving said cam plate into operative association with said crank arm during movement of said movable frame.

3. The improvement as claimed in claim 2 wherein said stationary frame includes a generally horizontally disposed channel having a planar upper surface and closed end facing said camming means, and wherein said cam plate includes a roller adapted to contact said closed end and planar upper surface of said channel to pivot said cam plate into contact with said crank arm during movement of said movable frame.

4. The improvement as claimed in claim 1 wherein said bed includes control means carried by said movable frame to selectively activate and deactivate said camming means, said control means including an operator plate pivotally supported upon said movable frame in operative association with said cam plate and including a tab engageable by said cam plate, said operator plate being positionable to move said tab between a first and second position and biasing means urging said cam plate toward engagement with said tab, said cam plate being positioned by said operator plate when said operator plate is in said first position such that no engagement occurs between said roller and channel upon movement of said movable frame and said cam plate being positioned for engagement of said roller with said channel when said operator plate is in said second position.

5. The improvement as claimed in claim 4 wherein biasing means connected to said operator plate urge said plate toward said tab with said cam plate, and said control means include means for pivoting said operator plate between said first and second positions, said biasing means allows said pivotal movement regardless of the position of said cam plate.

6. In an electrically operable hospital bed having a frame, pairs of legs at the head end and foot end of said frame supporting said frame upon the floor, said legs being telescopable with respect to said frame to adjust the height of said frame above the floor, cable pairs carried by said frame connected respectively to said telescopable legs at the head end and foot end of said frame, the effective length of said calbes being adjustable to vary bed height, and electrically operable means connected to said cable pairs for varying said cable length, the improvement comprising Trendelenburg positioning means mounted on said frame in operative association with said cable pairs, said means being selectively operable to secure selected ones of said pairs of said cables to fix the effective length thereof and render said length varying means inoperative with respect thereto.

7. The improvement as claimed in claim 6 wherein said Trendelenburg positioning means includes a hook member mounted on said frame and movable between neutral, Trendelenburg and reverse Trendelenburg positions, said cable pairs each include a receptacle plate connected to their free ends for movement of said hook member into said Trendelenburg position causing engagement of said hook with said receptacle connected to the cable pairs connected to the legs at the foot end of the frame and movement of said hook into said reverse Trendelenburg position causes engagement of said hook with said receptacle connected to said cable pairs connected to said legs at said head end of said frame.

8. The improvement as claimed in claim 7 wherein said cable length varying means includes a screw type actuator having a drive nut movable longitudinally of the bed, said drive nut includes a plurality of apertures each slidably receiving one of said cables, said cables passing through said apertures and being connected to said receptacles, said receptacles adapted for abutting engagement with said nut, positioning of said mechanism in said neutral position allowing said receptacles to remain in said abutting contact during operation of said drive screw, positioning of said mechanism in said Trendelenburg position causing said cable pair connected to said foot end legs to remain fixed and said nut to move with respect to said cables, and positioning of said mechanism in said reverse Trendelenburg position causing said cable pair connected to said head end legs to remain fixed and said nut to move with respect thereto.

9. The improvement as claimed in claim 8 wherein said hook includes a plurality of notches and said electrically operable means includes actuator means including a shaft pivotally movable to effect actuation of said drive screw, said shaft including an outwardly extending web position for pivotal movement into said notches when said hook is in said neutral, Trendelenburg or reverse Trendelenburg position, said web engaging said hook to prevent pivotal movement of said shaft when said hook is in any intermediate position.

10. The improvement as claimed in claim 8 wherein said hook includes a plurality of notches, and said electrically operable means for operation of said drive screw includes a shaft pivotally movable to effect operation including a web extending therefrom.

11. A patient control actuator for an electrically operable hospital bed comprising, a member having a pivotal mounting upon a hospital bed, said member having a central hub coincident with said pivotal mounting and having a pair of divergent, outwardly directed actuator wings extending from said hub for receiving pivotal force to pivot said member about said pivotal mounting between a neutral position, a first operative position by pivoting in a first direction from said neutral position and a second operative position by pivoting in a second direction from said neutral position.

12. A patient control actuator as claimed in claim 11 wherein said member is biased to said neutral position.

13. In an electrically operable hospital bed as claimed in claim 1 wherein said hospital bed further includes a pair of legs at the head end and foot end of said frame supporting said bed upon the floor, said legs being telescopable with respect to said frame to adjust the height of said frame above the floor, cable pairs carried by said frame and connected respectively to said telescopable legs at the head end and foot end of said frame, the effective length of said cable pairs being adjustable to vary bed height and electrically operable means connected to said cable pairs for varying said cable length, the improvement comprising Trendelenburg positioning means mounted on said frame in operative association with said cable pairs, said means being selectively operable to secure selective ones of said pairs of said cables to fix the effective length thereof and render said length varying means inoperative with respect thereto.

* * * * *