W. L. McCUTCHEON.

SUBMARINE OPERATING APPARATUS.

APPLICATION FILED MAR. 23, 1917.

1,262,075.

Patented Apr. 9, 1918.

2 SHEETS—SHEET 1.

Fig. 1.

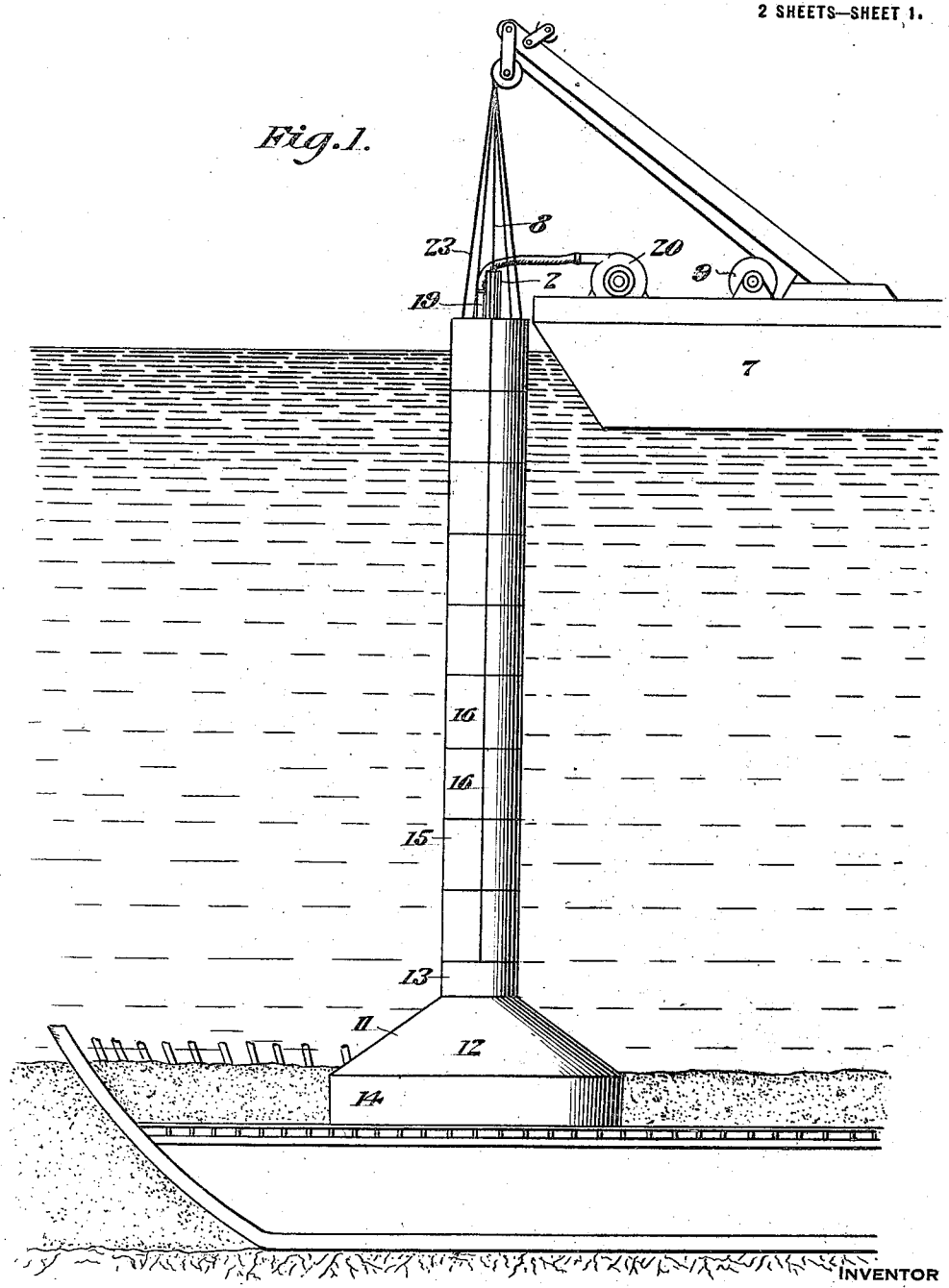

INVENTOR

William L. McCutcheon

WITNESSES

M. D. Shafer

Rodney M. Smith

BY Victor J. Evans

ATTORNEY

BACKETT & WILHELMS

W. L. McCUTCHEON.

SUBMARINE OPERATING APPARATUS.

APPLICATION FILED MAR. 23, 1917.

1,262,075.

Patented Apr. 9, 1918.

2 SHEETS—SHEET 2.

Fig. 2.

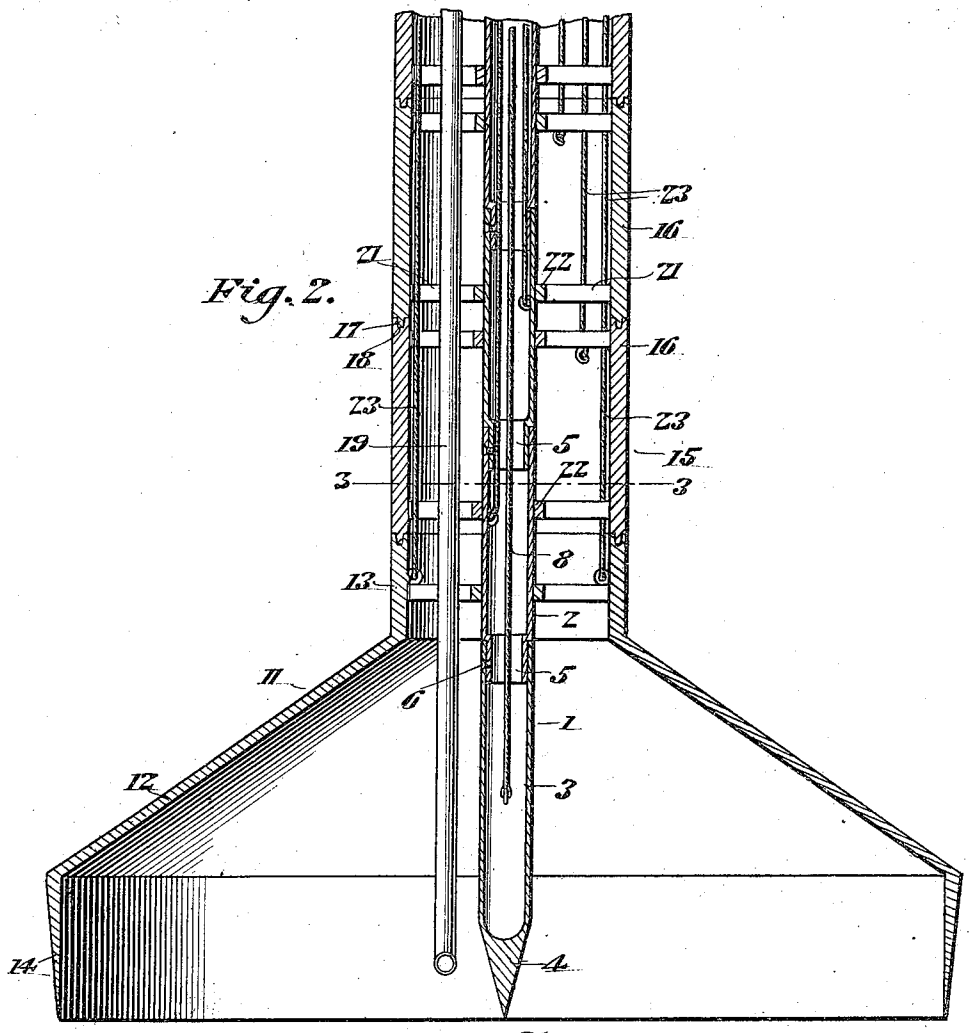

Fig. 3.

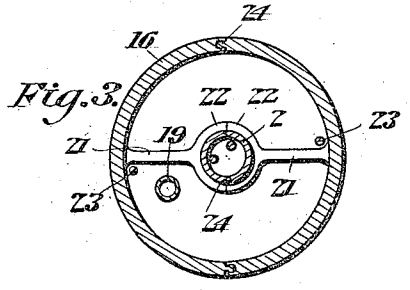

INVENTOR

William L. McCutcheon

BY Victor J. Evans

ATTORNEY

WITNESSES

W. D. Shipe

Rodney M. Smith

UNITED STATES PATENT OFFICE.

WILLIAM LEONARD McCUTCHEON, OF WILKES-BARRE, PENNSYLVANIA.

SUBMARINE OPERATING APPARATUS.

1,262,075. Specification of Letters Patent. Patented Apr. 9, 1918.

Application filed March 23, 1917. Serial No. 156,956.

To all whom it may concern:

Be it known that I, WILLIAM L. McCUTCHEON, a subject of the King of Great Britain, residing at Wilkes-Barre, in the county of Luzerne and State of Pennsylvania, have invented new and useful Improvements in Submarine Operating Apparatus, of which the following is a specification.

This invention comprehends improvements in submarine operating apparatus and has for its primary object the provision of a device permitting submarine operations at a great depth for the purpose of recovering valuables from sunken vessels and from the bed of the ocean.

Another object of the invention is to provide a submarine operating apparatus of the caisson type having a hood or working chamber connected with the surface of the water by a sectional tube, the working chamber and tube sections being guided in their descent by a central hollow sectional shaft.

Another object of the invention is to generally improve devices of this nature to render them more practical, useful and commercially desirable.

With these and other objects in view as will become more apparent as the description proceeds, the invention consists in certain novel features of construction, combination and arrangement of parts as will be hereinafter fully described, illustrated and claimed.

In the drawings,

Figure 1 is a side elevation showing the apparatus in operative position.

Fig. 2 is a longitudinal sectional view through the apparatus, and

Fig. 3 is a transverse sectional view on the plane of line 3—3 of Fig. 2.

Referring in detail to the drawings by numerals, 1 designates as an entirety a tubular shaft having hollow sections 2 and 3. The section 3 is closed at its lower end by the conical head 4 and is fitted at its upper end over the reduced portion 5 of the adjacent section 2. The sections 2 are each formed with a reduced portion 5 to fit telescopically into the next lower section. If desired, any suitable clamping means such as the bolts 6 may be used to secure the shaft sections together. The sections of the shaft are lowered from the boat 7 and each is connected to a cable 8 which winds around a windlass 9.

A funnel shaped hood generally designated 11 having a conical body 12, a neck 13 and a vertical tapered wall 14 provides a working chamber for the operators as they are recovering the sunken treasures. The neck or tube section 13 formed on the body of the hood is connected to a sectional tube 15 which extends upwardly to the surface and which is formed by a plurality of tube sections 16. Each section is formed with a tongue 17 on one end and a circumferential groove 18 on its other end and when the sections are properly joined with each other and connected to the hood they form a water tight inclosure from which water may be pumped through a pipe 19 connected to a suction pump 20 carried by the vessel 7.

To provide for a proper alining of the lowermost section 16 with the neck 13 and to provide for a proper alining of the various tube sections 16 with each other, I provide in each of these members a pair of arms 21 connected at their outer ends to the sections and having semi-circular heads 22 formed on their inner ends. The heads 22 coöperate to form rings equal in diameter to the external diameter of the central tubular shaft 2 and being slidably engaged on this shaft guide the tube sections 16 properly into place with each other so as to form a water tight inclosure. A pair of cables 23 is connected to each of the tube sections 16 and to the neck 13. These cables wind on the windlass 9 and are for the purpose of raising and lowering the hood 11 and tube sections 16 from and into operative position.

To permit assembling and disassembling of the apparatus each of the sections 2 and 16 is made in two longitudinal parts connected by tongue and groove joints 24 as shown.

The hood 11 may be made of sufficient size to entirely inclose a sunken vessel or may be of such size as to rest upon the deck thereof as shown in Fig. 1. After the various parts of the apparatus have been lowered into position, to cause the tapered wall 14 of the hood 11 to sink into the bed of the ocean or into sand on the deck of a vessel, water may be pumped from the interior of the hood and tube 16 by the pump 20. The hood may be made of such size as to entirely envelop a sunken vessel or may be made somewhat smaller to rest on the deck thereof as shown.

From the foregoing description taken in

connection with the accompanying drawings, it will be apparent that I have provided a very simple and practical submarine operating apparatus of the caisson type which will prove very useful in operating at a great depth to recover valuables from sunken vessels or from the bed of the ocean.

While I have shown and described the preferred embodiments of my invention, it will be clearly understood that I do not wish to be limited to this construction, but may make such changes as will fall within the scope and spirit of the invention as claimed.

What I claim is:—

1. In an apparatus of the character described, a sectional tubular shaft adapted to be lowered from a vessel, said shaft having its lower end pointed, a hood having a sliding connection with said shaft, and a sectional tube supporting said hood, each section of the tube having a sliding connection with the shaft.

2. In an apparatus of the character described, a tubular shaft formed in sections, the lower section thereof being closed at its lower end by a pointed head, means for raising and lowering said sections, a hood having a tapered vertical wall adapted to sink into the bed of an ocean, a deck on said hood, a sliding connection between said shaft and neck, a sectional tube connecting with the neck, each tube section having a sliding connection with the shaft and means for raising and lowering each tube section and said hood.

3. In an apparatus of the character described, a hollow sectional shaft, said shafts telescoping into each other, means for raising and lowering each of the shaft sections, a funnel shaped hood having a conical body portion, a tapered vertical wall depending from the lower edge of said body portion and a neck; a sectional tube, a pair of spiders in each of the tube sections having their hub portions of such size as to receive the central shaft whereby the sections are guided in their descent, arms formed in the neck of the hood and slidably engaging with the central shaft, means for raising and lowering the tube sections and the hood and means for pumping water from the interior of the hood and tube.

In testimony whereof I affix my signature.

WILLIAM LEONARD McCUTCHEON.

Copies of this patent may be obtained for five cents each, by addressing the "Commissioner of Patents, Washington, D. C."