E. A. KUEN.

ELECTRIC SWITCH.

APPLICATION FILED MAY 24, 1920.

1,417,925. Patented May 30, 1922.

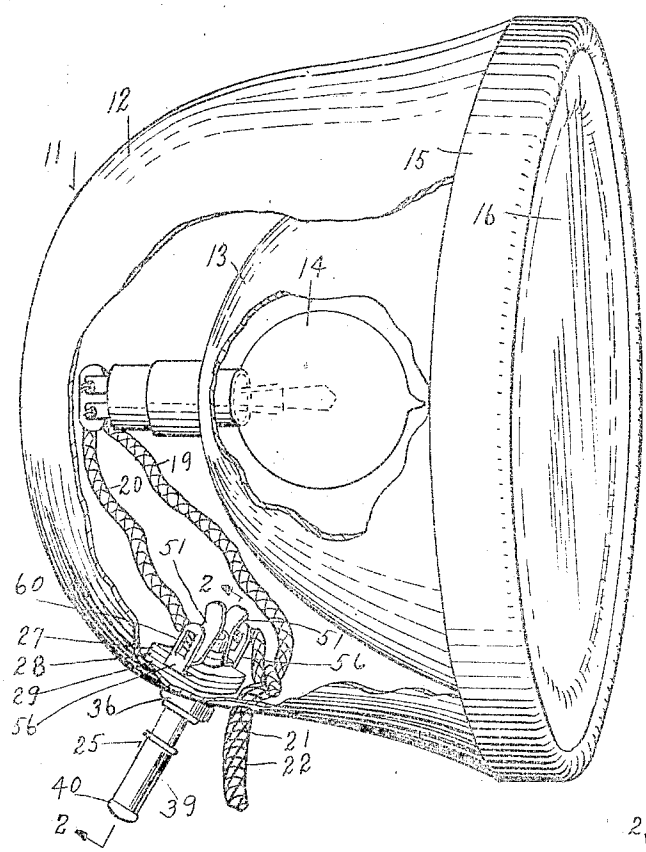

Fig. 1

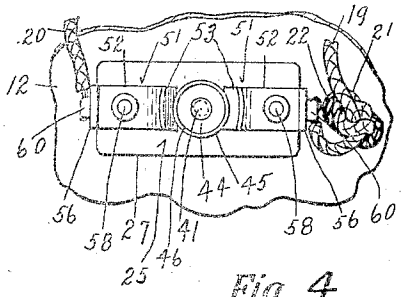

Fig. 4

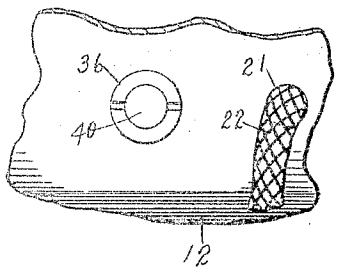

Fig. 5

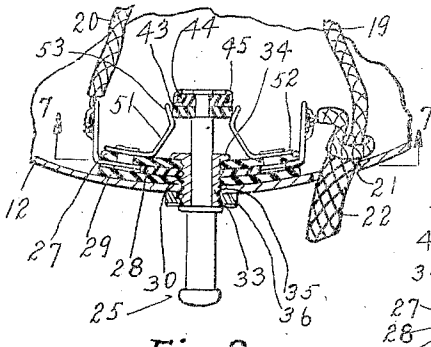

Fig. 2

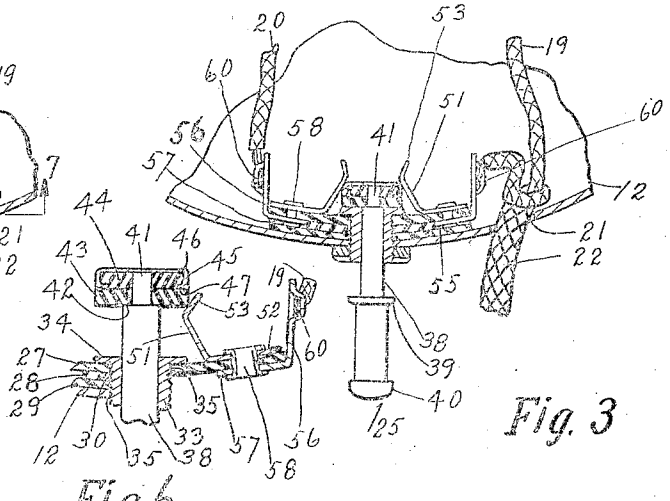

Fig. 3

Fig. 6

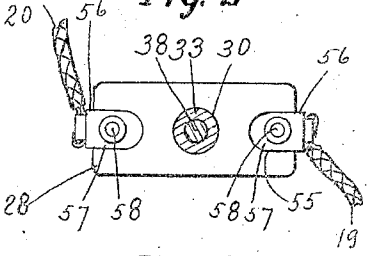

Fig. 7

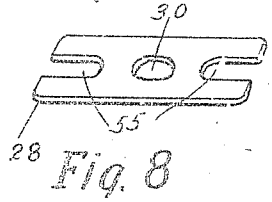

Fig. 8

Inventor:

Eugene A. Kuen,

by A. H. Herbsleb,

his Attorney

UNITED STATES PATENT OFFICE.

EUGENE A. KUEN, OF CINCINNATI, OHIO, ASSIGNOR TO THE THOS. J. CORCORAN LAMP COMPANY, OF CINCINNATI, OHIO, A CORPORATION OF OHIO.

ELECTRIC SWITCH.

1,417,925. Specification of Letters Patent. **Patented May 30, 1922.**

Application filed May 24, 1920. Serial No. 383,910.

To all whom it may concern:

Be it known that I, EUGENE A. KUEN, a citizen of the United States, residing at Cincinnati, in the county of Hamilton and State of Ohio, have invented certain new and useful Improvements in Electric Switches, of which the following is a specification.

My invention relates to electric switches, especially such as are applicable for use in connection with electric spot-lights for vehicles, such as automobiles, motor boats, and other vehicles.

It is the object of my invention to provide a switch which is readily operable in a relation such as that stated; further, to provide a switch which is readily assembled in novel manner; further, to provide novel means for applying a switch to the body of an electric spot-light; further, to provide novel means which readily adapt themselves in novel manner to the curvature of the body of a spot-light; and, further, to provide novel means whereby quick and effective electric contact is made in the switch, and whereby the contact may be made and broken with snap movements.

The invention will be further readily understood from the following description and claims, and from the drawing, in which latter:

Fig. 1 represents a perspective view of a spot-light showing my invention applied thereto.

Fig. 2 is an axial section of my improved device, taken on the line 2—2 of Fig. 1, showing the switch in open relation.

Fig. 3 is a similar view of the same, showing the switch in closed relation.

Fig. 4 is an inside end elevation of my improved device.

Fig. 5 is an outside end elevation of the same.

Fig. 6 is an axial section of the contact-end of the axially movable stem.

Fig. 7 is a cross-section, taken in the plane of the line 7—7 of Fig. 2; and,

Fig. 8 is a perspective view of the intermediate insulating layer.

The spot-light is indicated by the general reference numeral 11. It comprises an outer casing or body 12 of general parobolic form, which contains a suitable reflector 13 of general parobolic form, in which there is an electric light bulb 14 supported in a suitable manner. A closure 15, comprising a lens 16, is provided to close the front of the lamp.

Electric means are provided for the electric light bulb, shown as electric conductors 19, 20, connecting in suitable manner with the terminals of the bulb, and having woven insulation thereabout, the electric conductors with their insulation continuing through a hole 21 in the casing of the lamp as a flexible cable 22. One of the conductors is interrupted for the reception of a switch 25, which is secured to the wall of the body.

The switch comprises a base of insulating material. This base comprises the layers 27, 28, 29. Holes 30 are in the layers. These holes register with each other. A sleeve 33 is received through the holes, the sleeve having an annular shoulder 34 at one end thereof. The sleeve is also received through a hole 35 in the casing. The sleeve is threaded at its outer end, a nut 36 being received thereover and clamping the base-members and the wall of the casing together.

An axially slidable stem 38 is received through the sleeve. This stem has a limiting part thereon, shown as an annular flange 39, which acts as a stop to limit the inward movement of the stem. The stem is also provided with a handle or knob 40, by means of which the stem may be pulled outwardly, and the stem may be pushed inwardly by endwise pressure thereon. The stem is provided with an inner reduced end 41 forming an annular shoulder 42. An insulating washer 43, exemplified as a fiber disk, is received over this reduced end against the shoulder. An insulating washer 44, exemplified as a fiber disk, is provided with an electro-conductive periphery 45, exemplified for instance as a ring of copper which is provided with flanges 46, 47, at the respective sides of the disk for securing the same to the disk, and forms a conductive ring having an insulating body. This latter washer is received over the reduced end of the stem upon the washer 43, and the reduced end of the stem is upset or flattened for firmly securing the washers to the stem. The outward movement of the axially movable stem is limited by the insulating washer 43, which impinges the inner end of the sleeve 33.

Electro-conductive fingers 51, made preferably of spring electro-conductive material, are secured to the base. Each comprises a

bottom flange 52. The fingers extend toward each other at the respective sides of the axially movable stem and the washers. The free ends of these fingers are bent outwardly from each other, as shown at 53. The outward bends in the fingers correspond in position to the position of the outer edge of the insulating washer 43 on the stem, when the stem is pushed inwardly to its limit, to serve as separating means for the fingers. When the stem is pushed outwardly, the electro-conductive ring on the stem makes contact with the inclined inner faces of the fingers for forming electric connection between the fingers insulated from the stem and lighting the bulb.

One of the insulating layers of the base is provided with recesses 55. Terminal clips 56, are provided, and have flanges 57 received in the recesses. Holes register with each other and extend through one of the flanges 52 of the spring-fingers, through the outer insulating layer 27 of the base, and through one of the flanges 57 of the terminal clips, at each end of the base. An eyelet 58 is received through the registering holes and is fastened or upset for providing flanges at the respective ends of the eyelet, which rigidly hold the spring fingers, the terminal clips and the outer insulating layer of the base together, with the spring fingers and the terminal clips at the respective ends of the base in separated relation. The flanges of the terminal clips are received in the recesses 55 in the intermediate layer.

Each of the terminal clips has a portion of the metal thereof struck outwardly, for forming an eyelet 60, through which the electric conductors may be passed, and in which the end of the electric conductor may be clamped by flattening the struck-up portion of the clip upon the electric conductor. This struck-up portion is preferably intermediate in the width of the clip, so that the end of the electric conductor may be clamped to the clip at each side of the struck-up portion.

My improved construction provides means whereby the parts may be readily separately made, and be interchangeable, and whereby ready assembling of the parts may be obtained. In assembling the parts, the insulating layers of the base are placed one upon the other, with the spring fingers and terminal clips extending inwardly, the sleeve being passed through the central aperture in said layers of the base and through the hole in the body of the spot-light. The nut is then passed over the outer end of the axially movable stem, the bore of the nut being sufficiently large to do this readily, the nut being screwed over the outer threaded end of the sleeve.

Sufficient pressure is brought to bear by the nut upon the insulating layers of the base, which are exemplified as of fibrous material, for instance, hard fiber insulating material, so as to cause the layers of the base to conform in shape to the inner concavity of the parabolic or curved portion of the body, the layers of the base being sufficiently yieldable and shiftable with relation to each other to permit this effect. This bending of the layers of the base causes additional approach between the spring fingers, and added pressure between the inner ends of the spring fingers and the conducting washer of the switch. It further enhances snappy movement of the switch.

Sufficient force is necessary to either pull or push the axially movable stem to cause the washers to pass the contacting portions of the fingers with a quick and snappy movement.

Having thus fully described my invention, what I claim as new, and desire to secure by Letters Patent, is:

1. In a switch, the combination of a curved support, a base comprising a plurality of flexible insulating layers at the concave side of said support, contact-fingers secured at the respective ends of said base, a sleeve received through said support and the middles of said layers, an axially movable stem in said sleeve, said axially movable stem comprising an electro-conductive part and an insulating part between said fingers arranged to contact said fingers by opposite movements of said axially movable stem, and clamping means for said sleeve whereby to draw said sleeve outwardly and thereby to bend said flexible insulating layers into said concave side of said support to cause approach between said contact-fingers for increased pressure by the latter upon said electro-conductive part.

2. In a switch, the combination of a base comprising a plurality of insulating layers, electro-conductive fingers attached thereto in separated relation, a threaded sleeve received through said insulating layers between said electro-conductive fingers, said sleeve provided with a flange at one side of said layers, a nut threaded to said sleeve at the opposite side of said layers for clamping said insulating layers between said flange and said nut, an axially movable stem in said sleeve the axis whereof is located between said fingers, and an electro-conductive part and an insulating part on said stem arranged to respectively coact with said electro-conductive fingers by axial movements of said stem in opposite directions.

3. In a switch, the combination of a base comprising a plurality of insulating layers including outer layers and an intermediate layer, a pair of spring-fingers, each of said spring-fingers having a flange at one side of one of said outer layers, a pair of electro-

conductive clips, each of said clips having a flange at the other side of said last-named layer, the respective flanges of said spring-fingers and the respective flanges of said clips being at opposite ends of said layer, rivets passing through said layer connecting said flanges at said respective ends of said layer, said intermediate layer provided with recesses for the reception of said flanges of said clips, a sleeve passed through said layers between said spring-fingers, said sleeve provided with a flange at one side of said layers, means at the other side of said layers connecting with said sleeve for clamping said layers together, an axially movable stem in said sleeve, and an electro-conductive part and an insulating part on said stem arranged to respectively coact with said spring-fingers by opposite axial movements of said stem.

In testimony whereof, I have hereunto signed my name in the presence of two subscribing witnesses.

EUGENE A. KUEN.

In presence of—
JAMES J. FITZPATRICK,
DELMA WERNSING.