Oct. 8, 1946. M. H. BREDE 2,408,966

CARRYING POCKET FOR HEARING AIDS

Filed June 29, 1945

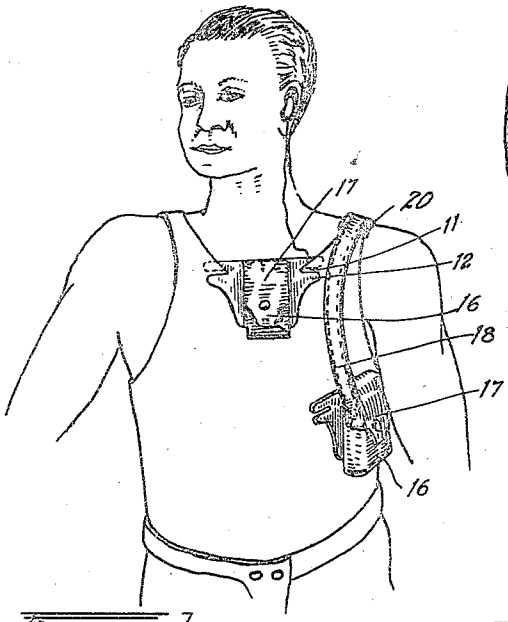

Fig. 1.

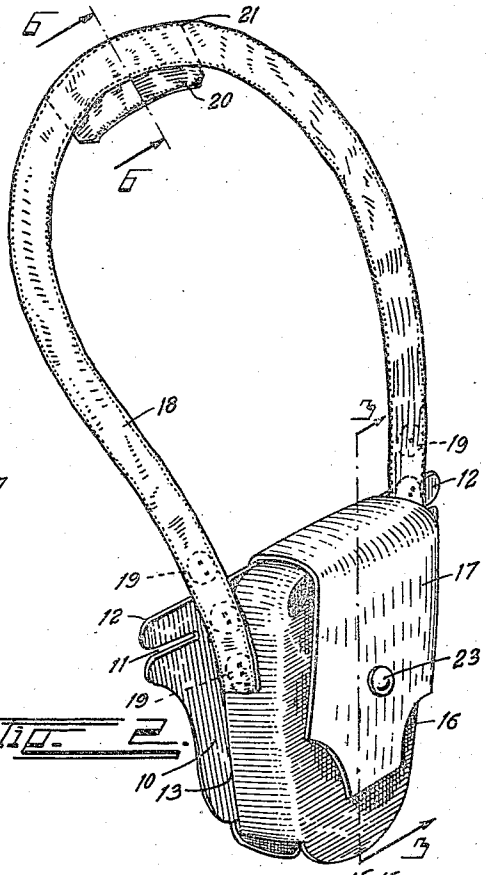

Fig. 2.

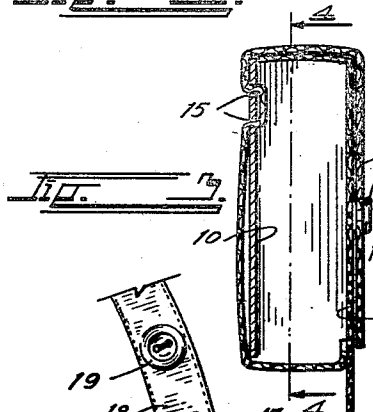

Fig. 3.

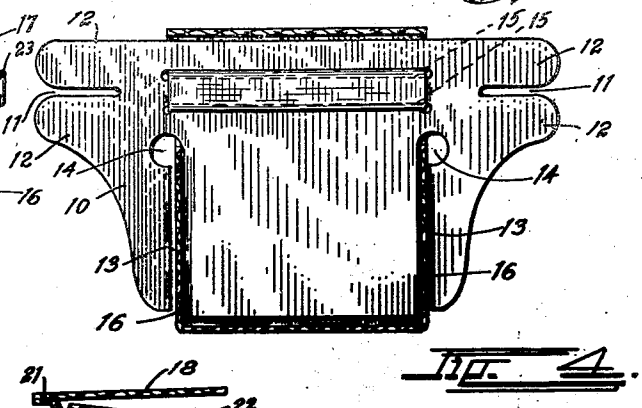

Fig. 4.

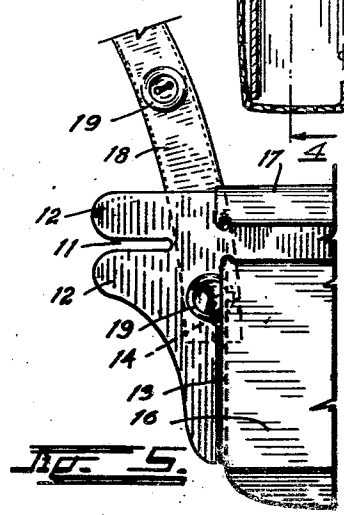

Fig. 5.

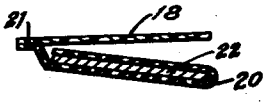

Fig. 6.

INVENTOR.
MARTIN H. BREDE.
BY
ATTORNEY.

Patented Oct. 8, 1946

2,408,966

UNITED STATES PATENT OFFICE

2,408,966

CARRYING POCKET FOR HEARING AIDS

Martin H. Brede, Denver, Colo.

Application June 29, 1945, Serial No. 602,393

2 Claims. (Cl. 224—5)

1

This invention relates to means for supporting the equipment of a hearing aid on the person and has for its principal object the provision of a neat, simple and comfortable device which will have no metallic parts so as to eliminate corrosion and static electric currents in the system.

Another object of the invention is to so construct it that it can be economically manufactured, easily assembled and adjusted to accommodate various sizes of batteries and various types of sets and which can be attached to the wearer's clothing without requiring pinning, perforating or other damage to the clothing or which can without change in construction be suspended from a secure and comfortable shoulder strap as desired.

Other objects and advantages reside in the detail construction of the invention, which is designed for simplicity, economy, and efficiency. These will become more apparent from the following description.

In the following detailed description of the invention, reference is had to the accompanying drawing which forms a part hereof. Like numerals refer to like parts in all views of the drawing and throughout the description.

In the drawing:

Fig. 1 illustrates the invention as it would appear in use, two different adaptations being shown;

Fig. 2 is an enlarged perspective view of the apparatus arranged for carrying a hearing aid battery from the wearer's shoulder;

Fig. 3 is a vertical section through the pocket of the device, taken on the line 3—3, Fig. 2;

Fig. 4 is a similar section, taken on the line 4—4, Fig. 3;

Fig. 5 is a fragmentary, rear view of the pocket illustrating the method of attaching the shoulder strap thereto; and

Fig. 6 is an enlarged detail section through the shoulder portion of the strap, taken on the line 6—6, Fig. 2.

The device employs a pocket supported from a backing plate 10 formed of plastic, fiber or other semi-rigid, non-metallic, sheet material. The backing plate is contoured to provide two outwardly projecting ears 12 in each of which an inwardly extending end slot 11 is formed. Two vertical slots 13 extend upwardly from the bottom of the plate 10 and terminate in enlarged button holes 14. Two parallel, horizontal slots 15 extend across the top of the plate 10.

The pocket is formed from any suitable, flexible sheet material, such as rubberized fabric or

2

Pliofilm. It comprises a pocket-like portion 16 closed at its sides and bottom. The back of the pocket portion 16 extends upwardly to form a top flap 17 which may be secured to the front of the pocket portion by means of a suitable snap fastener 23 or in any other desired manner.

The pocket portion is attached to the backing plate 10 by slipping it upwardly thereon with the two ends of the pocket extending into the vertical slots 13. The tab 17 is then first passed through the lowermost slot 15 thence upwardly and through the uppermost slot 15 to the back of the plate 10 thence over the top thereof. This forms a secure attachment without the necessity for stitching, stapling or other attachment devices. It also allows for adjustment since the depth of the pocket depends upon the position of the flap 17 in the slots 15.

The device as described can be attached to the wearer without further addition by simply slipping the edges of an arm hole or neck yoke of a garment through the end slots 11, as shown on the breast of the subject in Fig. 1. It can also be supported from a shoulder strap 18, the extremities of which carry a plurality of spaced-apart buttons 19 stitched or otherwise secured thereon.

The backing plate 10 is attached to the shoulder strap by simply slipping the button threads into the vertical slots 13 so that they will come to rest in the button holes 14, as shown in Fig. 5. The length of the strap can be adjusted by selection of the proper buttons 19.

A holding tab 20 is stitched at 21 along one side of the mid portion of the shoulder strap 18. The tab 20 is formed as a pocket to contain a stiffener 22 as shown in Fig. 6. The purpose of the tab is illustrated in Fig. 1, it being designed to slip under the shoulder strap of the wearer's undergarment to hold the shoulder strap 18 in proper place on the shoulder.

The device is interchangeable, that is, it can be used for supporting either or all the battery, the microphone, or the amplifying set of a standard hearing aid. The shoulder strap can be eliminated by attaching a battery pocket in the arm hole of a garment and the microphone set pocket in the neck yoke thereof without the use of straps. Or, if preferred, both the microphone set and batteries can be supported from straps without attachment to the garment in any way.

While a specific form of the improvement has been described and illustrated herein, it is desired to be understood that the same may be varied, within the scope of the appended claims,

without departing from the spirit of the invention.

Having thus described the invention, what is claimed and desired secured by Letters Patent is:

1. A carrying pocket for hearing aids comprising: a backing plate; vertical spaced-apart slots extending upwardly from the bottom of said backing plate; horizontal spaced-apart slots extending across the upper portion of said backing plate; a pocket, the ends of which are carried in the vertical slots; a closing flap for said pocket extending through said horizontal slots to lock the pocket to the backing plate; a shoulder strap; and means on the extremities of said shoulder strap engaging in the vertical slots of the backing plate for removably attaching the pocket thereto.

2. A carrying pocket for hearing aids comprising: a backing plate; vertical spaced-apart slots extending upwardly from the bottom of said backing plate; a pocket mounted on the face of said plate; a shoulder strap; buttons adjacent the extremities of said shoulder strap engaging in the vertical slots of the backing plate for removably attaching the plate thereto; and a holding tab hingedly secured to one edge of said shoulder strap intermediate its extremities so that it may lie in parallel relation thereto for underlapping and holding a portion of the wearer's garment against said strap.

MARTIN H. BREDE.